CORDIVARI®

CALORIFIERS
THERMAL STORAGE



EXPORT CATALOGUE

12

Cordivari boasts of a consolidated industrial tradition and is one of the most important Italian companies in the plumbing and heating sector. Founded in 1972 by Ercole Cordivari, the company specializes in the production of Calorifiers, Pressure Vessels, Solar Thermal and Heat Pumps Systems, Storage and Water Treatment Tanks, Chimney Pipes Systems and Decorative Radiators.

The four Cordivari manufacturing facilities cover an area of over 370,000 square meters and employ over 700 people.

To guarantee the total quality of our products, all of them are designed and Made in Italy, in the Cordivari's plants.

Thanks to development strategies oriented towards technological innovation and continuous staff training, Cordivari is equipped with modern systems and cutting-edge production processes. The technological, ergonomic and ecological choices allow to operate in full respect of people and environment, according to UNI EN ISO 14001 Environmental Management System and UNI EN ISO 45001 Occupational Health and Safety Standard in addition to the UNI EN ISO Quality System 9001, which guarantees the full quality and reliability of our products.

Cordivari's highly qualified management, the continuous search for innovative solutions and a strongly customer oriented approach, brought us today to serve more than 2.000 customers in 72 countries around the world, a market leadership position and an exclusive know-how in the production of Integrated Hydrothermal Systems.

The testimony of a continuous commitment aimed at achieving Customer Satisfaction.

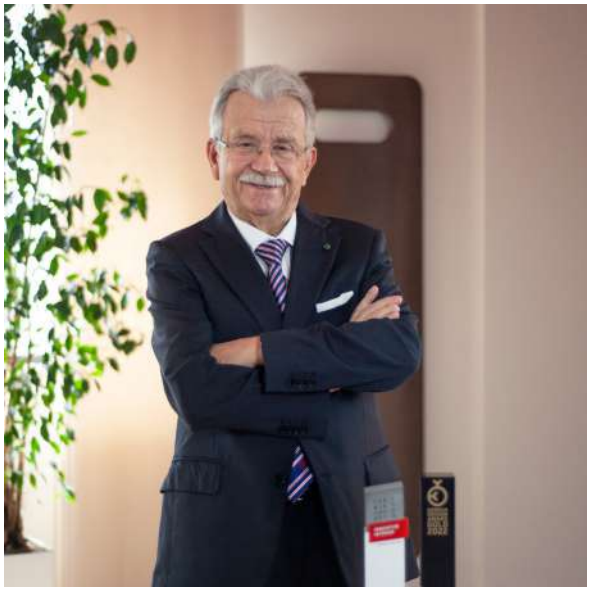

Cav. **Ercole Cordivari**

OUR EXPERTISE

100% MADE IN ITALY

Thanks to the experience gained over half a century of activity, Cordivari has contributed to the evolution of the industry by introducing innovative solutions focused on design, energy efficiency, and home comfort.

Cordivari has played a key role in the development of both the design and functionality of heating terminals through the introduction of technical, process, and material innovations. At the end of the 1980s, it was the first company to introduce a designer radiator made of stainless steel to the market, giving rise to an entire product line that, over the years, has become a “cult” within the industry and a distinctive hallmark of the company.

Over time, material research has been paired with ongoing exploration of design and finishes, always attentive to architectural trends and innovations in building technologies.
Today, Cordivari offers the most comprehensive range of radiators on the market, with over 100 available models that explore different raw materials and technologies, including solutions for low-temperature heating systems.

The Cordivari range includes everything from tubular radiators to towel warmers for bathrooms, from designer heating radiators to heat-emitting units created in collaboration with some of the most prestigious names in international design.




CORDIVARI
CORDIVARI
CORDIVARI

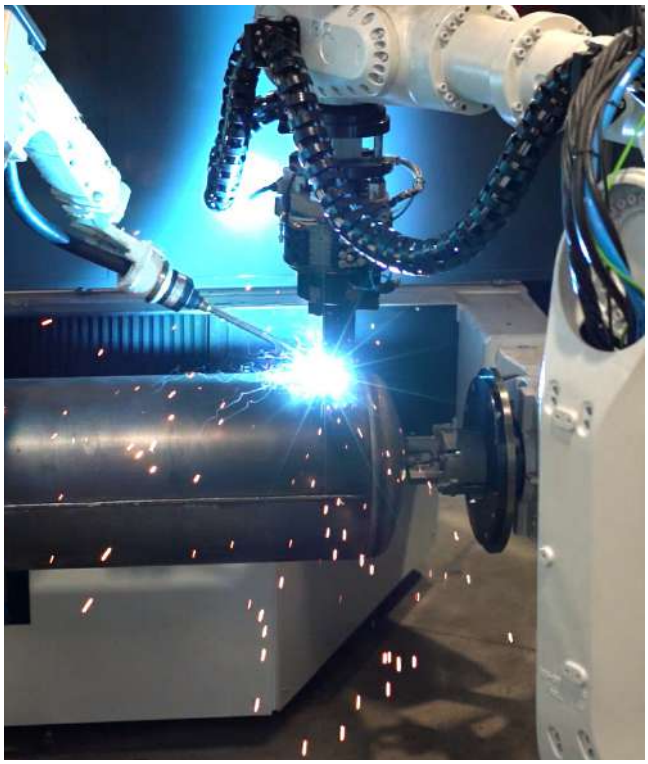



COMPLETE SOLUTIONS FOR YOUR GREENHOME

Cordivari, a leading company in the hydro-thermal systems sector, has continuously evolved, updated, and transformed itself, introducing - alongside its historic products - systems and solutions developed through extensive research and development activities, which today represent strategic assets for the company.

The company's manufacturing philosophy is oriented towards high-efficiency systems designed to optimize living comfort and the energy performance of buildings.
This is achieved through several business units that work in perfect synergy, such as the radiator and towel warmer division, solar thermal systems, water recovery and treatment systems, hot water storage tanks, and heat pump systems.

The company's vision - driven by a commitment to full responsibility and sustainability - is supported by an organizational structure and production processes that enable the development of efficient and sustainable products throughout their entire life cycle.
In designing and developing its market offering, Cordivari relies on patented solutions capable of combining comfort needs, energy performance, wellbeing, and savings, through the use of the best industrial technologies based on renewable energy sources and the responsible use of energy and environmental resources.





Heat pump systems and calorifiers

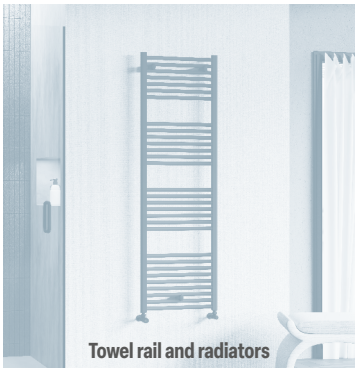

Towel rail and radiators

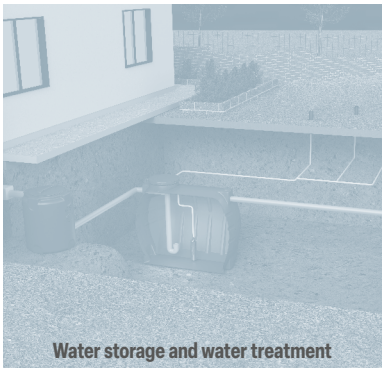

Water storage and water treatment

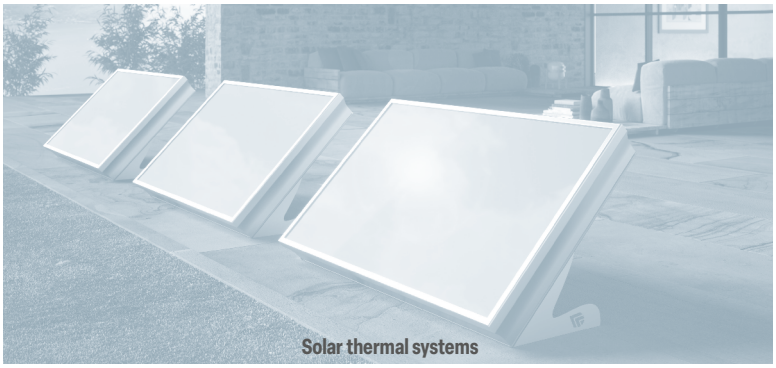

Solar thermal systems

RELIABILITY & PERFORMANCE

Choose peace of mind.
Today more than ever, those who choose a Cordivari product choose peace of mind and safety!

Since the first introduction of the ErP Ecodesign regulations, we have been committed to offering you guaranteed performance and reliability. The creation of the Cordivari LAB structure embodies this very commitment.

Since 2015, the company has been equipped with a high-tech laboratory and testing area capable of precisely testing any product or system, measuring and certifying its performance. Through rigorous, EU -regulated procedures and sophisticated instrumentation, Cordivari is the only Italian manufacturer capable of performing accurate, in-house tests on 100% of its products, fully in accordance with European standards.









CORDIVARI Lab

TÜV Rheinland Energie und Umwelt GmbH states that test procedures and Cordivari LAB are certified conforming to European standard EN 15332, as indicated by Ecodesign ErP Directive

QUALITY & SUSTAINABILITY

Every solution proposed by the company has always represented the synthesis of customer requirements, combining reliable technical choices, design, ergonomics, and ease of use and installation.

The continuous evolution of its product range demonstrates the company's constant focus on the needs of the market. Likewise, the research and development of new solutions are aligned with the evolving trends of a market increasingly oriented towards efficiency and energy savings.

This manufacturing philosophy, which has now become a true way of life for the company, translates into a reduction in emissions and energy inefficiency, a decrease in waste through sorting and recycling, and constant attention to product quality and to the safety of both employees and customers.

Thanks to these choices, the company is able to operate with respect for people and the environment. Cordivari uses clean energy from renewable sources and employs only recyclable, environmentally friendly materials, from raw materials through to packaging.



SILVER | Top 15%
ecovadis
Sustainability Rating
MAR 2025



ISO 9001
Quality Management System



ISO 14001
Environmental Management System



ISO 45001
Occupational Health and Safety System

Quality, Safety and Environmental Responsibility as Our Vision

Awareness to Safeguard the Future



Sustainability Report

Code of Conduct for Suppliers



Shared ethics with partners across the entire supply chain

Sustainability throughout the entire product life cycle



EPD compliant with ISO 14025

CORDIVARI

ICONS

Domestic Hot Water (D.H.W.)

Heating Water Production

Heating / Cooling

STOCK AVAILABILITY
Grey highlighted products are available on stock and can be dispatched in 1-5 working days.

HOW TO CHOOSE YOUR CALORIFIER

A calorifier is an indirect water heating appliance (i.e. one that features at least one heat exchanger) which accumulates heat so to control consumption rates that may vary greatly over a period of time, while also limiting the power used by the generators.

Cordivari offers a wide and varied range of calorifiers, thermal storages and heating components, to provide the most suitable product for different installations and also to allow simultaneous use of more energy sources.

Calorifiers with traditional boilers:
These products are designed for use with conventional boilers which use water as a heating medium in a sealed or open expansion circuit. The heat exchangers are designed to handle high flow rates on the primary side to ensure that the heat transfer will be efficient while at the same time avoiding excessively low return water temperatures.

Calorifiers with biomass boilers:
The selection of a calorifier while operating in conjunction with a biomass boiler must take account of fact that excessively low return water temperatures could reduce the lifespan of the boiler. In addition, a calorifier with a larger accumulation volume than normal will be more suitable as it will act as a buffer which will be beneficial to the biomass boiler.

Calorifiers with condensing boilers:
Condensing boilers are highly efficient and ecologically friendly. To obtain the best performance, the primary circuit should work at a limited temperature, and the return water temperature being as low as possible. This will ensure that the latent heat is extracted out of the combustion.

Calorifiers with solar systems:
The heat exchange coil surface area is a critical issue when interfacing solar thermal systems with calorifiers, due to limited primary flow rates and temperatures. The calorifier must also be capable of acting as a buffer to harness the solar energy throughout daylight hours.

Calorifiers with heat pumps:
Calorifiers operating in conjunction with air-to-water or water-to-water heat pumps must have oversized heat exchange surface areas to ensure that heat exchange will take place even when there is a limited difference in temperature between the primary circuit and stored water. This will maximise the COP (coefficiency of performance) of the heat pump.

Calorifiers with steam boilers:
The use of saturated steam as a heating medium to produce domestic hot water, although little used in the housing sector, is a solution which is still employed in industrial environments where the steam is already in use for the manufacturing process. Technically speaking, steam calorifiers are characterized by relatively small heat exchangers, as on one hand the steam gives high heat exchange coefficients and on the other hand the exchangers usually operate with considerable differences in temperature between the primary and secondary circuits. The use of steam demands a more stringent safety regeime than the use of low pressure hot water systems as steam boilers, depending on their capacity and design pressures, are classified as higher risk and therefore must comply with the European Pressure Equipment Directive.

Domestic hot water production (D.H.W.)

Calorifiers operating with more than one energy source
The demand to heat a calorifier using more than one energy source, while at the same time keeping the various circuits separate, has become much more common in recent times with the advent of renewable technologies which usually need to be backed-up with conventional boilers. In these cases, calorifiers with more heat exchangers are used, ensuring that excellent thermal stratification will be achieved with minimal interference between the various heat sources.

Calorifiers operating with electrical power
Cordivari products designed for working with electricity can be connected to A/C power supply.
Combined with a renewable energy power supply system (fotovoltaic, wind energy, and so on), it allows to have an environmental friendly system.

HOW TO CHOOSE YOUR STORAGE TANKS

Insulated storages are used in heating with the dual function of allowing the generator to operate in a regular manner, restricting the number of stoppages, and of creating a thermal stabiliser for the heating system, thus considerably improving efficiency.

Cordivari offers a wide range of storage tanks, which include both standard versions and several combined versions to be used as the same time as storage tank and to produce domestic hot water.

Central heating systems with one or more boilers which are plumbed together and do not generate domestic hot water.

Central heating systems with one or more boilers which are plumbed together in conjunction with solar power which is connected to either one or two coil type heat exchangers. Domestic hot water is not generated in these tanks.

Heating systems with one or more sources hydraulically divided, with the exploitation of the solar power and without DHW production.
These are heating systems powered by a biomass generator or more generators that are hydraulically divided.
The preparation of the DHW is done without involving the hot water storage tank.

Combined central heating system and domestic hot water production with one or more boilers which are plumbed together.

Combined central heating system and domestic hot water production with one or more boilers which are plumbed together, with solar thermal integration

Combined central heating system and domestic hot water production with one or more sources hydraulically divides and solar thermal integratio.

NEW BOLLYTERM® HOME R290

Efficiency, innovation and sustainability in a single system

BOLLYTERM HOME R290 is the Cordivari heat pump water heater, designed to ensure maximum energy efficiency, environmental sustainability and smart integration with photovoltaic systems.
Thanks to the use of environmentally friendly R290 refrigerant, which has a low environmental impact, the system ensures domestic hot water production up to 70 °C, with an energy class of A+ and a COP of up to 3.7*, reducing consumption and emissions.
Equipped with a WiFi controller, standard electronic control unit and patented design, BOLLYTERM HOME R290 allows remote control via the SmartLife® app, offering simple, intuitive and fully digital management of the system.

An ideal choice for new buildings and energy efficiency renovations.



NEW PIASTRATERM® MODULE

NEW RANGE OF Piastraterm® MODULES
for high- and low-temperature generators and heat pumps.

The new Cordivari Piastraterm® modules are plate heat exchanger systems for the production of domestic hot water (DHW), to be combined with a storage tank. Efficient both in heat transfer and storage, Piastraterm® ensures rapid availability of DHW and offers high versatility, as it can be connected to high- or low-temperature generators while always maintaining correct heat exchange.
The modules are compatible with Cordivari DHW storage tanks. The available combinations are designed to effectively meet different DHW production requirements, while at the same time ensuring simple and immediate installation.



NEW VOLANO CUBE®

Patented wall mounted hydraulic separator buffer tank with great thermal stratification capacity for heat pumps.

VOLANO CUBE® is the brand-new compact wall-mounted solution for heat pumps, usable as a thermal buffer tank or hydraulic separator, suitable for outdoor installations and capable of providing perfect stratification and protection from condensation.
The 8 side hydraulic connections allow the simultaneous use of two generators and two types of terminals (high and low temperature).

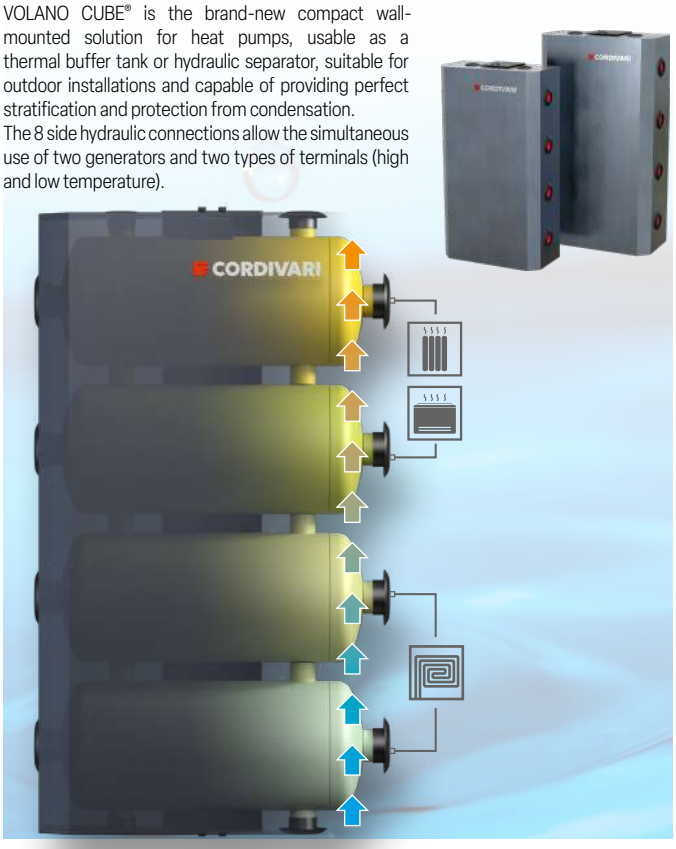

NEW RANGE OF SEPARATOR/BUFFER TANK FOR HEAT PUMP

Cordivari expands its outdoor wall-hung buffer tank range with new technopolymer-jacketed models.



Index

D.H.W. AND CLIMATE COMFORT

BOLLY® CALORIFIERS

CALORIFIERS FOR HEAT PUMP

BOLLYTERM® WATER HEATERS

EXTRA CALORIFIERS and D.HW. STORAGE

EXTRA INOX AND BOLLY INOX D.HW. STORAGE INOX

PLATE HEAT EXCHANGERS and D.H.W. ISTANTANEOUS SYSTEMS

PUFFER and COMBINED TANKS

HOT/ COLD BUFFER

BUFFER TANKS FOR HEAT PUMP CHILLED WATER STORAGE

PRESSURIZED TANKS

PRESSURE VESSELS and COMPRESSED AIR RECEIVERS

ACCESSORIES and TECHNICAL SUPPORT



14



78



116



128



190



260



312



364



404

432

BOLLY® CALORIFIERS RANGE

D.H.W. production





NEW


Model	BOLLY® ST FB	BOLLY® AP	BOLLY® XL	BOLLY® 2 XL R	BOLLY® HY XL
Page nr.	16	26	34	44	46
Application					
Heat exchangers	- Fixed heat exchanger	- Fixed heat exchanger	- Fixed heat exchanger	- Fixed heat exchanger	- Fixed heat exchanger - integrated energy buffer hot-cold
Number of heat exchangers					
Energy source					
Energy efficiency class	**B-C**	**A-B-C**	**A-B-C**	**B-C**	**A-B-C**
Insulation	- Polyurethane hard foam - Dismountable polyester fleece	- Polyurethane hard foam	- Polyurethane hard foam - Dismountable polyester fleece	- Polyurethane hard foam - Dismountable polyester fleece	- Polyurethane hard foam
Available range	150 ÷ 1500	150 ÷ 500	200 ÷ 1500	200÷ 1000	250 ÷ 500
Installation	floor standing	floor standing	floor standing	floor standing	floor standing
Suggested Application	Traditional, solar, biomass and condensation installations	Traditional, solar, biomass and condensation installations	Heat pump systems with optional solar thermal system integration	Traditional and heat pump installations	Traditional and heat pump installations with solar thermal system integration















BOLLY® 2 HY XL R	BOLLY® 2 HY DUO SOLAR	BOLLY® PDC	BOLLY® MURALE	BOLLY® PRIMO	INTERKA	INTERKA PANAREA
54	56	60	68	70	74	76
						
- Fixed heat exchanger - integrated energy buffer hot-cold	- Fixed heat exchanger - - integrated energy buffer hot-cold with heat exchanger	- Fixed heat exchanger - Counter-flow heat exchanger system	- Fixed heat exchanger	- Fixed heat exchanger	- Fixed heat exchanger	- Fixed heat exchanger
						
						
A-C	**C**	**A-B-C**	**B-C**	**B**	**C**	**B**
- Polyurethane hard foam - Dismountable polyester fleece	- Polyurethane hard foam	- Polyurethane hard foam	- Polyurethane hard foam	- Polyurethane hard foam	- Polyurethane hard foam	- Polyurethane hard foam + metal sheet protected by a anticorrosive treatment.
300÷ 500	250	300 ÷ 1000	80 ÷ 300	100 ÷ 300	80 ÷ 300	150 ÷ 300
floor standing	floor standing	floor standing	-vertical wall-mounted installation - horizontal wall-mounted installation	-vertical wall-mounted installation - horizontal wall-mounted installation - floor standing	-vertical wall-mounted installation - horizontal wall-mounted installation	Installed on the supporting framework of “PANAREA” natural circulation solar systems
Hybrid systems (heat pump and generator)	Heat pump installations with solar thermal system integration	Heat pump systems with optional solar and boiler integration	Traditional, solar, and biomass installations	Traditional, solar, and biomass installations	Traditional and biomass installations	Natural circulation solar thermal systems “PANAREA”

BOLLY® 1 ST FB

POLYWARM® COATED DOMESTIC HOT WATER CALORIFIER WITH 1 FIXED HEAT EXCHANGER



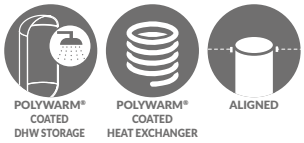

PROMPT AVAILABILITY

APPLICATION
Production and storage of domestic hot water (DHW).
All the connections are aligned on the front and on the back for quick and easy installation.

MATERIAL
Mild steel Polywarm® coated (Attestation ACS - EN 16421)

HEAT EXCHANGER
Nr. 1 mild steel Polywarm® coated heat exchanger.

INSULATION
HARD: High thermal insulation with ecological polyurethane hard foam.
SOFT (DISMOUNTABLE): NOFIRE® polyester fleece 100% made of recyclable material, with high thermal insulation. Fire resistance class B-s2d0 according to EN 13501. Grey PVC external lining.

CATHODE PROTECTION
Magnesium anode.

DRAIN
External confluence through drain connection. Models > 500 external confluence through drain connection.

GASKET- FLANGE PLATE
Silicone gaskets suitable for water intended for human consumption (tested according to 98/83/CE), max temperature up to 200°C. Mild steel inspection flange plate Polywarm® coated.

WARRANTY
5 years (See general sales conditions and warranty)

ACCESSORIES AND SPARE PARTS
See Accessories section for the entire list.





BOLLY® 1 ST FB WB
HARD FOAM INSULATION

Model	Art. Nr.	Heat exchangers surface [m²]	ErP ENERGY EFFICIENCY CLASS
150	3104162330041	0,6	B
200	3104162330042	0,8	B
300	3104162330043	1,2	B
400	3104162330044	1,5	C
500	3104162330045	1,8	C
800	3104162330046	2,7	B
1000	3104162330047	3,5	B
1500	3104162330048	3,8	C





BOLLY® 1 ST FB WC
DISMOUNTABLE SOFT FLEECE INSULATION

Model	Art. Nr.	Heat exchangers surface [m²]	ErP ENERGY EFFICIENCY CLASS
800	3103162321162	2,7	C
1000	3103162321163	3,5	C
1500	3103162321164	3,8	C

ACCESSORIES

ELECTRIC IMMERSION HEATERS

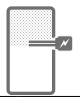

Mod.	Heated volume by electric immersion heater [lt]	MONOPHASE 1,5 kW	MONOPHASE 2 kW	MONOPHASE 3 kW	THREEPHASE 4 kW	THREEPHASE 5 kW	THREEPHASE 6 kW	THREEPHASE 9 kW	THREEPHASE 12 kW
		5240000000051	5240000000052	5240000000053	5240000000047	5240000000048	5240000000049	5240000000050	5240000000031
		Ignition time from 10 °C to 45 °C with electric immersion heaters [min]			Ignition time from 10 °C to 45 °C with electric immersion heaters [min]				
150	30	53	40	27	20	//	//	//	//
200	56	100	75	50	38	//	//	//	//
300	89	159	119	79	60	48	//	//	//
400	137	245	184	123	92	74	//	//	//
500	152	272	204	136	102	82	68	//	//
800	279	500	375	250	187	150	125	83	62
1000	345	618	464	309	232	185	155	103	77
1500	510	914	686	457	343	274	229	152	114

FULL CONTROL electronic unit (mounted on tank)

Art. Nr.	for models
5220280000004	WC
5220280000005	WB



For Class A models, only the version not pre-assembled on the tank is available.

Flange plate for electric immersion heater

See Accessories section



Electric immersion heater with internal thermostat (1,5 - 3 kW)

See Accessories section



Products designed and manufactured for using within temperature and pressure limits in accordance to Art. 4.3 Directive 2014/68/EU (P.E.D.)

BOLLY® 1 ST FB

POLYWARM® COATED DOMESTIC HOT WATER CALORIFIER WITH 1 FIXED HEAT EXCHANGER

	STORAGE		HEAT EXCHANGER	
Model	Pmax	Tmax	Pmax	Tmax
150 ÷ 800	10 bar	90 °C	12 bar	110 °C
1000 ÷ 1500	8 bar			

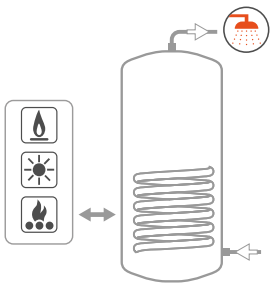

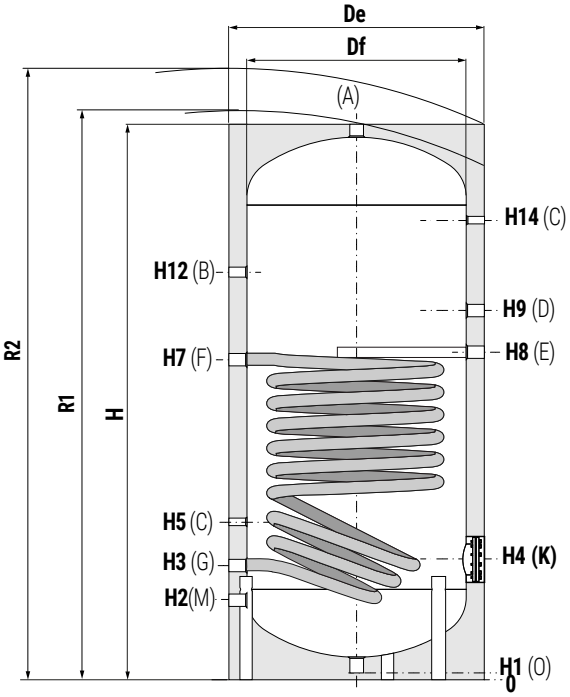

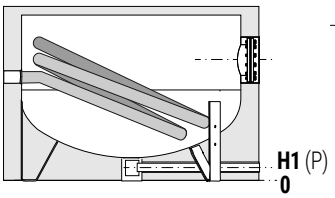

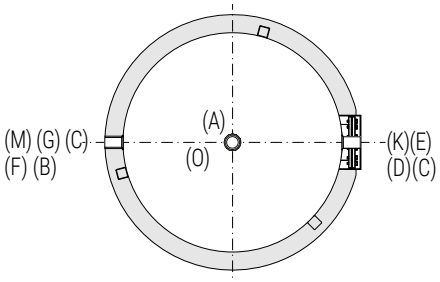

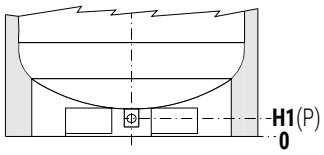

A	Domestic hot water outlet
B	Recirculation
C	Connection for instrumentation G 1/2" F
D	Connection for electric immersion heater
E	Connection for magnesium anode G 1"1/4 F
F	Lower heat exchanger inlet G 1"1/4 F
G	Lower heat exchanger outlet G 1"1/4 F
K	Flange for inspection
M	Domestic cold water circuit inlet
O	Drain G 1" 1/4 F for models ≤ 500
P	Drain for models > 500

Models 1500 are equipped with a practical **skirt** support which facilitate the handling with transpallets and forklifts. Also, discharge piping already mounted to allow **total emptying**.

BOLLY® 1 ST FB WB - HARD FOAM INSULATION

Model	Volume	Weight	De	H	R2	H1	H2	H3	H4	H5	H7	H8	H9	H12	H14	K	P	M	D	B	A
	[lt]	[kg]	[mm]														Connections F				
150	148	49	500	1414	1505	71	210	275	315	395	888	956	1086	1065	1185	Øi120/Øe180	-	3/4"	1"1/2	3/4"	1"1/4
200	189	55	550	1434	1540	71	220	285	325	405	811	855	985	1089	1195	Øi120/Øe180	-	3/4"	1"1/2	3/4"	1"1/4
300	291	67	650	1486	1630	71	246	311	381	431	832	871	1006	1101	1221	Øi120/Øe180	-	1"	1"1/2	1"	1"1/4
400	422	88	700	1766	1905	71	261	326	396	446	988	1033	1170	1286	1486	Øi120/Øe180	-	1"	1"1/2	1"	1"1/4
500	498	120	750	1786	1945	71	271	346	411	466	1036	1076	1211	1331	1476	Øi120/Øe180	-	1"	1"1/2	1"	1"1/4
800	789	184	900	2162	2350	101	338	428	483	548	1181	1243	1378	1598	1788	Øi170/Øe240	3/4"	1"	2"	1"	1"1/4
1000	1038	215	1000	2217	2440	89	359	439	499	559	1279	1309	1444	1584	1819	Øi170/Øe240	3/4"	1"1/4	2"	1"	1"1/2
1500	1443	389	1100	2415	2660	109	340	425	575	545	1403	1450	1585	1825	2065	Øi300/Øe380	1"	1"1/2	2"	1"	2"

Net volume data according to EN 15332 available on product label.

BOLLY® 1 ST FB WC - DISMOUNTABLE SOFT FLEECE INSULATION

Model	Volume	Weight	Df	De	H	R1	R2	H1	H2	H3	H4	H5	H7	H8	H9	H12	H14	K	P	M	D	B	A
	[lt]	[kg]	[mm]																Connections F				
800	789	184	750	950	2158	2194	2365	101	493	428	483	368	1181	1243	1378	1598	1788	Øi170/Øe240	3/4"	1"	2"	1"	1"1/4
1000	1038	215	850	1050	2192	2258	2435	89	524	439	499	389	1279	1309	1444	1584	1819	Øi170/Øe240	3/4"	1"1/4	2"	1"	1"1/2
1500	1443	389	950	1150	2440	2483	2705	109	450	425	575	375	1403	1450	1585	1825	2065	Øi300/Øe380	1"	1"1/2	2"	1"	2"

Net volume data according to EN 15332 available on product label.

Products designed and manufactured for using within temperature and pressure limits in accordance to Art. 4.3 Directive 2014/68/EU (P.E.D.)

BOLLY® **1 ST FB**

HEAT EXCHANGERS TECHNICAL DATA



Data have been calculated on following basis:
1) Primary circuit at T1 and proper energy source;
2) Production of DHW in continuous from 10 °C to t2;
3) DHW that can be taken in the first 10' and in the first hour from storage at t2, input 10 °C and output 45 °C;
4) Non-scaling sanitary water

LOWER
HEAT EXCHANGER

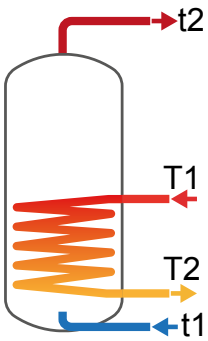

Model	Primary flow rate	Ignition time (minutes) from 10 °C to t2 and primary at T1				Maximum power exchange (kW) with primary at T1, secondary within 10-45 °C and constant use of DHW production				DHW continuous production lt/h within 10-45 °C and primary at T1HW production			
	[m³/h]	T1/t2				T1				T1			
		55/50	65/60	70/60	80/60	55	65	70	80	55	65	70	80
150	2	99	102	71	46	6,6	10	11,7	15,2	162	246	288	371
	1	111	116	81	53	6,1	9,1	10,6	13,2	149	223	260	336
200	2,5	92	95	66	43	9	13,5	15,8	20,5	220	332	389	506
	1,25	103	107	75	49	8,3	12,3	14,4	18,5	203	303	354	456
300	3	97	101	70	45	13,5	20,2	23,6	30,6	331	498	583	756
	1,5	106	111	78	51	12,5	18,5	21,5	27,5	307	455	529	680
400	3,5	105	110	76	50	16,9	25,4	29,6	38,3	416	625	731	947
	1,75	117	122	86	57	15,4	23,2	26,9	34,5	387	571	664	853
500	3,5	111	116	81	53	20,2	30,1	35,1	45,3	496	742	867	1121
	1,75	126	131	93	61	18,7	27,3	31,7	40,6	459	674	782	1000
800	6	116	120	84	55	30,3	45,4	53	68,6	746	1120	1309	1695
	3	131	136	96	64	28,2	41,4	48,1	61,6	692	1021	1186	1521
1000	6	114	119	84	56	38,9	57,9	67,5	87	958	1429	1667	2151
	3	132	138	98	65	35,5	52,2	60,4	77	882	1288	1492	1903
1500	6	162	168	119	78	41	61	71	91,5	1009	1504	1753	2261
	3	189	197	139	92	37,7	54,9	63,4	80,7	927	1352	1564	1993

Model	Primary flow rate	DHW produced in the first 10 minutes in lt/10' input 10 °C output 45 °C, storage at t2 and primary at T1				DHW produced in the first hour in lt/60' input 10 °C output 45 °C, storage at t2 and primary at T1				Heat exchanger pressure drop	
	[m³/h]	T1/t2				T1/t2				[mmH$_2$O]	[mbar]
		55/50	65/60	70/60	80/60	55/50	65/60	70/60	80/60		
150	2	195	251	258	272	298	407	440	507	218,85	21,46
	1	193	247	253	266	287	388	418	479	60,62	5,95
200	2,5	253	325	335	354	392	536	581	675	441,12	43,26
	1,25	250	321	329	346	378	512	553	635	122,19	11,98
300	3	388	499	513	542	597	814	882	1021	927,45	90,95
	1,5	384	492	504	529	578	780	839	960	256,91	25,19
400	3,5	550	706	723	759	814	1101	1186	1359	1480,67	145,20
	1,75	546	697	712	744	791	1058	1133	1284	410,16	40,22
500	3,5	651	834	855	897	965	1304	1404	1607	1850,84	181,50
	1,75	645	822	840	877	935	1249	1336	1510	512,70	50,28
800	6	1026	1314	1345	1410	1499	2023	2174	2483	1538,50	150,87
	3	1017	1297	1325	1381	1455	1944	2076	2344	426,18	41,79
1000	6	1345	1720	1759	1840	1952	2625	2815	3202	1994,35	195,58
	3	1332	1696	1730	1799	1891	2512	2675	3004	552,45	54,18
1500	6	1870	2378	2419	2504	2509	3330	3530	3936	2108,31	206,75
	3	1856	2352	2388	2459	2443	3209	3378	3722	584,02	57,27

HEAT EXCHANGERS PRESSURE DROP

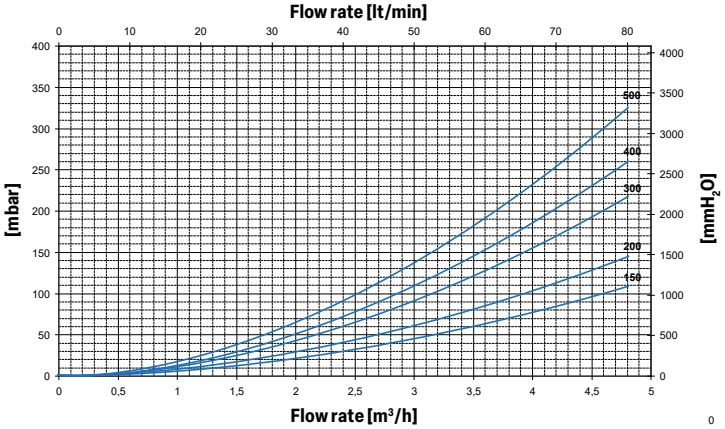

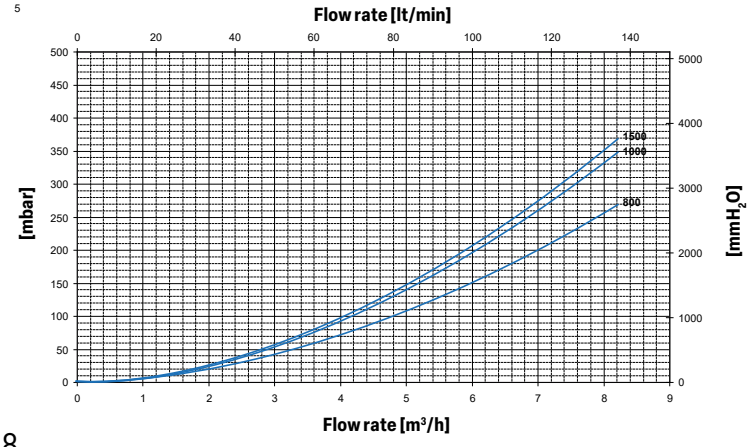

BOLLY® **1 ST FB**

HEAT EXCHANGERS TECHNICAL DATA



Heat Exchanger output referred to temperature and flow rate of primary circuit and with secondary at 10/45°C at maximum withdrawal of producible DHW (Upper limit of the curves referred to maximum primary flow rate in the heat exchanger, while the lower limit in the curves refer to the minimum primary flow rate).

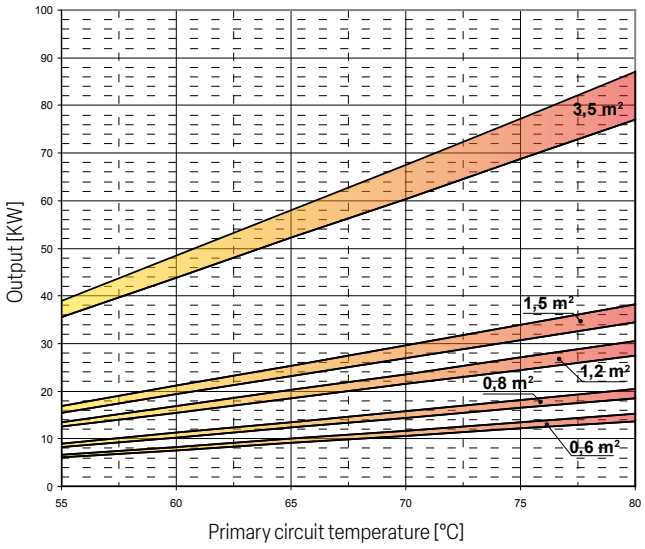

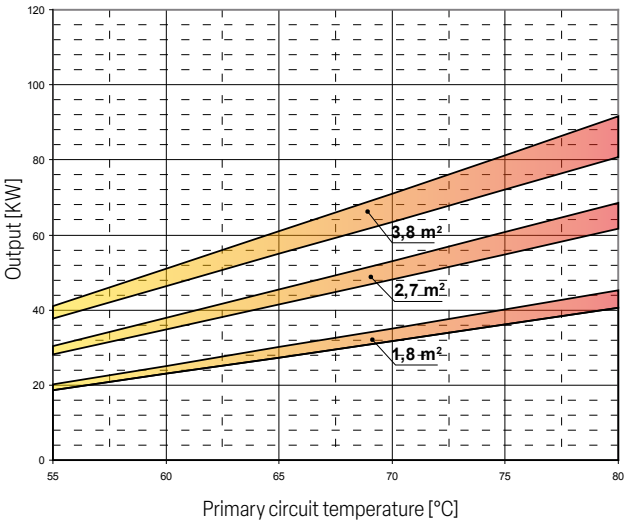

Heat exchanger	0,6 m²		0,8 m²		1,2 m²		1,5 m²		3,5 m²	
Flow rate [m³/h]	MAX	MIN	MAX	MIN	MAX	MIN	MAX	MIN	MAX	MIN
	2	1	2,5	1,25	3	1,5	3,5	1,75	6	3

Heat exchanger	1,8 m²		2,7 m²		3,8 m²	
Flow rate [m³/h]	MAX	MIN	MAX	MIN	MAX	MIN
	3,5	1,75	6	3	6	3

EXAMPLE OF INSTALLATION WITH **BOLLY® 1 ST FB**

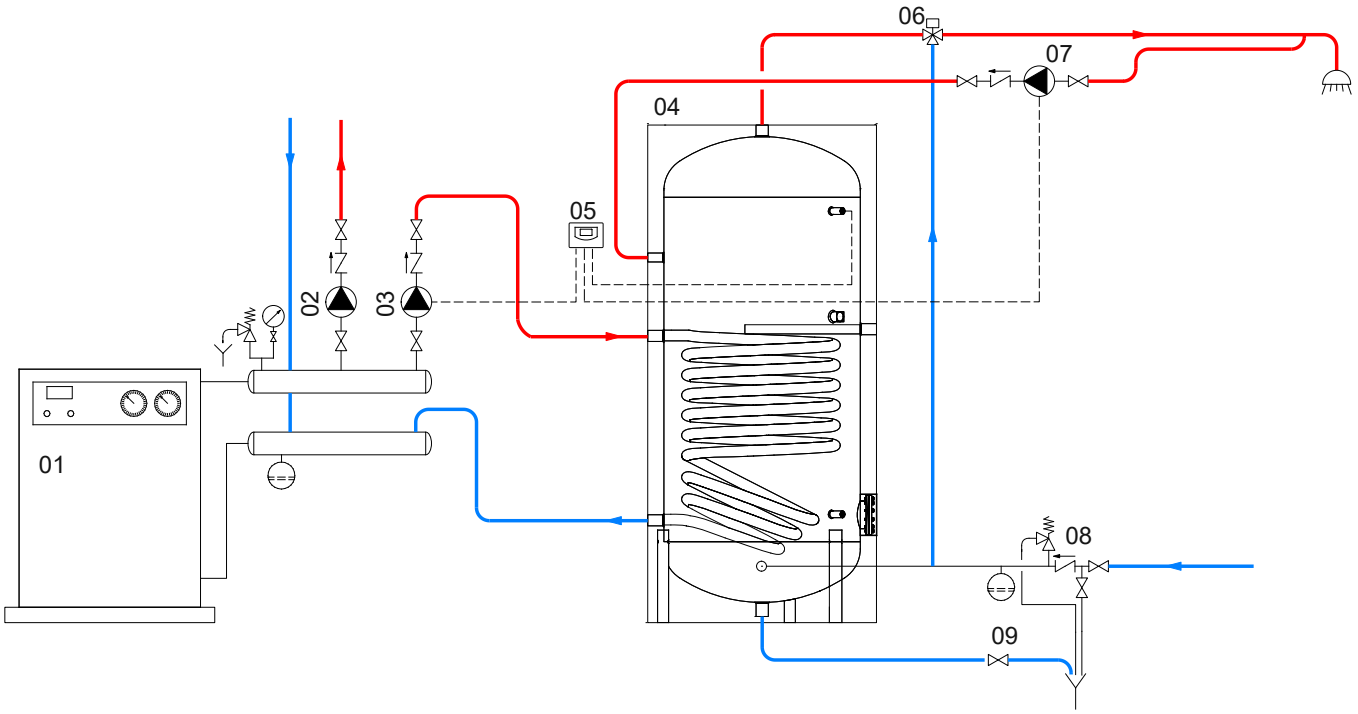

01	Generator	04	BOLLY® 1 ST FB	07	D.H.W. recirculation group
02	Heating system circulation group	05	FULL CONTROL electronic unit /thermostat	08	Hydraulic safety group
03	D.H.W. circulation group	06	Thermostatic mixing valve	09	Blowdown valve

The following schemes are purely illustrative. To realize the installation, always refer to a qualified technician.

BOLLY® **2 ST FB**

POLYWARM® COATED DOMESTIC HOT WATER CALORIFIER WITH 2 FIXED HEAT EXCHANGERS



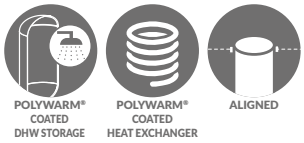

PROMPT AVAILABILITY

APPLICATION
Production and storage of domestic hot water (DHW).
All the connections are aligned on the front and on the back for quick and easy installation.

MATERIAL
Mild steel Polywarm® coated (Attestation ACS - EN 16421)

HEAT EXCHANGER
Nr. 2 Mild steel Polywarm® coated heat exchangers

INSULATION
HARD: High thermal insulation with ecological polyurethane hard foam.
SOFT (DISMOUNTABLE): NOFIRE® polyester fleece 100% made of recyclable material, with high thermal insulation. Fire resistance class B-s2d0 according to EN 13501. Grey PVC external lining.

CATHODE PROTECTION
Magnesium anode.

DRAIN
External confluence through drain connection. Models > 500 external confluence through drain connection.

GASKET- FLANGE PLATE
Silicone gaskets suitable for water intended for human consumption (tested according to 98/83/CE), max temperature up to 200°C. Mild steel inspection flange plate Polywarm® coated.

WARRANTY
5 years (See general sales conditions and warranty)

ACCESSORIES AND SPARE PARTS
See Accessories section for the entire list.

	Model	Art. Nr.	Heat exchangers surface [m²] Upper	Heat exchangers surface [m²] Lower	ErP ENERGY EFFICIENCY CLASS
BOLLY® 2 ST FB WB HARD FOAM INSULATION	**150**	3134162330011	0,4	0,6	**B**
	200	3134162330012	0,5	0,8	**B**
	300	3134162330013	0,7	1,2	**B**
	400	3134162330014	1	1,5	**C**
	500	3134162330015	1	1,8	**C**
	800	3134162330016	1,6	2,7	**B**
	1000	3134162330017	1,8	3,5	**B**
	1500	3134162330018	1,9	3,8	**C**
BOLLY® 2 ST FB WC DISMOUNTABLE SOFT FLEECE INSULATION	**800**	3138162320112	1,6	2,7	**C**
	1000	3138162320113	1,8	3,5	**C**
	1500	3138162320114	1,9	3,8	**C**

ACCESSORIES

ELECTRIC IMMERSION HEATERS

Mod.	Heated volume by electric immersion heater [lt]	MONOPHASE 1,5 kW	MONOPHASE 2 kW	MONOPHASE 3 kW	THREEPHASE 4 kW	THREEPHASE 5 kW	THREEPHASE 6 kW	THREEPHASE 9 kW	THREEPHASE 12 kW
		5240000000051	5240000000052	5240000000053	5240000000047	5240000000048	5240000000049	5240000000050	5240000000031
		Ignition time from 10 °C to 45 °C with electric immersion heaters [min]			Ignition time from 10 °C to 45 °C with electric immersion heaters [min]				
150	54	97	73	49	37	//	//	//	//
200	67	120	90	60	45	//	//	//	//
300	106	190	143	95	71	57	//	//	//
400	159	285	213	142	107	85	//	//	//
500	174	312	234	156	117	93	78	//	//
800	310	554	416	277	208	166	139	92	69
1000	390	698	524	349	262	210	175	116	87
1500	559	1002	751	501	376	301	250	167	125

FULL CONTROL electronic unit (mounted on tank)

Art. Nr.	for models
5220280000004	WC
5220280000005	WB



For Class A models, only the version not pre-assembled on the tank is available.

Flange plate for electric immersion heater

See Accessories section



Electric immersion heater with internal thermostat (1,5 - 3 kW)

See Accessories section



Products designed and manufactured for using within temperature and pressure limits in accordance to Art. 4.3 Directive 2014/68/EU (P.E.D.)

BOLLY® **2 ST FB**

POLYWARM® COATED DOMESTIC HOT WATER CALORIFIER WITH 2 FIXED HEAT EXCHANGERS

	STORAGE		HEAT EXCHANGER	
Model	Pmax	Tmax	Pmax	Tmax
150 ÷ 800	10 bar	90 °C	12 bar	110 °C
1000 ÷ 1500	8 bar			

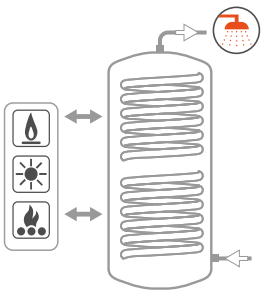

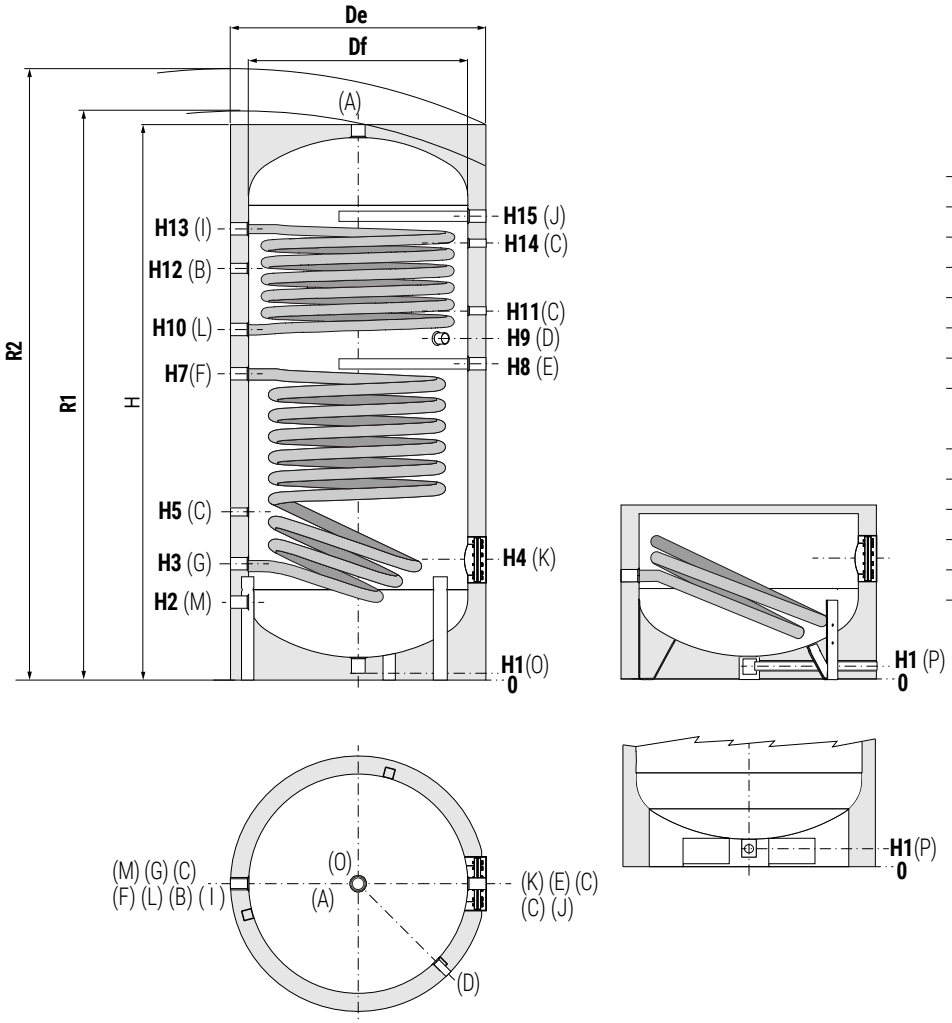

A	Domestic hot water outlet
B	Recirculation
C	Connection for instrumentation G 1/2" F
D	Connection for electric immersion heater
E	Connection for magnesium anode G 1"1/4 F
F	Lower heat exchanger inlet G 1"1/4 F
G	Lower heat exchanger outlet G 1"1/4 F
I	Upper heat exchanger inlet G 1"1/4 F
J	Connection for 2nd magnesium anode G 1"1/4 F (only for models >500)
K	Flange for inspection
L	Upper heat exchanger outlet G 1"1/4 F
M	Domestic cold water circuit inlet
O	Drain G 1" 1/4 F for models ≤ 500
P	Drain for models > 500

Models 1500 are equipped with a practical skirt support which facilitate the handling with transpallets and forklifts. Also, discharge piping already mounted to allow total emptying.

BOLLY® 2 ST FB WB - HARD FOAM INSULATION

Model	Volume	Weight	Df	De	H	R1	R2	H1	H2	H3	H4	H5	H6	H7	H8	H9	H10	H11	H12	H13	H14	H15	K	P	M	D	B	A
	[lt]	[kg]	[mm]																					Connections F				
150	148	54	-	500	1414	-	1505	71	210	275	315	395	//	765	815	885	945	975	1065	1185	1185	//	Ø120/Ø180	-	3/4"	1"1/2	3/4"	1"1/4
200	189	65	-	550	1434	-	1540	71	220	285	325	405	//	811	855	915	960	985	1089	1195	1195	//	Ø120/Ø180	-	3/4"	1"1/2	3/4"	1"1/4
300	291	83	-	650	1486	-	1630	71	246	311	381	431	//	832	871	931	981	1011	1101	1221	1221	//	Ø120/Ø180	-	1"	1"1/2	1"	1"1/4
400	422	112	-	700	1766	-	1905	71	261	326	396	446	//	988	1033	1091	1143	1166	1286	1486	1486	//	Ø120/Ø180	-	1"	1"1/2	1"	1"1/4
500	498	134	-	750	1786	-	1945	71	271	346	411	466	//	1036	1076	1144	1186	1206	1331	1476	1476	//	Ø120/Ø180	-	1"	1"1/2	1"	1"1/4
800	789	232	750	900	2163	-	2350	101	338	428	483	548	//	1181	1243	1308	1362	1378	1598	1770	1708	1818	Ø170/Ø240	3/4"	1"	2"	1"	1"1/4
1000	1038	272	850	1000	2217	-	2440	89	359	439	499	559	//	1279	1309	1364	1399	1444	1584	1819	1729	1839	Ø170/Ø240	3/4"	1"1/4	2"	1"	1"1/2
1500	1443	351	950	1100	2440	-	2685	109	340	425	575	545	//	1403	1450	1515	1550	1585	1825	2045	1965	2075	Ø300/Ø380	1"	1"1/2	2"	1"	2"

Net volume data according to EN 15332 available on product label.

BOLLY® 2 ST FB WC - DISMOUNTABLE SOFT FLEECE INSULATION

Model	Volume	Weight	Df	De	H	R1	R2	H1	H2	H3	H4	H5	H6	H7	H8	H9	H10	H11	H12	H13	H14	H15	K	P	M	D	B	A
	[lt]	[kg]	[mm]																					Connections F				
800	789	232	750	950	2163	2205	2365	101	338	428	483	548	//	1181	1243	1308	1362	1378	1598	1770	1708	1818	Ø170/Ø240	3/4"	1"	2"	1"	1"1/4
1000	1038	272	850	1050	2217	2270	2455	89	359	439	499	559	//	1279	1309	1364	1399	1444	1584	1819	1729	1839	Ø170/Ø240	3/4"	1"1/4	2"	1"	1"1/2
1500	1443	351	950	1150	2440	2500	2700	109	340	425	575	545	//	1403	1450	1515	1550	1585	1825	2045	1965	2075	Ø300/Ø380	1"	1"1/2	2"	1"	2"

Net volume data according to EN 15332 available on product label.

Products designed and manufactured for using within temperature and pressure limits in accordance to Art. 4.3 Directive 2014/68/EU (P.E.D.)

BOLLY® **2 ST FB**

HEAT EXCHANGERS TECHNICAL DATA



Data have been calculated on following basis:
1) Primary circuit at T1 and proper energy source;
2) Production of DHW in continuous from 10 °C to t2;
3) DHW that can be taken in the first 10' and in the first hour from storage at t2, input 10 °C and output 45 °C;
4) Non-scaling sanitary water

UPPER
HEAT EXCHANGER

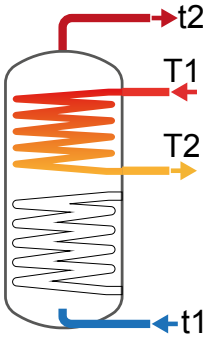

Model	Primary flow rate	Ignition time (minutes) from 10 °C to t2 and primary at T1				Maximum power exchange (kW) with primary at T1, secondary within 10-45 °C and constant use of DHW production				DHW continuous production lt/h within 10-45 °C and primary at T1HW production			
	[m^3/h]	T1/t2				T1				T1			
		55/50	**65/60**	**70/60**	**80/60**	**55**	**65**	**70**	**80**	**55**	**65**	**70**	**80**
150	2	47	49	34	22	4,5	6,8	7,9	10,3	109	165	194	254
	1	52	64	38	24	4,1	6,2	7,2	9,4	100	151	177	231
200	2,5	46	48	33	21	5,7	8,6	10	13,1	138	210	247	322
	1,25	51	53	37	24	5,3	7,9	9,3	12	129	194	227	296
300	3	51	53	37	24	8	12,1	14,1	18,4	195	296	347	453
	1,5	57	59	41	27	7,5	11,2	13,1	16,9	183	274	321	416
400	3,5	55	57	40	26	11,4	17,2	20,2	26,2	279	423	496	646
	1,75	61	63	44	29	10,7	16	18,6	24	262	392	458	592
500	3,5	61	64	44	29	11,4	17,2	20,2	26,2	279	423	496	646
	1,75	68	70	49	32	10,7	16	18,6	24	262	392	458	592
800	6	68	71	49	32	18,3	27,6	32,3	41,9	447	677	794	1034
	3	75	78	54	36	17,2	25,6	29,8	38,5	419	628	733	949
1000	6	79	82	57	37	20,5	30,9	36,1	46,9	501	759	889	1157
	3	87	91	64	42	19,2	28,5	33,3	42,9	469	701	818	1057
1500	6	87	90	63	41	26	39	45,6	59,1	636	959	1123	1457
	3	97	102	71	46	24,2	35,8	41,6	53,6	592	879	1024	1318

Model	Primary flow rate	DHW produced in the first 10 minutes in lt/10' input 10 °C output 45 °C, storage at t2 and primary at T1				DHW produced in the first hour in lt/60' input 10 °C output 45 °C, storage at t2 and primary at T1				Heat exchanger pressure drop	
	[m^3/h]	T1/t2				T1/t2				[mmH_2O]	[mbar]
		55/50	**65/60**	**70/60**	**80/60**	**55/50**	**65/60**	**70/60**	**80/60**		
150	2	73	96	101	111	142	201	224	272	145,90	14,31
	1	72	94	98	107	135	189	210	253	40,41	3,96
200	2,5	92	121	127	139	179	254	283	343	275,70	27,04
	1,25	90	118	124	135	172	241	267	323	76,37	7,49
300	3	141	185	194	211	265	373	413	498	541,01	53,06
	1,5	139	181	189	205	255	355	393	469	149,87	14,70
400	3,5	211	276	288	313	388	544	603	723	1028,24	100,84
	1,75	208	271	282	304	374	519	572	679	284,83	27,93
500	3,5	229	299	311	336	406	567	625	745	1028,24	100,84
	1,75	227	294	305	327	392	542	595	702	284,83	27,93
800	6	401	521	541	581	684	950	1044	1236	911,70	89,41
	3	397	513	531	567	662	911	995	1168	252,55	24,77
1000	6	508	657	678	723	825	1137	1241	1456	1025,66	100,58
	3	502	647	666	706	799	1091	1184	1376	284,12	27,86
1500	6	691	891	919	974	1094	1499	1630	1897	1310,57	128,52
	3	684	878	902	951	1059	1435	1551	1786	363,04	35,60

BOLLY® **2 ST FB**

HEAT EXCHANGERS TECHNICAL DATA



Data have been calculated on following basis:
1) Primary circuit at T1 and proper energy source;
2) Production of DHW in continuous from 10 °C to t2;
3) DHW that can be taken in the first 10' and in the first hour from storage at t2, input 10 °C and output 45 °C;
4) Non-scaling sanitary water

LOWER
HEAT EXCHANGER

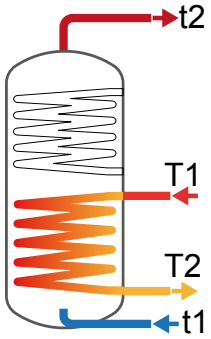

Model	Primary flow rate	Ignition time (minutes) from 10 °C to t2 and primary at T1				Maximum power exchange (kW) with primary at T1, secondary within 10-45 °C and constant use of DHW production				DHW continuous production lt/h within 10-45 °C and primary at T1HW production			
	[m³/h]	T1/t2				T1				T1			
		55/50	65/60	70/60	80/60	55	65	70	80	55	65	70	80
150	2	99	102	71	46	6,6	10	11,7	15,2	162	246	288	371
	1	111	116	81	53	6,1	9,1	10,6	13,2	149	223	260	336
200	2,5	92	95	66	43	9	13,5	15,8	20,5	220	332	389	506
	1,25	103	107	75	49	8,3	12,3	14,4	18,5	203	303	354	456
300	3	97	101	70	45	13,5	20,2	23,6	30,6	331	498	583	756
	1,5	106	111	78	51	12,5	18,5	21,5	27,5	307	455	529	680
400	3,5	105	110	76	50	16,9	25,4	29,6	38,3	416	625	731	947
	1,75	117	122	86	57	15,4	23,2	26,9	34,5	387	571	664	853
500	3,5	111	116	81	53	20,2	30,1	35,1	45,3	496	742	867	1121
	1,75	126	131	93	61	18,7	27,3	31,7	40,6	459	674	782	1000
800	6	116	120	84	55	30,3	45,4	53	68,6	746	1120	1309	1695
	3	131	136	96	64	28,2	41,4	48,1	61,6	692	1021	1186	1521
1000	6	114	119	84	56	38,9	57,9	67,5	87	958	1429	1667	2151
	3	132	138	98	65	35,5	52,2	60,4	77	882	1288	1492	1903
1500	6	162	168	119	78	41	61	71	91,5	1009	1504	1753	2261
	3	189	197	139	92	37,7	54,9	63,4	80,7	927	1352	1564	1993

Model	Primary flow rate	DHW produced in the first 10 minutes in lt/10' input 10 °C output 45 °C, storage at t2 and primary at T1				DHW produced in the first hour in lt/60' input 10 °C output 45 °C, storage at t2 and primary at T1				Heat exchanger pressure drop	
	[m³/h]	T1/t2				T1/t2				[mmH$_2$O]	[mbar]
		55/50	65/60	70/60	80/60	55/50	65/60	70/60	80/60		
150	2	195	251	258	272	298	407	440	507	218,85	21,46
	1	193	247	253	266	287	388	418	479	60,62	5,95
200	2,5	253	325	335	354	392	536	581	675	441,12	43,26
	1,25	250	321	329	346	378	512	553	635	122,19	11,98
300	3	388	499	513	542	597	814	882	1021	927,45	90,95
	1,5	384	492	504	529	578	780	839	960	256,91	25,19
400	3,5	550	706	723	759	814	1101	1186	1359	1480,67	145,20
	1,75	546	697	712	744	791	1058	1133	1284	410,16	40,22
500	3,5	651	834	855	897	965	1304	1404	1607	1850,84	181,50
	1,75	645	822	840	877	935	1249	1336	1510	512,70	50,28
800	6	1026	1314	1345	1410	1499	2023	2174	2483	1538,50	150,87
	3	1017	1297	1325	1381	1455	1944	2076	2344	426,18	41,79
1000	6	1345	1720	1759	1840	1952	2625	2815	3202	1994,35	195,58
	3	1332	1696	1730	1799	1891	2512	2675	3004	552,45	54,18
1500	6	1870	2378	2419	2504	2509	3330	3530	3936	2108,31	206,75
	3	1856	2352	2388	2459	2443	3209	3378	3722	584,02	57,27

BOLLY® **2 ST FB**

UPPER HEAT EXCHANGERS PRESSURE DROP



Heat exchangers surface [m²]	
150	0,4
200	0,5
300	0,7
400	1
500	1
800	1,6
1000	1,8
1500	1,9

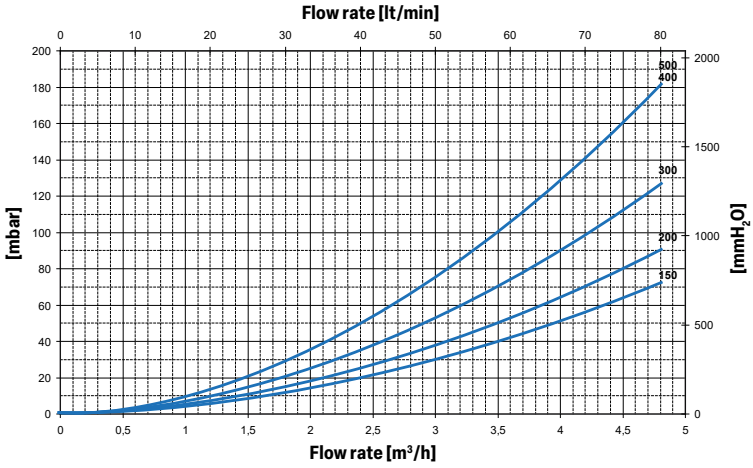

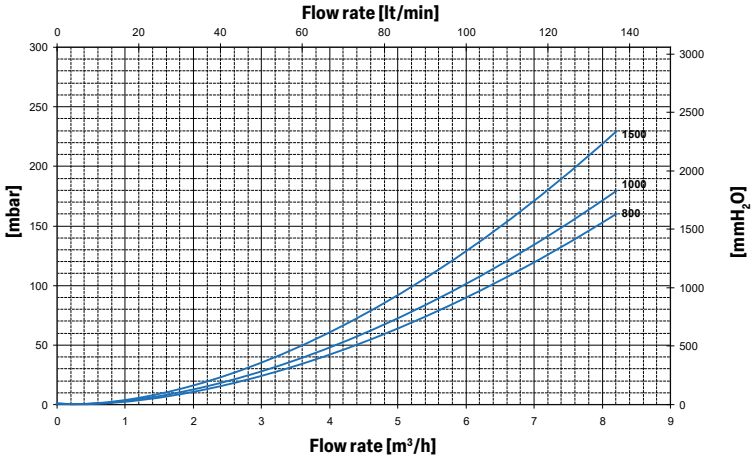

LOWER HEAT EXCHANGERS PRESSURE DROP

Heat exchangers surface [m²]	
150	0,6
200	0,8
300	1,2
400	1,5
500	1,8
800	2,7
1000	3,5
1500	3,8

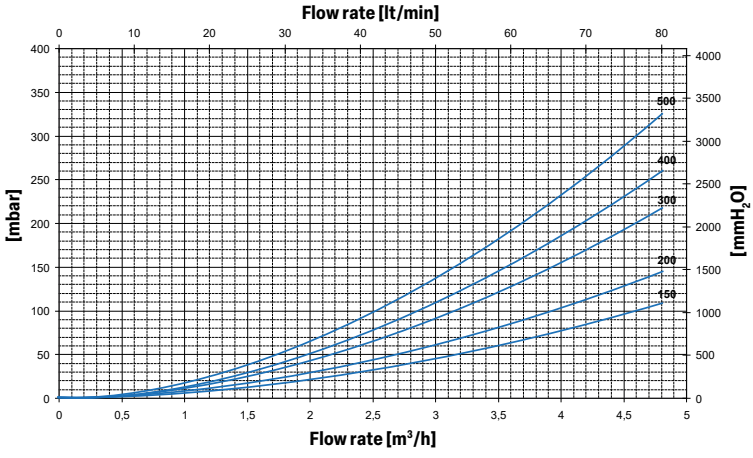

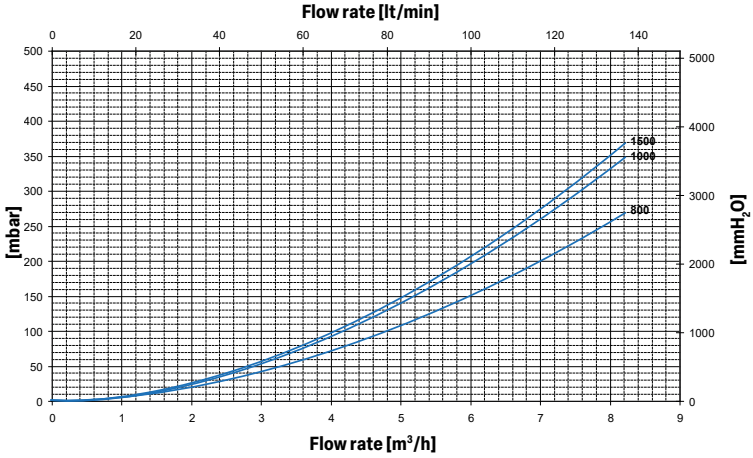

BOLLY® **2 ST FB**

UPPER HEAT EXCHANGERS TECHNICAL DATA



Heat Exchanger output referred to temperature and flow rate of primary circuit and with secondary at 10/45°C at maximum withdrawal of producible DHW (Upper limit of the curves referred to maximum primary flow rate in the heat exchanger, while the lower limit in the curves refer to the minimum primary flow rate).
For Lower heat exchangers technical data- see BOLLY® 1 ST

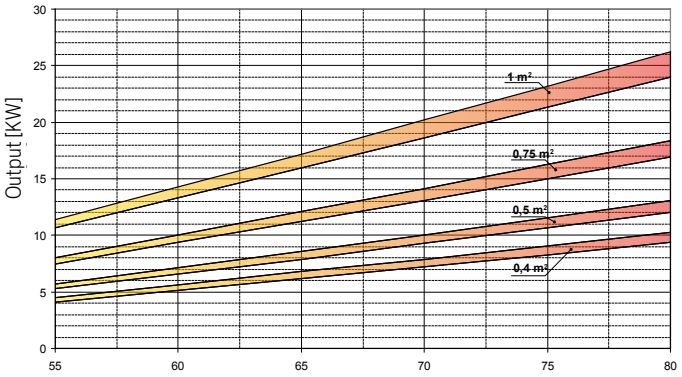

Heat exchanger	**0,4 m²**		**0,5 m²**		**0,75 m²**		**1 m²**	
Flow rate [m³/h]	MAX	MIN	MAX	MIN	MAX	MIN	MAX	MIN
	2	1	2,5	1,25	3	1,5	3,5	1,75

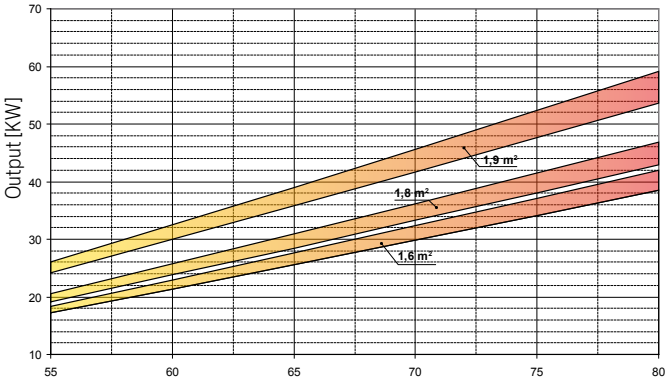

Heat exchanger	**1,6 m²**		**1,8 m²**		**1,9 m²**	
Flow rate [m³/h]	MAX	MIN	MAX	MIN	MAX	MIN
	6	3	6	3	6	3

FOR LOWER HEAT EXCHANGERS TECHNICAL DATA- SEE BOLLY® 1 ST

EXAMPLE OF INSTALLATION WITH **BOLLY® 2 ST FB**

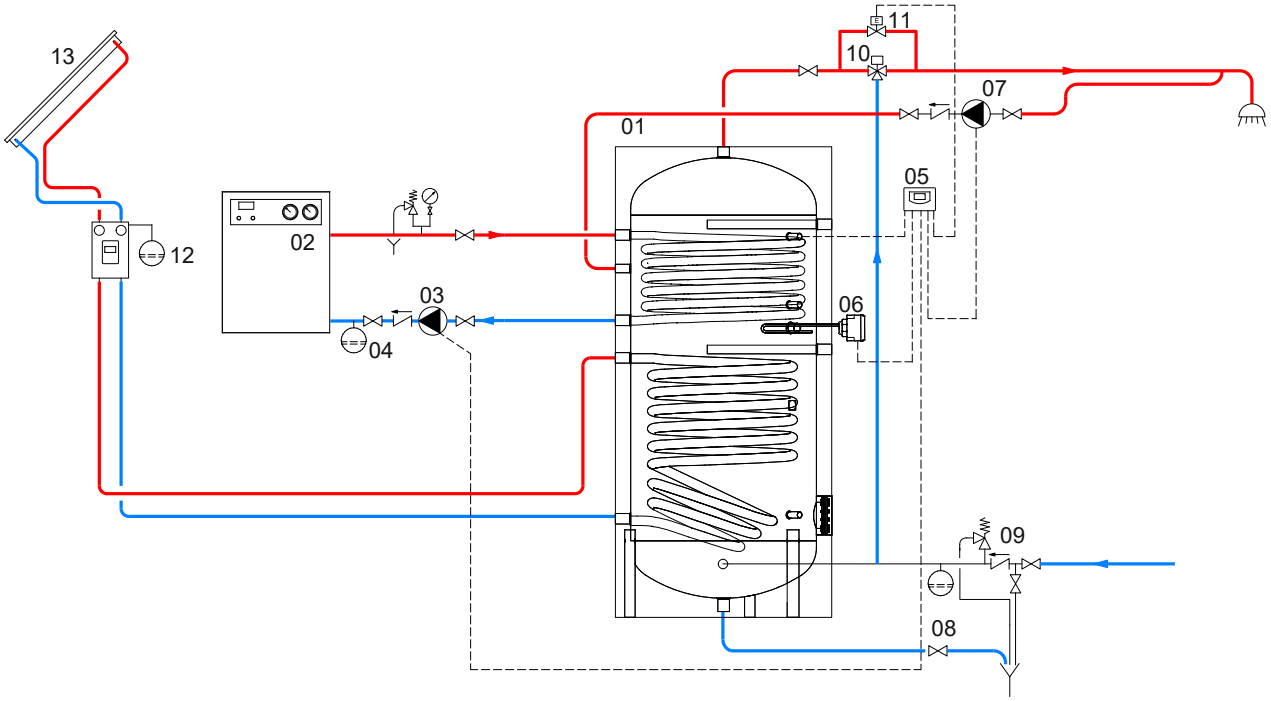

1	Bolly® 2 ST FB	5	FULL CONTROL electronic unit / thermostat	9	Hydraulic safety group	13	Solar panels
2	Generator	6	Electric immersion heater (optional)	10	Thermostatic mixing valve		
3	Circulation group	7	D.H.W. recirculation group	11	By-pass solenoid valve		
4	Expansion vessel	8	Blowdown valve	12	Solar system circulation group		

The following schemes are purely illustrative. To realize the installation, always refer to a qualified technician.

BOLLY® 1 AP - HIGH PERFORMANCES

POLYWARM® COATED DOMESTIC HOT WATER CALORIFIER WITH 1 FIXED HEAT EXCHANGER



POLYWARM® COATED DHW STORAGE

POLYWARM® COATED HEAT EXCHANGER

ALIGNED

PROMPT AVAILABILITY

APPLICATION
Production and storage of domestic hot water (DHW).
All the connections are aligned on the front and on the back for quick and easy installation.

MATERIAL
Mild steel Polywarm® coated (Attestation ACS - EN 16421)

HEAT EXCHANGER
1 Mild steel Polywarm® coated heat exchanger.

INSULATION
HARD: High thermal insulation with ecological polyurethane hard foam.
HARD FOAM (CLASS "A" MODELS): hard polyurethane foam for high thermal insulation with a vacuum sheet of highly insulating material.
Grey PVC external lining.

CATHODE PROTECTION
Magnesium anode.

DRAIN
External confluence through drain connection.

GASKET- FLANGE PLATE
Silicone gaskets suitable for water intended for human consumption (tested according to 98/83/CE), max temperature up to 200°C. Mild steel inspection flange plate Polywarm® coated and connection for electric immerion heater.

WARRANTY
5 years (See general sales conditions and warranty)

ACCESSORIES AND SPARE PARTS:
See Accessories section for the entire list.

	Model	Art. Nr.	Heat exchangers surface [m²]	ErP ENERGY EFFICIENCY CLASS
BOLLY® 1 AP WB HARD FOAM INSULATION	150	3104162330031	1,1	B
	200	3104162330032	1,3	B
	300	3104162330033	1,8	B
	400	3104162330034	2	C
	500	3104162330035	2,6	C
BOLLY® 1 AP WB Class A HARD FOAM INSULATION	200	3104162330054	1,3	A
	300	3104162330055	1,8	A
	500	3104162330056	2,6	A

ACCESSORIES

ELECTRIC IMMERSION HEATERS



Mod.	Position electric immersion heater	Heated volume by electric immersion heater [lt]	MONOPHASE 1,5 kW	MONOPHASE 2 kW	MONOPHASE 3 kW	THREEPHASE 4 kW	THREEPHASE 5 kW	THREEPHASE 6 kW
			5240000000051	5240000000052	5240000000053	5240000000047	5240000000048	5240000000049
			Ignition time from 10 °C to 45 °C with electric immersion heaters [min]			Ignition time from 10 °C to 45 °C with electric immersion heaters [min]		
150	1	125	223	167	112	//	//	//
	2	48	86	65	43	32	//	//
200	1	159	285	214	142	//	//	//
	2	62	111	83	56	42	//	//
300	1	235	421	316	210	158	//	//
	2	73	132	99	66	49	39	//
400	1	353	632	474	316	237	//	//
	2	132	237	178	119	89	71	//
500	1	413	741	555	370	278	222	//
	2	150	269	202	135	101	81	67

FULL CONTROL electronic unit (mounted on tank)

Art. Nr.	for models
5220280000005	WB



For Class A models, only the version not pre-assembled on the tank is available.

HEAT MANAGER + electric immersion heater 1,5 kW + probe +3m cable

Art. Nr.	Output [kW]
5240000000074	1,5
5240000000075	2
5240000000076	3



Titanium anode

See Accessories section



Products designed and manufactured for using within temperature and pressure limits in accordance to Art. 4.3 Directive 2014/68/EU (P.E.D.)

BOLLY® **1 AP** - HIGH PERFORMANCES

POLYWARM® COATED DOMESTIC HOT WATER CALORIFIER WITH 1 FIXED HEAT EXCHANGER

STORAGE		HEAT EXCHANGER	
Pmax	Tmax	Pmax	Tmax
10 bar	90 °C	12 bar	110 °C

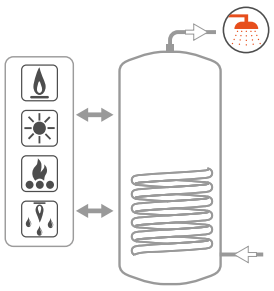

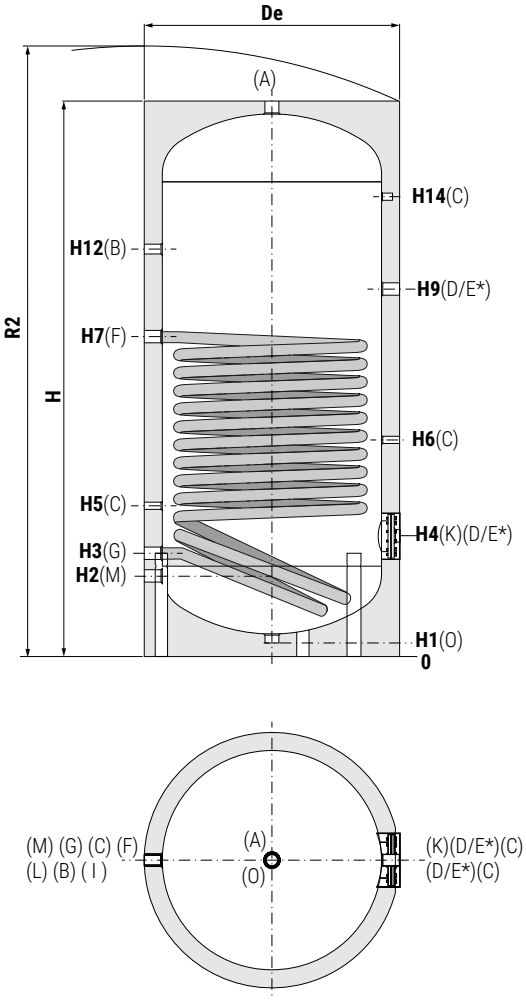

A	Domestic hot water outlet
B	Recirculation
C	Connection for instrumentation G 1/2" F
D	Connection for electric immersion heater
E*	Connection for magnesium anode G 1"1/4 F - Use a reducing fitting 1"1/2-1"1/4
F	Lower heat exchanger inlet G 1"1/4 F
G	Lower heat exchanger outlet G 1"1/4 F
K	Flange for inspection
M	Domestic cold water circuit inlet
O	Drain G 1" 1/4 F

BOLLY® 1 AP WB +AP WB CLASS A (HARD FOAM INSULATION)

Model	Volume	Weight	De	H	R2	H1	H2	H3	H4	H5	H6	H7	H9
	[lt]	[Kg]	[mm]										
150	148	54	500	1416	1510	72	206	276	316	396	526	871	936
200	189	63	550	1436	1550	71	216	286	326	406	536	874	946
300	291	75	650	1486	1630	71	241	311	381	431	561	1021	1071
400	422	93	700	1766	1910	71	256	336	396	456	586	1116	1186
500	498	118	750	1786	1950	71	266	346	411	466	596	1136	1216

Net volume data according to EN 15332 available on product label.

Model	H12	H14	K	O	M	D	B	A
				Connections F				
150	1066	1186	Øi120/Øe180	1"1/4	3/4"	1"1/2	3/4"	1"1/4
200	1116	1196	Øi120/Øe180	1"1/4	3/4"	1"1/2	3/4"	1"1/4
300	1141	1231	Øi120/Øe180	1"1/4	1"	1"1/2	1"	1"1/4
400	1386	1466	Øi120/Øe180	1"1/4	1"	1"1/2	1"	1"1/4
500	1331	1476	Øi120/Øe180	1"1/4	1"	1"1/2	1"	1"1/4

Net volume data according to EN 15332 available on product label.

Products designed and manufactured for using within temperature and pressure limits in accordance to Art. 4.3 Directive 2014/68/EU (P.E.D.)

BOLLY® **1 AP**

HEAT EXCHANGERS TECHNICAL DATA



Data have been calculated on following basis:
1) Primary circuit at T1 and proper energy source;
2) Production of DHW in continuous from 10 °C to t2;
3) DHW that can be taken in the first 10' and in the first hour from storage at t2, input 10 °C and output 45 °C;
4) Non-scaling sanitary water

LOWER
HEAT EXCHANGER

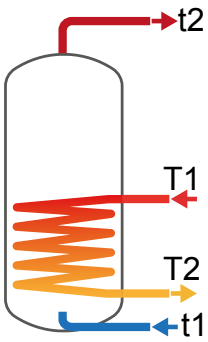

Mod.	Primary flow rate	Ignition time (minutes) from 10 °C to t2 and primary at T1				Maximum power exchange (kW) with primary at T1, secondary from 10°C to t2 constant use of DHW production					DHW continuous production lt/h from 10°C to t2 and primary at T1				
	[m³/h]	T1/t2				T1/t2					T1/t2				
		55/50	65/60	70/60	80/60	55/45	65/45	70/45	80/45	80/60	55/45	65/45	70/45	80/45	80/60
150	2	56	58	41	27	12	18	21	27	22	294	439	512	662	378
	1	65	68	48	32	11	16	18	23	19	266	390	452	577	334
200	2,5	62	65	46	30	13	20	23	30	25	327	488	569	735	439
	1,25	72	76	54	35	12	18	20	26	23	433	433	503	644	393
300	3	65	67	48	31	20	30	35	44	38	490	731	852	1099	666
	1,5	75	79	56	37	18	27	31	39	34	449	656	759	968	596
400	3,5	80	83	58	38	22	33	39	50	43	549	820	956	1234	745
	1,75	92	96	68	45	21	30	35	44	39	506	741	858	1095	672
500	3,5	79	82	58	38	29	42	49	63	54	705	1045	1216	1563	948
	1,75	93	98	69	46	26	38	44	55	49	645	933	1076	1365	847

Mod.	Primary flow rate	DHW produced in the first 10 minutes in lt/10' input 10 °C output 45 °C, storage at t2 and primary at T1				DHW produced in the first hour in lt/60' input 10 °C output 45 °C, storage at t2 and primary at T1				Heat exchanger pressure drop	
	[m³/h]	T1/t2				T1/t2				[mmH$_2$O]	[mbar]
		55/50	65/60	70/60	80/60	55/50	65/60	70/60	80/60		
150	2	218	285	297	322	404	563	621	741	401	39
	1	213	276	287	308	382	523	573	673	113	11
200	2,5	271	351	365	393	478	660	725	858	827	81
	1,25	288	342	354	377	562	616	672	785	229	22
300	3	414	538	558	599	725	1001	1097	1295	1391	136
	1,5	407	525	542	577	692	941	1023	1190	385	38
400	3,5	574	740	762	809	921	1259	1368	1590	2056	202
	1,75	567	726	746	785	887	1196	1289	1479	570	56
500	3,5	687	886	914	972	1133	1547	1684	1962	2673	262
	1,75	677	867	891	939	1085	1458	1572	1803	741	73

HEAT EXCHANGERS PRESSURE DROP

Heat exchangers surface [m²]	
150	1,1
200	1,3
300	1,8
400	2
500	2,6

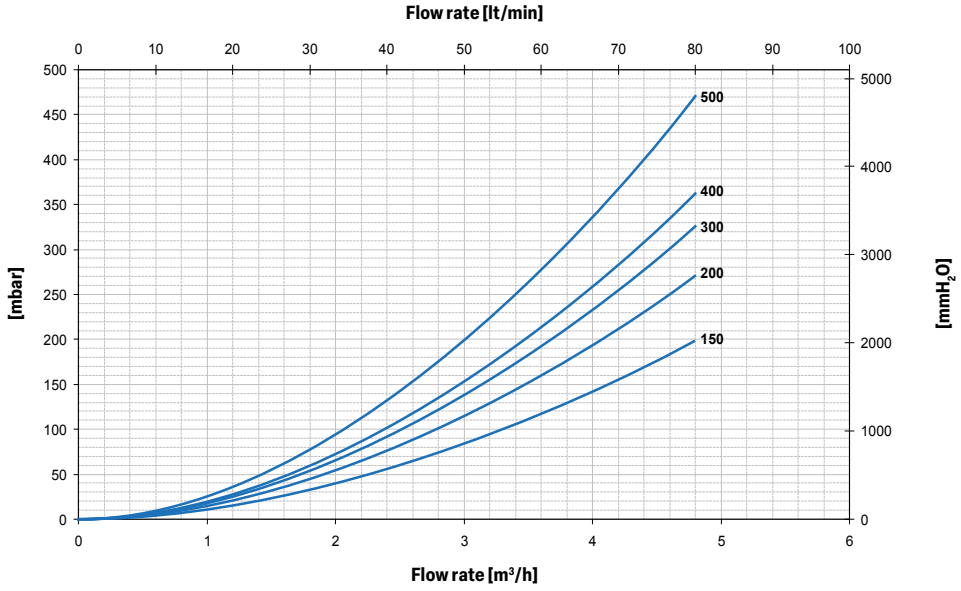

BOLLY® **1 AP**

HEAT EXCHANGERS TECHNICAL DATA



Heat Exchanger output referred to temperature and flow rate of primary circuit and with secondary at 10/45°C at maximum withdrawal of producible DHW (Upper limit of the curves referred to maximum primary flow rate in the heat exchanger, while the lower limit in the curves refer to the minimum primary flow rate)

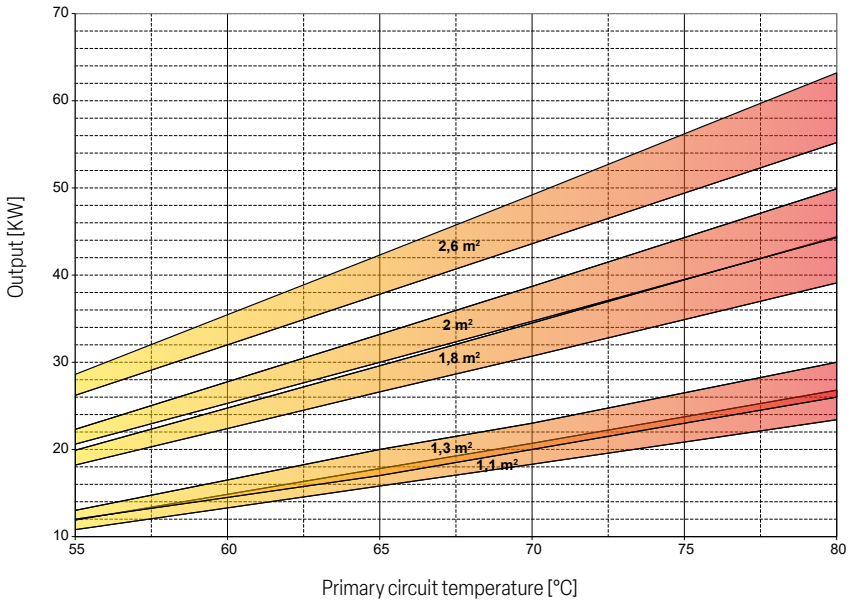

Heat exchanger	1,1 m²		1,3 m²		1,8 m²		2 m²		2,6 m²	
Flow rate [m³/h]	MAX	MIN	MAX	MIN	MAX	MIN	MAX	MIN	MAX	MIN
	2	1	2,5	1,25	3	1,5	3,5	1,75	3,5	1,75

EXAMPLE OF INSTALLATION WITH **BOLLY® 1 AP**

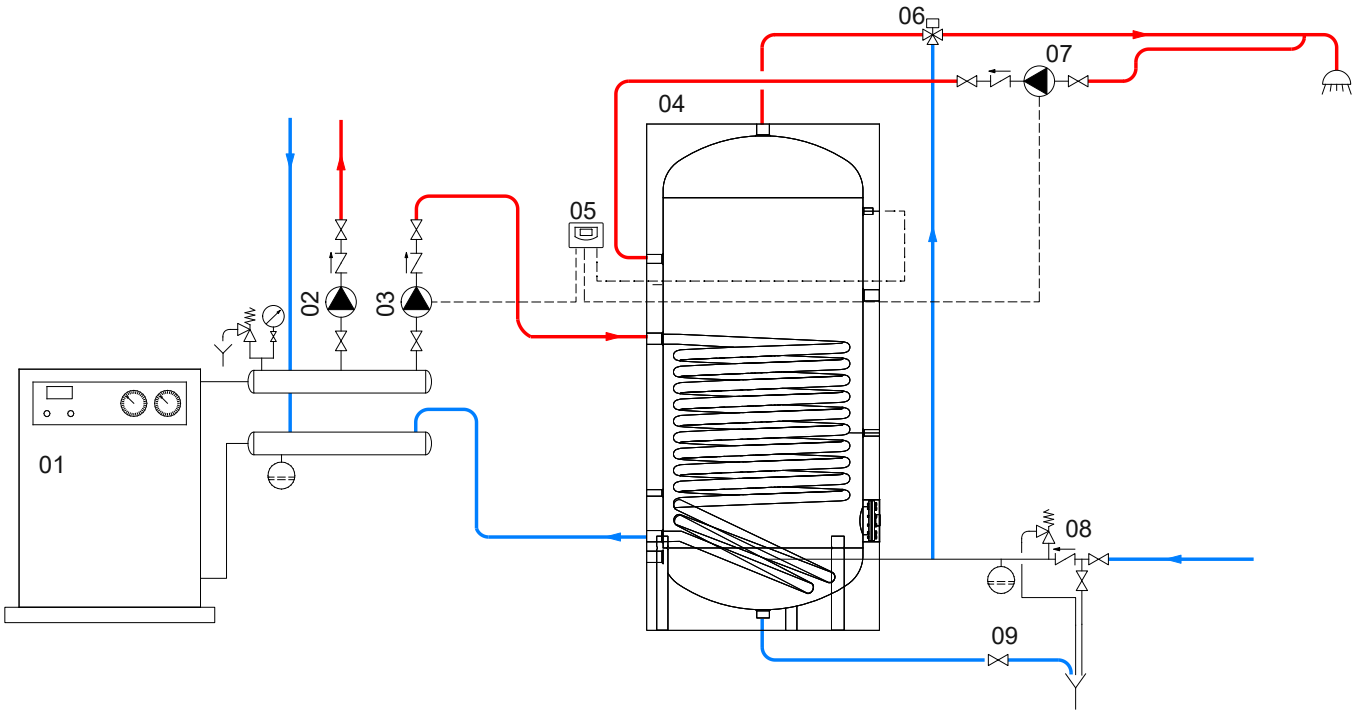

01	Generator	04	Bolly® 1 AP	07	D.H.W. recirculation group
02	Heating system circulation group	05	FULL CONTROL electronic unit /thermostat	08	Hydraulic safety group
03	D.H.W. circulation group	06	Thermostatic mixing valve	09	Blowdown valve

The following schemes are purely illustrative. To realize the installation, always refer to a qualified technician.

BOLLY® **2 AP** - HIGH PERFORMANCES

POLYWARM® COATED DOMESTIC HOT WATER CALORIFIER WITH 2 FIXED HEAT EXCHANGERS



POLYWARM® COATED DHW STORAGE

POLYWARM® COATED HEAT EXCHANGER

ALIGNED

PROMPT AVAILABILITY

APPLICATION
Production and storage of domestic hot water (DHW).
All the connections are aligned on the front and on the back for quick and easy installation.

MATERIAL
Mild steel Polywarm® coated (Attestation ACS - EN 16421)

HEAT EXCHANGER
Nr. 2 Mild steel Polywarm® coated heat exchangers.

INSULATION
HARD: High thermal insulation with ecological polyurethane hard foam.
HARD FOAM (CLASS "A" MODELS): hard polyurethane foam for high thermal insulation with a vacuum sheet of highly insulating material.
Grey PVC external lining.

CATHODE PROTECTION
Magnesium anode.

DRAIN
External confluence through drain connection.

GASKET- FLANGE PLATE
Silicone gaskets suitable for water intended for human consumption (tested according to 98/83/CE), max temperature up to 200°C. Mild steel inspection flange plate Polywarm® coated and connection for electric immerion heater.

WARRANTY
5 years (See general sales conditions and warranty)

ACCESSORIES AND SPARE PARTS
See Accessories section for the entire list.

	Model	Art. Nr.	Heat exchangers surface [m²] Upper	Heat exchangers surface [m²] Lower	ErP ENERGY EFFICIENCY CLASS
BOLLY® 2 AP WB HARD FOAM INSULATION	200	3134162320006	0,4	1,4	B
	300	3134162320007	0,9	1,4	B
	500	3134162320008	1,3	2,2	C
BOLLY® 2 AP WB (class A) HARD FOAM INSULATION	200	3134162330024	0,4	1,4	A
	300	3134162330025	0,9	1,4	A
	500	3134162330026	1,3	2,2	A

ACCESSORIES

ELECTRIC IMMERSION HEATERS

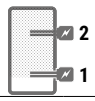

Mod.	Position electric immersion heater	Heated volume by electric immersion heater [lt]	MONOPHASE 1,5 kW	MONOPHASE 2 kW	MONOPHASE 3 kW	THREEPHASE 4 kW	THREEPHASE 5 kW	THREEPHASE 6 kW
			5240000000051	5240000000052	5240000000053	5240000000047	5240000000048	5240000000049
			Ignition time from 10 °C to 45 °C with electric immersion heaters [min]			Ignition time from 10 °C to 45 °C with electric immersion heaters [min]		
200	1	159	285	214	142	//	//	//
	2	58	104	78	52	39	//	//
300	1	235	421	316	210	158	//	//
	2	112	201	151	100	75	60	//
500	1	413	741	555	370	278	222	//
	2	185	331	248	165	124	99	83

FULL CONTROL electronic unit (mounted on tank)

Art. Nr.	for models
5220280000005	WB



For Class A models, only the version not pre-assembled on the tank is available.

Thermometer

Art. Nr.
5032240000107
5 units box



Titanium anode

Art. Nr.	Model
5200000000008	200,300
5200000000009	500



Products designed and manufactured for using within temperature and pressure limits in accordance to Art. 4.3 Directive 2014/68/EU (P.E.D.)

BOLLY® **2 AP** - HIGH PERFORMANCES

POLYWARM® COATED DOMESTIC HOT WATER CALORIFIER WITH 2 FIXED HEAT EXCHANGERS

STORAGE		HEAT EXCHANGER	
Pmax	Tmax	Pmax	Tmax
10 bar	90 °C	12 bar	110 °C

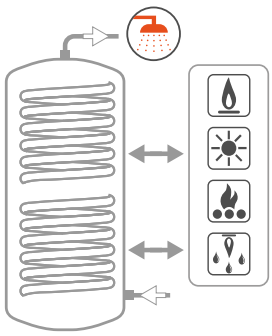

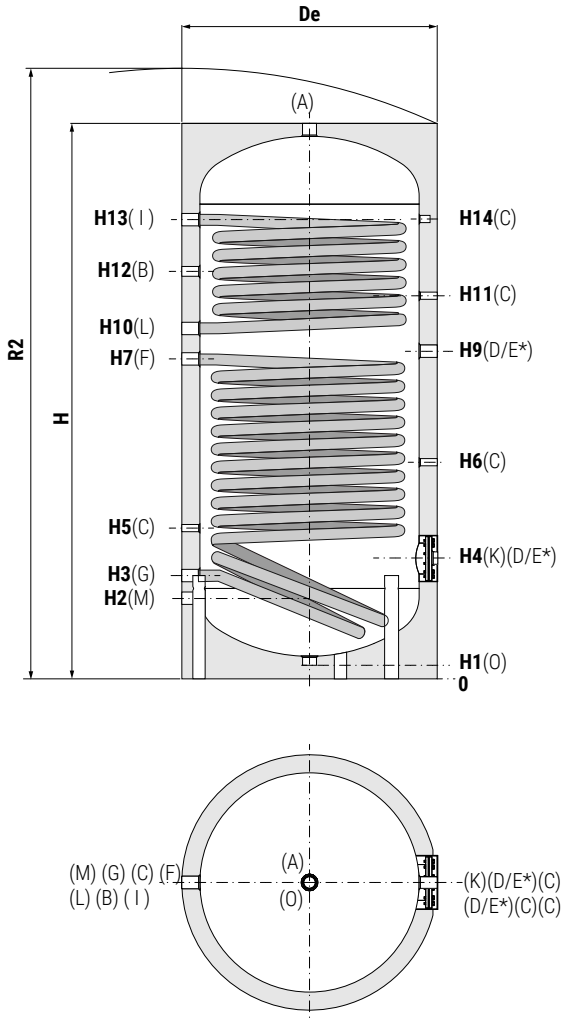

A	Domestic hot water outlet
B	Recirculation
C	Connection for instrumentation G 1/2" F
D	Connection for electric immersion heater
E*	Connection for magnesium anode (use a reducing fitting 1"1/2 =>1"1/4)
F	Lower heat exchanger inlet G 1"1/4 F
G	Lower heat exchanger outlet G 1"1/4 F
I	Upper heat exchanger inlet G 1"1/4 F
K	Flange for inspection
L	Upper heat exchanger outlet G 1"1/4 F
M	Domestic cold water circuit inlet
O	Drain G 1" 1/4 F

BOLLY® 2 AP WB +AP WB CLASS A (HARD FOAM INSULATION)

Model	Volume	Weight	De	H	R2	H1	H2	H3	H4	H5	H6	H7	H8	H9
	[lt]	[Kg]	[mm]											
200	189	65	550	1434	1540	71	215	285	325	405	535	925	//	970
300	291	83	650	1486	1630	71	241	311	381	431	561	832	//	906
500	498	134	750	1786	1950	71	266	346	411	466	586	1036	//	1111

Net volume data according to EN 15332 available on product label.

Model	H10	H11	H12	H13	H14	K	O	M	D	B	A
	[mm]						Connections F				
200	1015	1080	1115	1205	1195	Øi120/Øe180	1"1/4	3/4"	1"1/2	3/4"	1"1/4
300	981	1021	1101	1221	1221	Øi120/Øe180	1"1/4	1"	1"1/2	1"	1"1/4
500	1186	1246	1331	1476	1476	Øi120/Øe180	1"1/4	1"	1"1/2	1"	1"1/4

Net volume data according to EN 15332 available on product label.

Products designed and manufactured for using within temperature and pressure limits in accordance to Art. 4.3 Directive 2014/68/EU (P.E.D.)

BOLLY® **2 AP**

HEAT EXCHANGERS TECHNICAL DATA



Data have been calculated on following basis:
1) Primary circuit at T1 and proper energy source;
2) Production of DHW in continuous from 10 °C to t2;
3) DHW that can be taken in the first 10' and in the first hour from storage at t2, input 10 °C and output 45 °C;
4) Non-scaling sanitary water

UPPER HEAT EXCHANGER

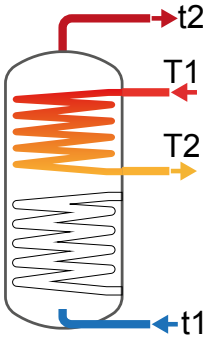

Model	Primary flow rate	Ignition time (minutes) from 10 °C to t2 and primary at T1				Maximum power exchange (kW) with primary at T1, secondary from 10°C to t2 constant use of DHW production					DHW continuous production lt/h from 10°C to t2 and primary at T1				
	[m³/h]	T1/t2				T1/t2					T1/t2				
		55/50	65/60	70/60	80/60	55/45	65/45	70/45	80/45	80/60	55/45	65/45	70/45	80/45	80/60
200	2	54	56	39	25	4	7	8	10	8	107	162	190	247	145
	1	61	63	44	29	4	6	7	9	8	97	146	170	221	131
300	3	41	43	30	20	10	15	18	23	17	243	368	432	562	290
	1,5	47	48	34	22	9	14	16	20	15	223	333	389	503	267
500	3,5	49	51	35	23	14	23	26	32	24	353	532	623	809	419
	1,75	55	57	40	26	13	20	23	29	22	326	482	562	724	385

Model	Primary flow rate	DHW produced in the first 10 minutes in lt/10' input 10 °C output 45 °C, storage at t2 and primary at T1				DHW produced in the first hour in lt/60' input 10 °C output 45 °C, storage at t2 and primary at T1				Heat exchanger pressure drop	
	[m³/h]	T1/t2				T1/t2				[mmH$_2$O]	[mbar]
		55/50	65/60	70/60	80/60	55/50	65/60	70/60	80/60		
200	2	76	100	104	114	144	202	225	270	150	15
	1	74	97	101	109	136	189	209	249	50	5
300	3	149	197	208	229	303	430	481	585	830	81
	1,5	146	191	201	220	287	402	447	538	243	24
500	3,5	242	317	332	363	465	654	727	876	1264	124
	1,75	237	309	322	349	444	614	678	808	371	36

LOWER HEAT EXCHANGER

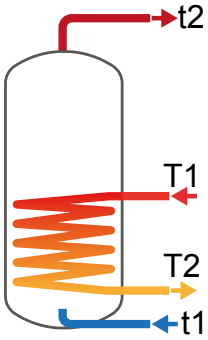

Model	Primary flow rate	Ignition time (minutes) from 10 °C to t2 and primary at T1				Maximum power exchange (kW) with primary at T1, secondary within 10-45 °C and constant use of DHW production					DHW continuous production lt/h within 10-45 °C and primary at T1HW production				
	[m³/h]	T1/t2				T1/t2					T1/t2				
		55/50	65/60	70/60	80/60	55/45	65/45	70/45	80/45	80/60	55/45	65/45	70/45	80/45	80/60
200	3	54	56	40	26	16	23	27	36	29	384	576	673	871	500
	1,5	62	65	46	31	15	21	25	32	26	354	522	607	778	455
300	3	82	85	60	39	16	23	27	36	29	384	576	673	871	500
	1,5	94	98	69	45	15	21	25	32	26	354	522	607	778	455
500	3,5	100	104	73	48	22	33	39	50	41	549	820	956	1234	711
	1,75	115	120	85	56	21	30	35	44	37	506	741	858	1095	643

Model	Primary flow rate	DHW produced in the first 10 minutes in lt/10' input 10 °C output 45 °C, storage at t2 and primary at T1				DHW produced in the first hour in lt/60' input 10 °C output 45 °C, storage at t2 and primary at T1				Heat exchanger pressure drop	
	[m³/h]	T1/t2				T1/t2				[mmH$_2$O]	[mbar]
		55/50	65/60	70/60	80/60	55/50	65/60	70/60	80/60		
200	3	280	366	382	415	523	731	808	967	830	81
	1,5	275	357	371	400	499	688	756	892	243	24
300	3	397	512	528	561	640	877	954	1113	830	81
	1,5	392	503	517	545	616	833	901	1038	243	24
500	3,5	661	848	871	917	1008	1367	1476	1699	1264	124
	1,75	653	835	854	894	974	1304	1398	1587	371	36

HEAT EXCHANGERS PRESSURE DROP

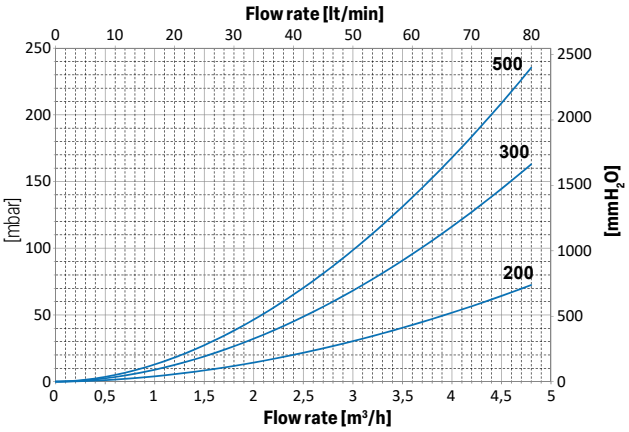

UPPER

Heat exchangers surface [m²]	
200	0,4
300	0,9
500	1,3

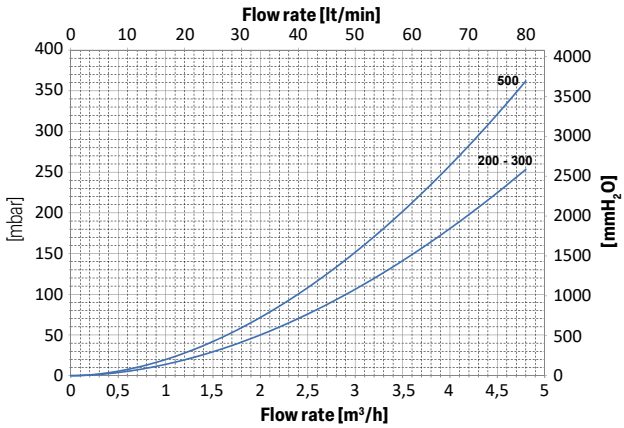

LOWER

Heat exchangers surface [m²]	
200	1,4
300	1,4
500	2,2

BOLLY® **2 AP**

HEAT EXCHANGERS TECHNICAL DATA



Heat Exchanger output referred to temperature and flow rate of primary circuit and with secondary at 10/45°C at maximum withdrawal of producible DHW (Upper limit of the curves referred to maximum primary flow rate in the heat exchanger, while the lower limit in the curves refer to the minimum primary flow rate)

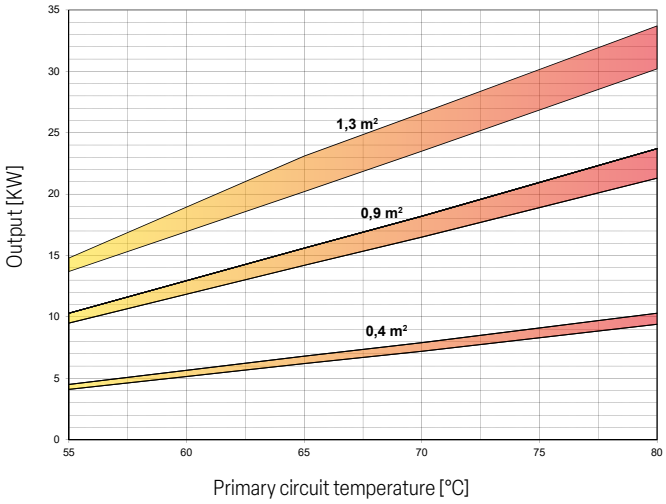

Heat exchanger	0,4 m²		0,9 m²		1,3 m²	
Flow rate [m³/h]	MAX	MIN	MAX	MIN	MAX	MIN
	2	1	3	1,5	3,5	1,75

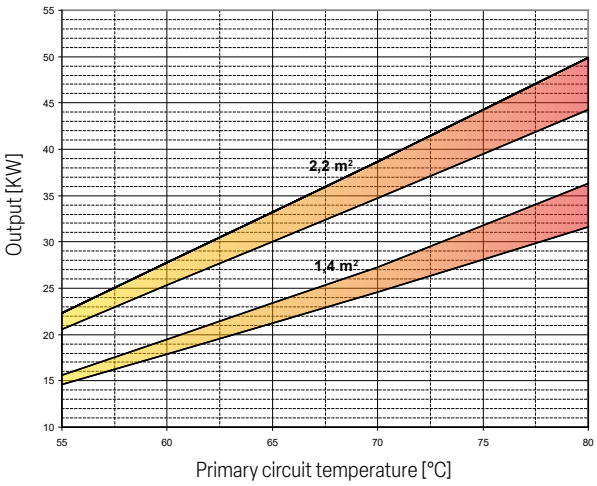

Heat exchanger	1,4 m²		2,2 m²	
Flow rate [m³/h]	MAX	MIN	MAX	MIN
	3	1,5	3,5	1,75

EXAMPLE OF INSTALLATION WITH **BOLLY® 2 AP**

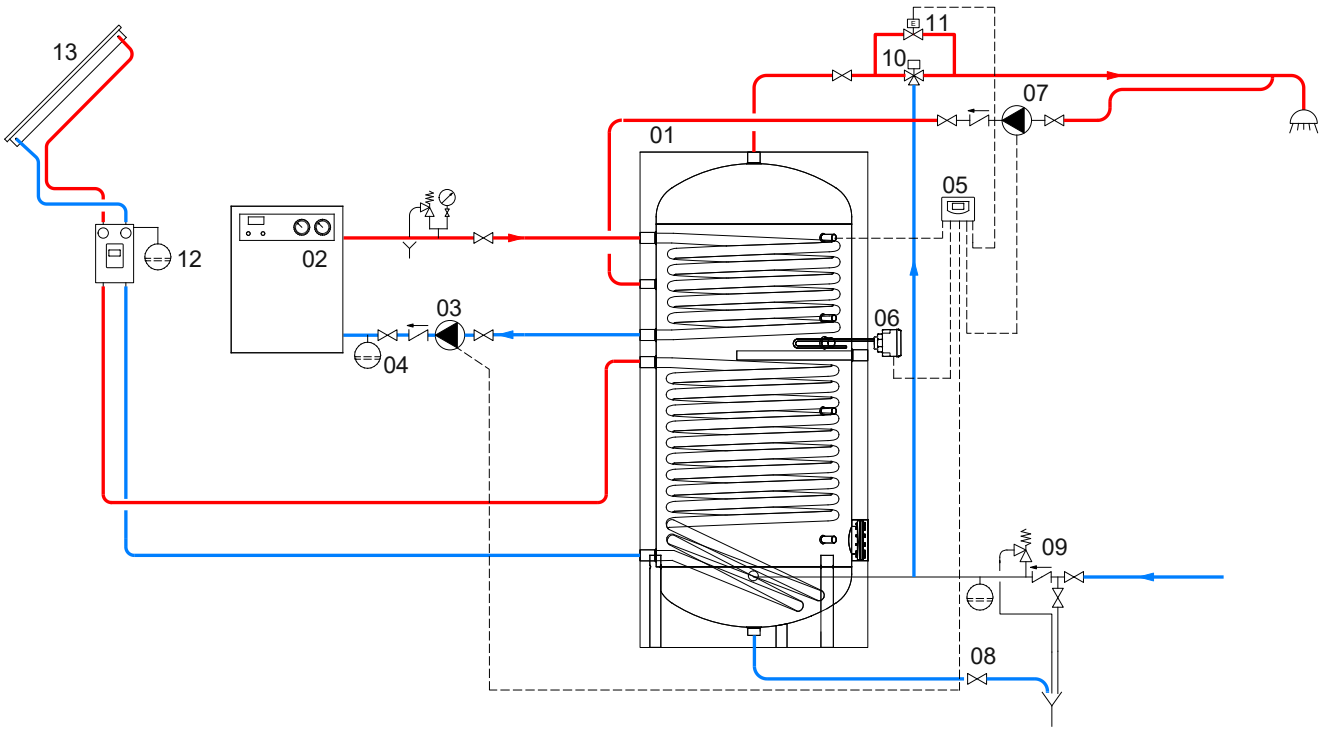

1	Bolly® 2 AP	5	FULL CONTROL electronic unit / thermostat	9	Hydraulic safety group	13	Solar panels
2	Generator	6	Electric immersion heater (optional)	10	Thermostatic mixing valve		
3	Circulation group	7	D.H.W. recirculation group	11	By-pass solenoid valve		
4	Expansion vessel	8	Blowdown valve	12	Solar system circulation group		

The following schemes are purely illustrative. To realize the installation, always refer to a qualified technician.

BOLLY® 1 XL

POLYWARM® COATED DOMESTIC HOT WATER CALORIFIER WITH 1 FIXED HEAT EXCHANGER



APPLICATION
Production and storage of domestic hot water (DHW).
All the connections are aligned on the front and on the back for quick and easy installation.

MATERIAL
Mild steel Polywarm® coated (Attestation ACS - EN 16421)

HEAT EXCHANGER
Mild steel Polywarm® coated heat exchanger.

INSULATION
HARD: High thermal insulation with ecological polyurethane hard foam.
HARD FOAM (CLASS "A" MODELS): hard polyurethane foam for high thermal insulation with a vacuum sheet of highly insulating material.
SOFT (DISMOUNTABLE): NOFIRE® polyester fleece 100% made of recyclable material, with high thermal insulation. Fire resistance class B-s2d0 according to EN 13501.
Grey PVC external lining.

CATHODE PROTECTION
Magnesium anode.

DRAIN
External confluence through drain connection.

GASKET- FLANGE PLATE
Silicone gaskets suitable for water intended for human consumption (tested according to 98/83/CE), max temperature up to 200°C. Mild steel inspection flange plate Polywarm® coated and connection for electric immerion heater.

WARRANTY
5 years (See general sales conditions and warranty)

ACCESSORIES AND SPARE PARTS
See Accessories section for the entire list.







PROMPT AVAILABILITY

	Model	Art. Nr.	Heat exchangers surface [m²]	ErP ENERGY EFFICIENCY CLASS
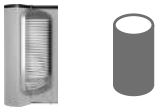 **BOLLY® 1 XL WB** HARD FOAM INSULATION	200	3104162330011	2	B
	300	3104162330012	3,4	B
	400	3104162330013	4,4	C
	500	3104162330014	5,4	C
	800	3104162330015	6,0	B
	1000	3104162330016	6,5	B
	1500	3104162330060	7,7	C
 **BOLLY® 1 XL WC** DISMOUNTABLE SOFT FLEECE INSULATION	800	3104162320007	6,0	C
	1000	3104162320008	6,5	C
	1500	3103162321160	7,7	C
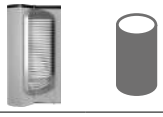 **BOLLY® 1 XL WB class A** HARD FOAM INSULATION	200	3104162330051	2	A
	300	3104162330052	3,4	A
	500	3104162330053	5,4	A

ACCESSORIES

ELECTRIC IMMERSION HEATERS

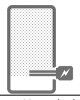

Mod.	Heated volume by electric immersion heater [lt]	MONOPHASE 1,5 kW	MONOPHASE 2 kW	MONOPHASE 3 kW	THREEPHASE 4 kW	THREEPHASE 5 kW	THREEPHASE 6 kW	THREEPHASE 9 kW	THREEPHASE 12 kW
		5240000000051	5240000000052	5240000000053	5240000000047	5240000000048	5240000000049	5240000000050	5240000000031
		Ignition time from 10 °C to 45 °C with electric immersion heaters [min]			Ignition time from 10 °C to 45 °C with electric immersion heaters [min]				
200	159	285	214	142	//	//	//	//	//
300	235	421	316	210	158	//	//	//	//
400	353	632	474	316	237	//	//	//	//
500	413	741	555	370	278	222	//	//	//
800	668	1197	898	598	449	359	299	199	//
1000	874	1565	1174	783	587	470	391	261	196
1500	1000	1791	1343	895	671	537	448	298	224

FULL CONTROL electronic unit (mounted on tank)

Art. Nr.	for models
5220280000004	WC
5220280000005	WB



For Class A models, only the version not pre-assembled on the tank is available.

HEAT MANAGER + electric immersion heater 1,5 kW + probe +3m cable

Art. Nr.	Output [kW]
5240000000074	1,5
5240000000075	2
5240000000076	3



Titanium anode

See Accessories section



Products designed and manufactured for using within temperature and pressure limits in accordance to Art. 4.3 Directive 2014/68/EU (P.E.D.)

BOLLY® **1 XL**

POLYWARM® COATED DOMESTIC HOT WATER CALORIFIER WITH 1 FIXED HEAT EXCHANGER

	STORAGE		HEAT EXCHANGER	
Model	Pmax	Tmax	Pmax	Tmax
200 ÷ 800	10 bar	90 °C	12 bar	110 °C
1000,1500	8 bar			

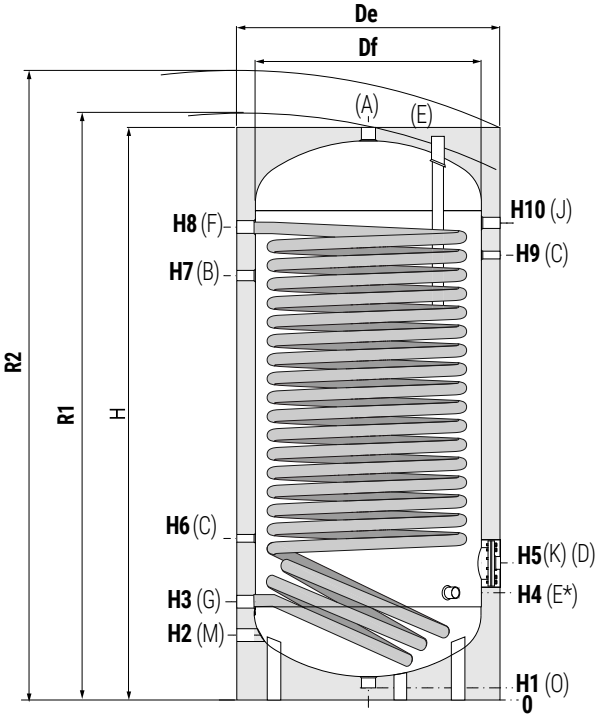

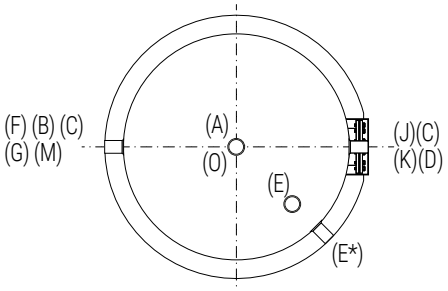

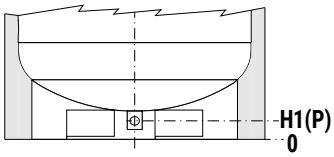

Models 1500 are equipped with a practical skirt support which facilitate the handling with transpallets and forklifts. Also, discharge piping already mounted to allow total emptying.

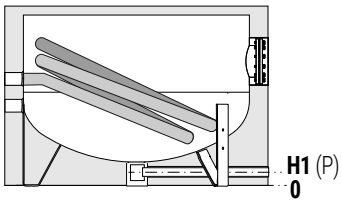

Only for models 800- 1000

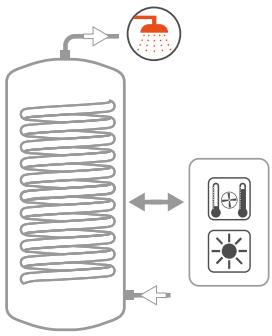

A	Domestic hot water outlet
B	Recirculation
C	Connection for instrumentation G 1/2" F
D	Connection for electric immersion heater
E	Connection for magnesium anode G 1"1/4 F (for models ⩽ lt.1000)
E*	Connection for magnesium anode G 1"1/4 F (For model lt.1500)
F	Primary circuit inlet G 1"1/4 F
G	Primary circuit outlet G 1"1/4 F
J	Connection for 2nd magnesium anode G 1"1/4 F (for models lt.1500)
K	Flange for inspection
M	Domestic cold water circuit inlet
O	Drain G 1"1/4 F
P	Drain for models >500

BOLLY® 1 XL WB + XL WB CLASS A(HARD FOAM INSULATION)

Model	Volume	Weight	Df	H	De	R1	R2	H1	H2	H3	H4	H5	H6	H7	H8	H9	H10	K	M	B	A	D	P
	[lt]	[Kg]	[mm]																Connections F				
200	189	96	//	1440	550	//	1560	71	215	285	//	325	405	1055	1190	1190	//	Øi120/Øe180	3/4"	3/4"	1"1/4	1"1/2	//
300	291	130	//	1500	650	//	1650	71	241	321	//	381	431	1091	1211	1211	//	Øi120/Øe180	1"	1"	1"1/4	1"1/2	//
400	422	154	//	1780	700	//	1930	71	256	336	//	396	446	1316	1471	1471	//	Øi120/Øe180	1"	1"	1"1/4	1"1/2	//
500	497	174	//	1800	750	//	1960	71	266	346	//	411	466	1326	1486	1486	//	Øi120/Øe180	1"	1"	1"1/4	1"1/2	//
800	789	264	//	2170	900	//	2360	101	338	418	//	483	538	1548	1808	1808	//	Øi170/Øe240	1"	1"	1"1/4	2"	3/4"
1000	1038	303	//	2230	1000	//	2460	89	359	439	//	499	559	1584	1829	1829	//	Øi170/Øe240	1"1/4	1"	1"1/2	2"	3/4"
1500	1438	368	//	2420	1100	//	2670	109	335	425	495	575	545	1825	2015	1940	2065	Øi300/Øe380	1"1/2	1	2	2	1"

Net volume data according to EN 15332 available on product label.

BOLLY® 1 XL WC (DISMOUNTABLE SOFT FLEECE INSULATION)

Model	Volume	Weight	Df	H	De	R1	R2	H1	H2	H3	H4	H5	H6	H7	H8	H9	H10	K	M	B	A	D	P
	[lt]	[Kg]	[mm]																Connections F				
800	789	226	750	2190	950	2330	2400	101	338	418	//	483	538	1548	1808	1808	//	Øi170/Øe240	1"	1"	1"1/4	2"	3/4"
1000	1038	255	850	2250	1050	2420	2500	89	359	439	//	499	559	1584	1829	1829	//	Øi170/Øe240	1"1/4	1"	1"1/2	2"	3/4"
1500	1438	358	950	2440	1150	2630	2710	109	335	425	495	575	545	1825	2015	1940	2065	Øi300/Øe380	1"1/2	1	2	2	1"

Net volume data according to EN 15332 available on product label.

Products designed and manufactured for using within temperature and pressure limits in accordance to Art. 4.3 Directive 2014/68/EU (P.E.D.)

BOLLY® 1 XL

HEAT EXCHANGERS TECHNICAL DATA



Data have been calculated on following basis:
1) Primary circuit at T1 and proper energy source;
2) Production of DHW in continuous from 10 °C to t2;
3) DHW that can be taken in the first 10' and in the first hour from storage at t2, input 10 °C and output 45 °C;
4) Non-scaling sanitary water

Model	Primary flow rate	Ignition time (minutes) from 10 °C to t2 and primary at T1				Maximum power exchange (kW) with primary at T1, secondary from 10°C to t2 constant use of DHW production					DHW continuous production lt/h from 10°C to t2 and primary at T1				
	[m³/h]	T1/t2				T1/t2					T1/t2				
		55/50	65/60	70/60	80/60	55/45	65/45	70/45	80/45	80/60	55/45	65/45	70/45	80/45	80/60
200	2,5	40	42	30	20	21	31	36	47	34	522	773	899	1153	589
	1,25	49	52	36	24	19	28	32	40	30	468	677	780	990	522
300	3	44	46	32	22	30	45	52	66	58	751	1104	1281	1640	1016
	1,5	55	57	41	27	27	39	44	56	51	664	951	1093	1377	893
400	3,5	47	49	35	23	42	61	71	90	78	1033	1510	1747	2229	1355
	1,75	59	62	44	30	37	53	60	75	68	915	1298	1486	1863	1190
500	3,5	49	51	36	24	48	70	81	103	78	1198	1740	2009	2551	1355
	1,75	62	65	47	31	43	60	68	85	68	1060	1487	1696	2114	1190
800	5	59	61	43	29	64	93	107	136	116	1571	2291	2650	3372	2022
	2,5	72	76	55	37	57	80	92	115	103	1412	1993	2277	2845	1790
1000	8	65	68	48	32	72	106	124	158	131	1780	2632	3058	3925	2290
	4	76	80	57	38	66	95	110	139	119	1642	2364	2720	3436	2085
1500	8	79	82	59	39	83	122	141	180	156	2057	3017	3497	4465	2728
	4	94	99	71	48	76	109	124	156	141	1887	2691	3086	3878	2462

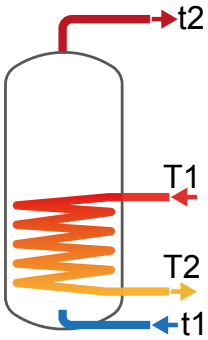

Model	Primary flow rate	DHW produced in the first 10 minutes in lt/10' input 10 °C output 45 °C, storage at t2 and primary at T1				DHW produced in the first hour in lt/60' input 10 °C output 45 °C, storage at t2 and primary at T1				Heat exchanger pressure drop	
	[m³/h]	T1/t2				T1/t2				[mmH₂O]	[mbar]
		55/50	65/60	70/60	80/60	55/50	65/60	70/60	80/60		
200	2,5	303	399	420	462	634	888	989	1193	871	85
	1,25	294	383	400	435	590	811	894	1062	260	25
300	3	458	600	629	689	934	1299	1441	1728	759	74
	1,5	443	574	598	645	864	1176	1290	1517	235	23
400	3,5	655	855	894	974	1309	1811	2001	2386	1287	126
	1,75	635	819	850	913	1214	1641	1791	2093	407	40
500	3,5	769	1001	1046	1137	1528	2103	2319	2752	1491	146
	1,75	746	959	994	1064	1417	1901	2068	2403	472	46
800	5	1165	1510	1570	1691	2160	2962	3249	3826	3502	343
	2,5	1138	1461	1508	1603	2032	2723	2950	3405	1043	102
1000	8	1482	1920	1991	2136	2609	3587	3928	4621	8530	837
	4	1459	1875	1935	2054	2499	3372	3657	4230	2561	251
1500	8	1986	2557	2637	2798	3289	4468	4852	5626	10247	1005
	4	1958	2503	2569	2701	3153	4207	4523	5157	3079	302

HEAT EXCHANGERS PRESSURE DROP

Heat exchangers	surface [m²]
200	2
300	3,4
400	4,4
500	5,4
800	6
1000	6,5
1500	7,7

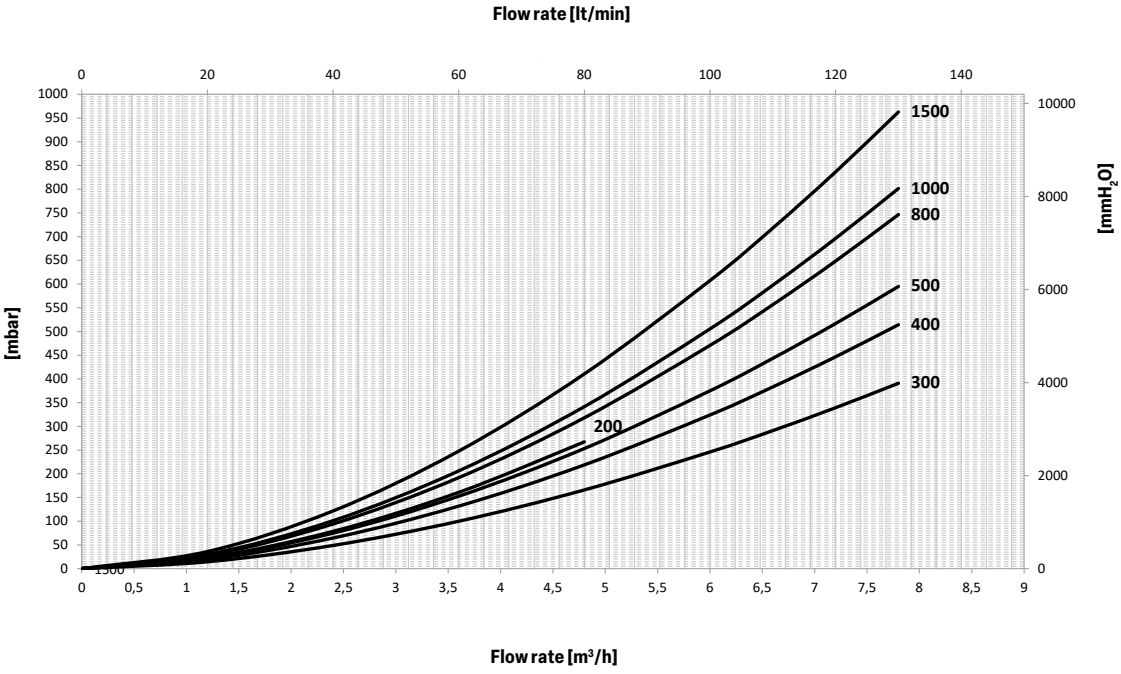

BOLLY® **1 XL**

HEAT EXCHANGERS TECHNICAL DATA



Heat Exchanger output referred to temperature and flow rate of primary circuit and with secondary at 10/45°C at maximum withdrawal of producible DHW (Upper limit of the curves referred to maximum primary flow rate in the heat exchanger, while the lower limit in the curves refer to the minimum primary flow rate)

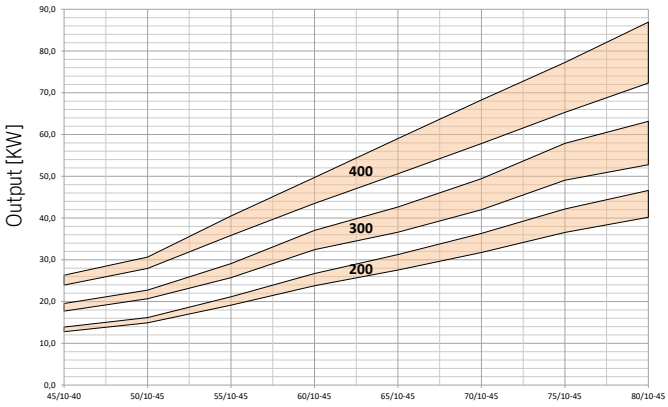

PRIMARY/SECONDARY IN-OUT Temperature [°C]

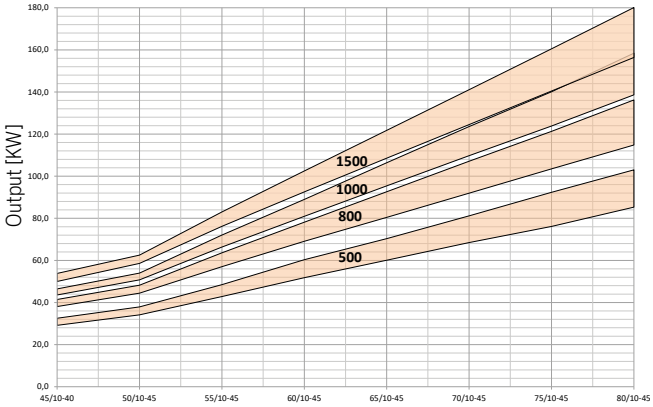

PRIMARY/SECONDARY IN-OUT Temperature [°C]

Model	**200**		**300**		**400**	
Flow rate [m³/h]	MAX	MIN	MAX	MIN	MAX	MIN
	2,5	1,25	3	1,5	3,5	1,75

Model	**500**		**800**		**1000**		**1500**	
Flow rate [m³/h]	MAX	MIN	MAX	MIN	MAX	MIN	MAX	MIN
	3,5	1,75	5	2,5	8	4	8	4

EXAMPLE OF INSTALLATION WITH **BOLLY® 1 XL**

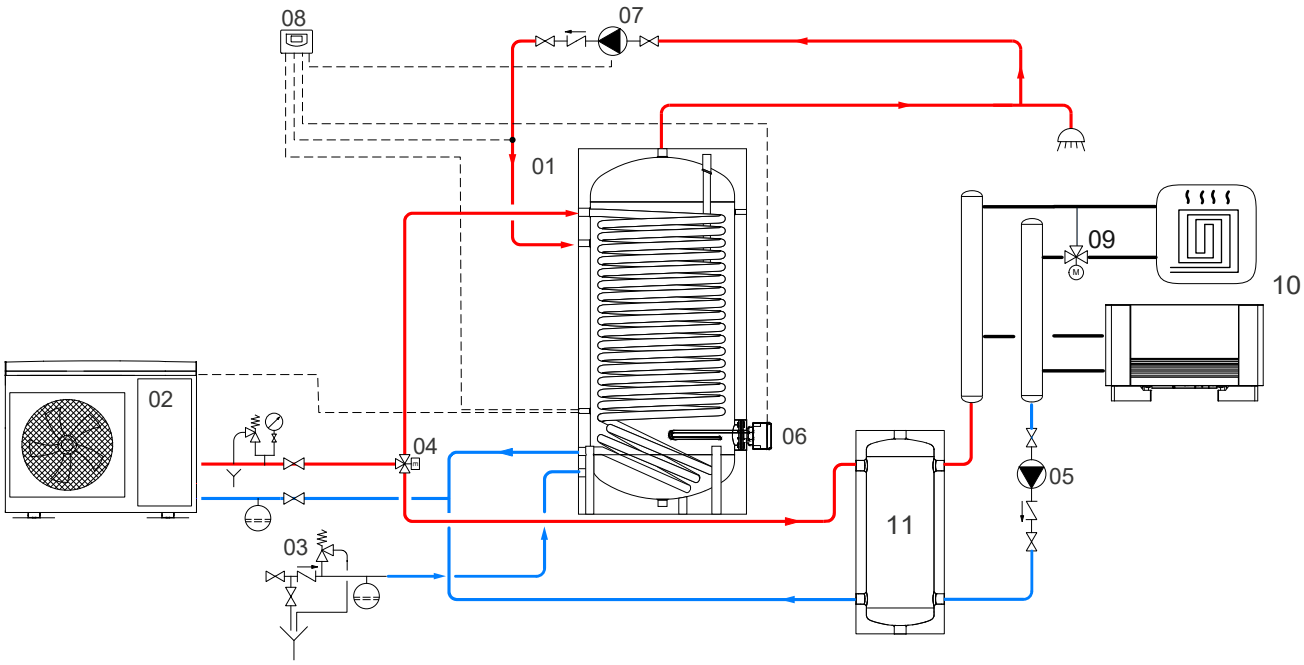

1	Bolly® 1 XL	4	Motorized 3-way valve	7	D.H.W. recirculation group	10	Heating units
2	Generator (Heat pump)	5	Circulation group for heating/cooling system	8	FULL CONTROL electronic unit / thermostat	11	Buffer tank
3	Hydraulic safety group	6	Electric immersion heater	9	Thermostatic mixing valve		

The following schemes are purely illustrative. To realize the installation, always refer to a qualified technician.

BOLLY® 2 XL

POLYWARM® COATED DOMESTIC HOT WATER CALORIFIER WITH 2 FIXED HEAT EXCHANGERS



APPLICATION
Production and storage of domestic hot water (DHW).
All the connections are aligned on the front and on the back for quick and easy installation.
MATERIAL
Mild steel Polywarm® coated (Attestation ACS - EN 16421)
HEAT EXCHANGER
Nr. 2 Mild steel Polywarm® coated heat exchangers.
INSULATION
HARD: High thermal insulation with ecological polyurethane hard foam.
HARD FOAM (CLASS "A" MODELS): hard polyurethane foam for high thermal insulation with a vacuum sheet of highly insulating material.
SOFT (DISMOUNTABLE): NOFIRE® polyester fleece 100% made of recyclable material, with high thermal insulation. Fire resistance class B-s2d0 according to EN 13501.
Grey PVC external lining.

CATHODE PROTECTION
Magnesium anode.
DRAIN
External confluence through drain connection.
GASKET- FLANGE PLATE
Silicone gaskets suitable for water intended for human consumption (tested according to 98/83/CE), max temperature up to 200°C. Mild steel inspection flange plate Polywarm® coated and connection for electric immersion heater.
WARRANTY
5 years (See general sales conditions and warranty)
ACCESSORIES AND SPARE PARTS
See Accessories section for the entire list.









		Model	Art. Nr.	Heat exchangers surface [m²] Upper	Heat exchangers surface [m²] Lower	ErP ENERGY EFFICIENCY CLASS
 	**BOLLY® 2 XL WB** HARD FOAM INSULATION	200	3134162320001	1,4	0,4	B
		300	3134162320002	1,9	0,9	B
		500	3134162320003	3,1	1,4	C
		800	3134162330036	4,2	1,8	C
		1000	3134162330037	5,2	2,5	C
 	**BOLLY® 2 XL WB class A** HARD FOAM INSULATION	200	3134162330021	1,4	0,4	A
		300	3134162330022	1,9	0,9	A
		500	3134162330023	3,1	1,4	A
 	**BOLLY® 2 XL WC** DISMOUNTABLE SOFT FLEECE INSULATION	800	3138162320123	4,2	1,8	C
		1000	3138162320124	5,2	2,5	C

ACCESSORIES

ELECTRIC IMMERSION HEATERS

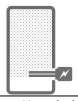

Mod.	Heated volume by electric immersion heater [lt]	MONOPHASE 1,5 kW	MONOPHASE 2 kW	MONOPHASE 3 kW	THREEPHASE 4 kW	THREEPHASE 5 kW	THREEPHASE 6 kW	THREEPHASE 9 kW	THREEPHASE 12 kW
		5240000000051	5240000000052	5240000000053	5240000000047	5240000000048	5240000000049	5240000000050	5240000000031
		Ignition time from 10 °C to 45 °C with electric immersion heaters [min]			Ignition time from 10 °C to 45 °C with electric immersion heaters [min]				
200	159	285	214	142	//	//	//	//	//
300	235	421	316	210	158	//	//	//	//
400	353	632	474	316	237	//	//	//	//
500	413	741	555	370	278	222	//	//	//
800	668	1197	898	598	449	359	299	199	//
1000	874	1565	1174	783	587	470	391	261	196

FULL CONTROL electronic unit (mounted on tank)

Art. Nr.	for models	
5220280000005	WB	

For Class A models, only the version not pre-assembled on the tank is available.

Titanium anode

Art. Nr.	Model	
5200000000008	200,300	
5200000000009	500	

Products designed and manufactured for using within temperature and pressure limits in accordance to Art. 4.3 Directive 2014/68/EU (P.E.D.)

BOLLY® **2 XL**

POLYWARM® COATED DOMESTIC HOT WATER CALORIFIER WITH 2 FIXED HEAT EXCHANGERS

	STORAGE		HEAT EXCHANGER	
Model	Pmax	Tmax	Pmax	Tmax
200÷800	10 bar	90 °C	12 bar	110 °C
1000,1500	8 bar			

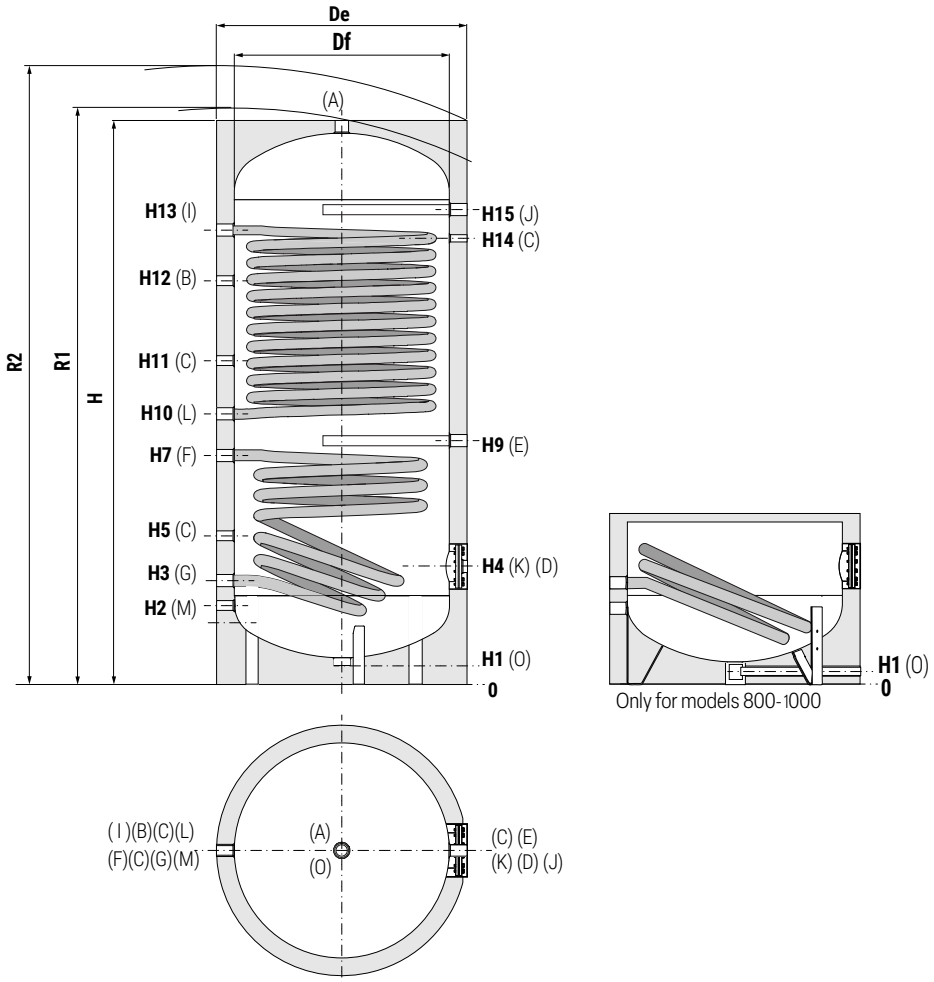

Only for models 800-1000

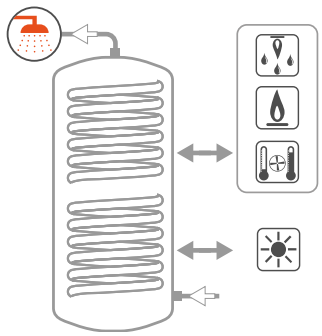

A	Domestic hot water outlet 1" 1/4
B	Recirculation
C	Connection for instrumentation G 1/2" F
D	Connection for electric immersion heater G 1"1/2 F
E	Connection for magnesium anode G 1"1/4 F
F	Lower heat exchanger inlet G 1" F
G	Lower heat exchanger outlet G 1"F
I	Upper heat exchanger inlet Connection for 2nd magnesium anode G 1"F
J	Connection for 2nd magnesium anode G 1"1/4 F (only for models ≥800)
K	Flange for inspection
L	Upper heat exchanger outlet G 1"F
M	Domestic cold water circuit inlet
O	Drain G 1" 1/4

BOLLY® 2 XL WB + XL WB CLASS A (HARD FOAM INSULATION)

Model	Volume	Weight	De	H	R2	H1	H2	H3	H4	H5	H7
	[lt]	[Kg]	[mm]								
200	189	65	550	1434	1540	65	215	285	325	405	475
300	291	83	650	1486	1620	65	241	311	381	431	596
500	498	134	750	1786	1940	65	266	346	411	466	671
800	789	303	900	2170	2350	100	340	420	485	540	780
1000	1038	368	1000	2230	2440	89	360	440	500	560	840

Model	H9	H10	H11	H12	H13	H14	H15	K	M	B	A
	[mm]								Connections F		
200	520	570	690	1089	1200	1200	//	Øi120/Øe180	3/4"	3/4"	
300	641	686	806	1090	1226	1226	//	Øi120/Øe180	1"	1"	1"1/4
500	716	761	881	1091	1476	1476	//	Øi120/Øe180	1"	1"	1"1/4
800	790	910	1030	1550	1800	1700	1815	Øi170/Øe240	1"	1"	1"1/4
1000	905	970	1090	1585	1830	1715	1850	Øi170/Øe240	1"1/4	1"	1"1/2

Net volume data according to EN 15332 available on product label.

BOLLY® 2 XL WC (DISMOUNTABLE SOFT FLEECE INSULATION)

Model	Volume	Weight	Df	H	De	R1	R2	H1	H2	H3	H4	H5	H7
	[lt]	[Kg]	[mm]										
800	789	303	750	2170	950	2300	2370	100	340	420	485	540	780
1000	1038	368	850	2230	1050	2390	2460	89	360	440	500	560	840

Model	H9	H10	H11	H12	H13	H14	H15	K	M	B	A
	[mm]								Connections F		
800	790	910	1030	1550	1800	1700	1815	Øi170/Øe240	1"	1"	1"1/4
1000	905	970	1090	1585	1830	1715	1850	Øi170/Øe240	1"1/4	1"	1"1/2

Net volume data according to EN 15332 available on product label.

Products designed and manufactured for using within temperature and pressure limits in accordance to Art. 4.3 Directive 2014/68/EU (P.E.D.)

BOLLY® **2 XL**

HEAT EXCHANGERS TECHNICAL DATA



Data have been calculated on following basis:
1) Primary circuit at T1 and proper energy source;
2) Production of DHW in continuous from 10 °C to t2;
3) DHW that can be taken in the first 10' and in the first hour from storage at t2, input 10 °C and output 45 °C;
4) Non-scaling sanitary water

Model	Primary flow rate	Ignition time (minutes) from 10 °C to t2 and primary at T1				Maximum power exchange (kW) with primary at T1, secondary from 10°C to t2 constant use of DHW production					DHW continuous production lt/h from 10°C to t2 and primary at T1				
	[m³/h]	T1/t2				T1/t2					T1/t2				
		55/50	65/60	70/60	80/60	55/45	65/45	70/45	80/45	80/60	55/45	65/45	70/45	80/45	80/60
200	2,5	37	38	27	18	15	23	27	34	29	377	564	659	851	495
	1,25	42	44	31	21	14	21	24	30	25	346	507	586	749	442
300	3	43	45	31	20	20	30	35	46	38	501	747	871	1123	653
	1,5	50	52	37	24	18	27	31	39	34	454	661	765	975	585
500	3,5	46	48	34	22	33	49	56	72	61	812	1198	1392	1786	1064
	1,75	47	49	35	23	30	42	49	62	54	732	1050	1208	1525	945
800	5	35	36	26	17	45,0	66,2	76,9	98,5	84,9	1112	1638	1904	2437	1480
	2,5	42	44	31	21	41,0	58,9	67,8	85,5	76,4	1014	1457	1676	2117	1330
1000	8	36	38	27	18	57,4	85,2	99,0	127,3	108,8	1420	2108	2453	3153	1897
	4	42	44	31	21	53,4	77,5	89,5	113,6	99,9	1321	1918	2214	2812	1741

UPPER
HEAT EXCHANGER

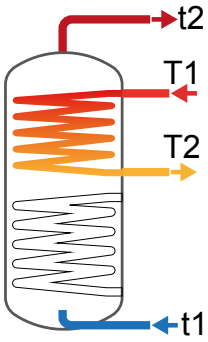

Model	Primary flow rate	DHW produced in the first 10 minutes in lt/10' input 10 °C output 45 °C, storage at t2 and primary at T1				DHW produced in the first hour in lt/60' input 10 °C output 45 °C, storage at t2 and primary at T1				Heat exchanger pressure drop	
	[m³/h]	T1/t2				T1/t2				[mmH₂O]	[mbar]
		55/50	65/60	70/60	80/60	55/50	65/60	70/60	80/60		
200	2,5	201	267	283	315	440	624	700	854	714,5	70,0
	1,25	196	257	271	298	415	578	642	772	225,6	22,1
300	3	270	357	378	420	587	830	929	1131	378,4	37,1
	1,5	262	343	360	395	550	762	845	1013	121,4	11,9
500	3,5	478	628	661	726	993	1387	1542	1857	777,2	76,2
	1,75	465	604	630	683	928	1269	1395	1649	247,5	24,3
800	5	583	770	814	903	1287	1808	2020	2447	2177,8	213,4
	2,5	567	740	776	850	1209	1663	1838	2191	670,1	65,7
1000	8	774	1023	1080	1197	1673	2358	2634	3194	6207,4	608,3
	4	757	991	1040	1140	1594	2206	2443	2921	1816,2	178,0

BOLLY® **2 XL**

HEAT EXCHANGERS TECHNICAL DATA



Data have been calculated on following basis:
1) Primary circuit at T1 and proper energy source;
2) Production of DHW in continuous from 10 °C to t2;
3) DHW that can be taken in the first 10' and in the first hour from storage at t2, input 10 °C and output 45 °C;
4) Non-scaling sanitary water

Model	Primary flow rate	Ignition time (minutes) from 10 °C to t2 and primary at T1				Maximum power exchange (kW) with primary at T1, secondary from 10°C to t2 constant use of DHW production					DHW continuous production lt/h from 10°C to t2 and primary at T1				
	[m³/h]	T1/t2				T1					T1				
		55/50	65/60	70/60	80/60	55/45	65/45	70/45	80/45	80/60	55/45	65/45	70/45	80/45	80/60
200	2,5	182	189	130	84	4,8	6,9	8,1	10,5	6,3	110	168	198	259	108
	1,25	225	241	151	95	4,4	6,4	7,5	9,7	5,8	99	152	179	235	100
300	3	127	132	92	60	9,9	15,0	17,5	22,8	18,8	243	368	431	561	326
	1,5	150	157	107	69	9,1	13,6	15,8	20,4	17,2	220	330	385	499	298
500	3,5	141	146	102	67	15,5	23,2	27,1	35,1	27,5	380	572	669	868	478
	1,75	139	145	101	66	14,2	21,0	24,4	31,3	25,3	346	514	598	771	298
800	5	171	178	125	82	20,0	30,0	35,1	45,5	38,3	493	741	866	1123	664
	2,5	190	198	140	92	19,0	27,7	32,2	41,4	35,5	461	683	795	1023	616
1000	8	157	163	115	75	28,4	42,7	49,9	64,7	54,3	699	1054	1233	1599	944
	4	171	178	126	83	27,0	40,0	46,6	59,9	51,2	664	987	1150	1481	889

LOWER
HEAT EXCHANGER

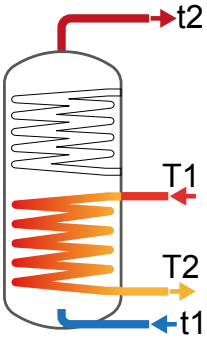

Model	Primary flow rate	DHW produced in the first 10 minutes in lt/10' input 10 °C output 45 °C, storage at t2 and primary at T1				DHW produced in the first hour in lt/60' input 10 °C output 45 °C, storage at t2 and primary at T1				Heat exchanger pressure drop	
	[m³/h]	T1/t2				T1/t2				[mmH₂O]	[mbar]
		55/50	65/60	70/60	80/60	55/50	65/60	70/60	80/60		
200	2,5	234	298	303	313	304	405	428	477	241,0	23,6
	1,25	232	295	300	309	295	392	413	458	73,7	7,2
300	3	373	477	488	509	527	710	761	865	195,3	19,1
	1,5	369	471	480	499	508	679	724	815	61,7	6,0
500	3,5	546	698	714	748	786	1060	1138	1297	373,3	36,6
	1,75	540	688	703	731	759	1014	1082	1219	117,4	11,5
800	5	985	1252	1273	1316	1297	1721	1821	2027	985,3	96,6
	2,5	980	1242	1261	1299	1272	1675	1765	1947	300,1	29,4
1000	8	1302	1657	1687	1748	1744	2325	2468	2761	3101,6	304,0
	4	1296	1646	1673	1728	1716	2271	2401	2666	902,8	88,5

BOLLY® **2 XL**

HEAT EXCHANGERS TECHNICAL DATA



Heat Exchanger output referred to temperature and flow rate of primary circuit and with secondary at 10/45°C at maximum withdrawal of producible DHW (Upper limit of the curves referred to maximum primary flow rate in the heat exchanger, while the lower limit in the curves refer to the minimum primary flow rate)

UPPER HEAT EXCHANGERS

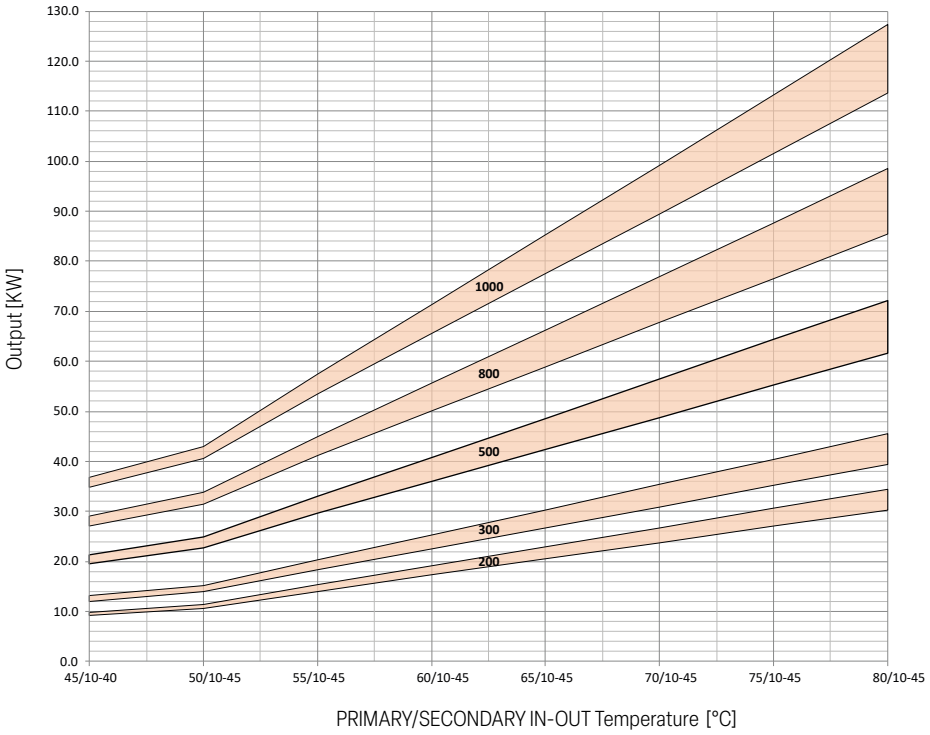

Model	200		300		500		800		1000	
Flow rate [m³/h]	MAX	MIN	MAX	MIN	MAX	MIN	MAX	MIN	MAX	MIN
	2,5	1,25	3	1,5	3,5	1,75	5	2,5	8	4

LOWER HEAT EXCHANGERS

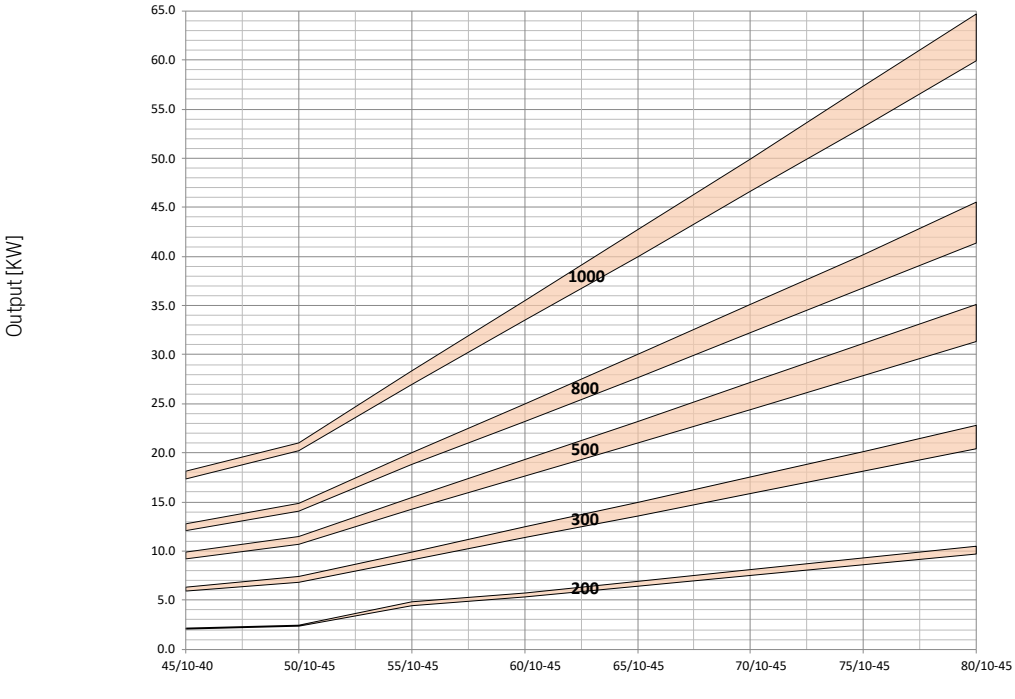

Model	200		300		500		800		1000	
Flow rate [m³/h]	MAX	MIN	MAX	MIN	MAX	MIN	MAX	MIN	MAX	MIN
	2,5	1,25	3	1,5	3,5	1,75	5	2,5	8	4

BOLLY® **2 XL**

HEAT EXCHANGERS PRESSURE DROP



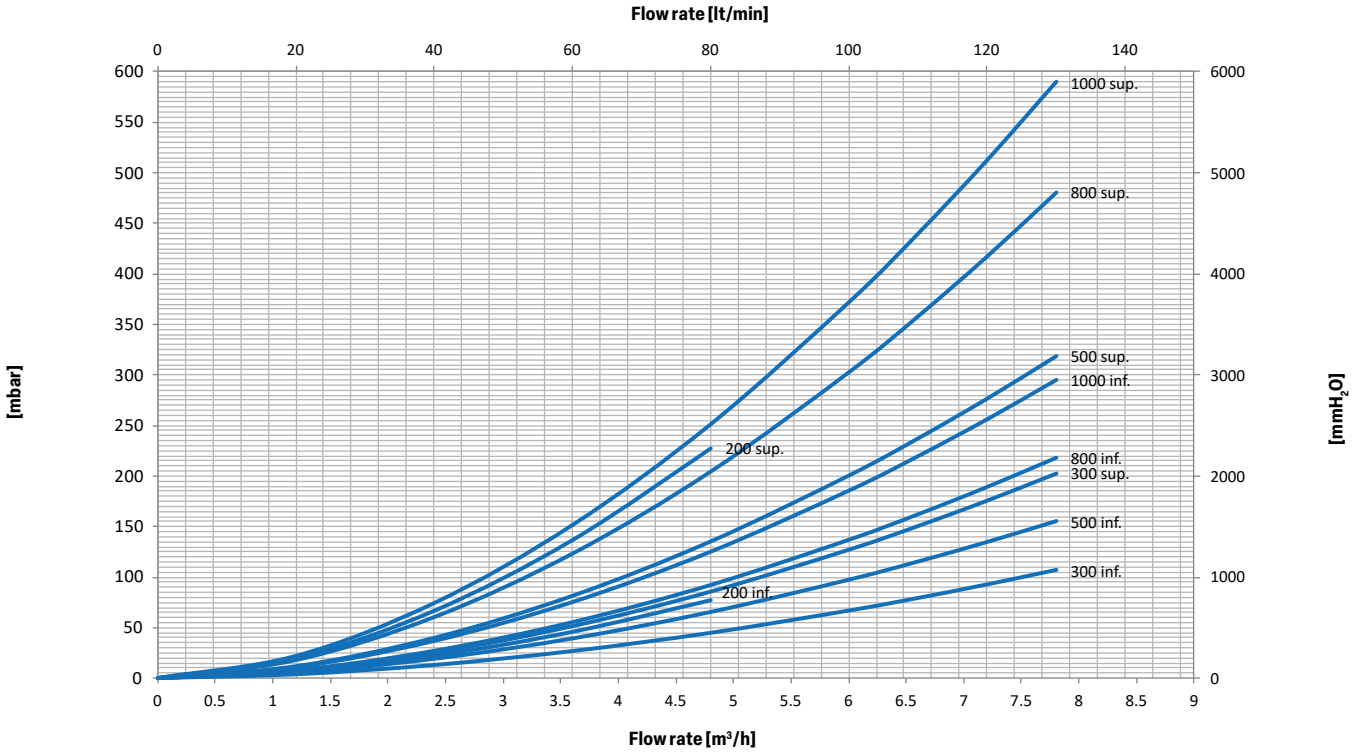

EXAMPLE OF INSTALLATION WITH **BOLLY® 2 XL**

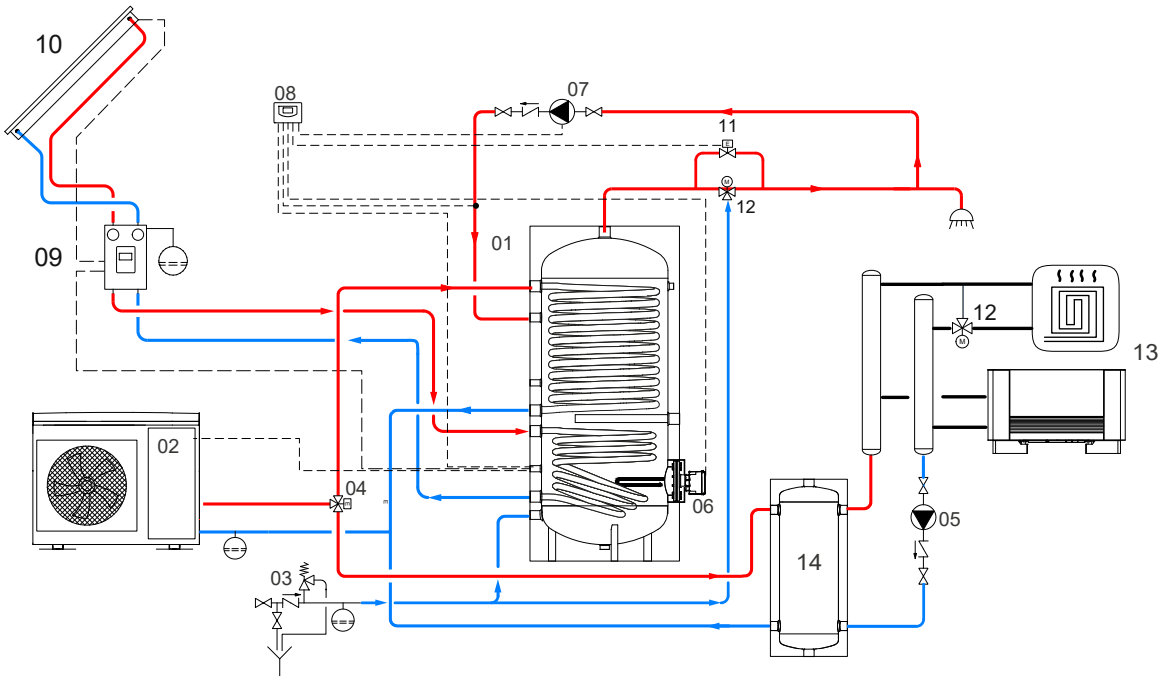

1	Bolly® 2 XL	5	Circulation group for heating/cooling system	9	Solar system circulation group	13	Heating units
2	Generator (Heat pump)	6	Electric immersion heater	10	Solar panels	14	Buffer tank
3	Hydraulic safety group	7	D.H.W. recirculation group	11	By-pass solenoid valve		
4	Motorized 3-way valve	8	FULL CONTROL electronic unit/ thermostat	12	Mixing valve		

The following schemes are purely illustrative. To realize the installation, always refer to a qualified technician.

BOLLY® 2 XL R

POLYWARM® COATED DOMESTIC HOT WATER CALORIFIER WITH 2 FIXED HEAT EXCHANGERS



POLYWARM® COATED DHW STORAGE

POLYWARM® COATED HEAT EXCHANGER

APPLICATION
BOLLY 2 XL R are designed to be used in systems with a heat pump and a boiler.
Production and storage of domestic hot water (DHW).
All the connections are aligned on the front and on the back for quick and easy installation.

MATERIAL
Mild steel Polywarm® coated (Attestation ACS - EN 16421)

HEAT EXCHANGER
Nr. 2 Mild steel Polywarm® coated heat exchangers.

INSULATION
HARD: High thermal insulation with ecological polyurethane hard foam.
HARD FOAM (CLASS "A" MODELS): hard polyurethane foam for high thermal insulation with a vacuum sheet of highly insulating material.
SOFT (DISMOUNTABLE): NOFIRE® polyester fleece 100% made of recyclable material, with high thermal insulation. Fire resistance class B-s2d0 according to EN 13501.
Grey PVC external lining.

CATHODE PROTECTION
Magnesium anode.

DRAIN
External confluence through drain connection.

GASKET- FLANGE PLATE
Silicone gaskets suitable for water intended for human consumption (tested according to 98/83/CE), max temperature up to 200°C. Mild steel inspection flange plate Polywarm® coated and connection for electric immersion heater.

WARRANTY
5 years (See general sales conditions and warranty)

ACCESSORIES AND SPARE PARTS
See Accessories section for the entire list.

		Model	Art. Nr.	Heat exchangers surface [m²] Upper	Heat exchangers surface [m²] Lower	ErP Energy efficiency class
 	**BOLLY® 2 XL R WB** HARD FOAM INSULATION	200	3134162320040	0,4	1,4	B
		300	3134162320041	0,8	1,9	B
		500	3134162320042	1,4	2,9	C
		800	3134162320043	1,7	4,6	B
		1000	3134162320044	1,9	5,6	C
 	**BOLLY® 2 XL R WB class A** HARD FOAM INSULATION	200	3134162320047	0,4	1,4	A
		300	3134162320048	0,8	1,9	A
		500	3134162320049	1,4	2,9	A
 	**BOLLY® 2 XL R WC** DISMOUNTABLE SOFT FLEECE INSULATION	800	3138162320045	1,7	4,6	C
		1000	3138162320046	1,9	5,6	C

ACCESSORIES

ELECTRIC IMMERSION HEATERS



Mod.	Heated volume by electric immersion heater [lt]	MONOPHASE 1,5 kW	MONOPHASE 2 kW	MONOPHASE 3 kW	THREEPHASE 4 kW	THREEPHASE 5 kW	THREEPHASE 6 kW	THREEPHASE 9 kW	THREEPHASE 12 kW
		5240000000051	5240000000052	5240000000053	5240000000047	5240000000048	5240000000049	5240000000050	5240000000031
		Ignition time from 10 °C to 45 °C with electric immersion heaters [min]			Ignition time from 10 °C to 45 °C with electric immersion heaters [min]				
200	159	285	214	142	//	//	//	//	//
300	235	421	316	210	158	//	//	//	//
500	413	741	555	370	278	222	//	//	//
800	668	1197	898	598	449	359	299	199	//
1000	874	1565	1174	783	587	470	391	261	196

FULL CONTROL electronic unit (mounted on tank)

Art. Nr.	for models
5220280000005	WB



For Class A models, only the version not pre-assembled on the tank is available.

Titanium anode

Art. Nr.	Model
5200000000008	200,300
5200000000009	500



Products designed and manufactured for using within temperature and pressure limits in accordance to Art. 4.3 Directive 2014/68/EU (P.E.D.)

BOLLY® **2 XL R**

POLYWARM® COATED DOMESTIC HOT WATER CALORIFIER WITH 2 FIXED HEAT EXCHANGERS

	STORAGE		HEAT EXCHANGER	
Model	Pmax	Tmax	Pmax	Tmax
200 ÷ 800	10 bar	90 °C	12 bar	110 °C
1000	8 bar			

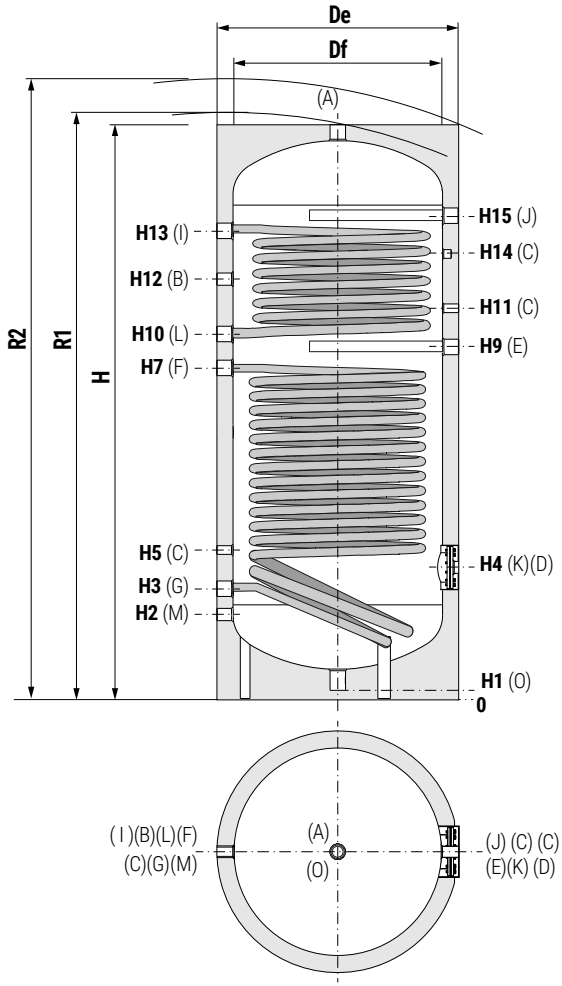

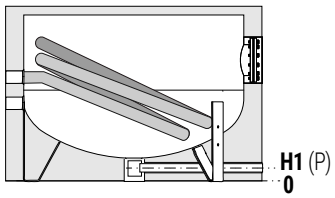

Only for models 800-1000

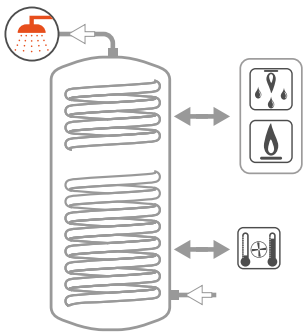

A	Domestic hot water outlet G 1" 1/4
B	Recirculation
C	Connection for instrumentation G 1/2" F
D	Connection for electric immersion heater
E	Connection for magnesium anode G 1"1/4 F
F	Lower heat exchanger inlet G 1"1/4 F
G	Lower heat exchanger outlet G 1"1/4 F
I	Upper heat exchanger inlet G 1"1/4 F
J	Connection for 2nd magnesium anode G 1"1/4 F (only for models ≥800)
K	Flange for inspection
L	Upper heat exchanger outlet G 1"1/4 F
M	Domestic cold water circuit inlet
O	Drain G 1" 1/4
P	Drain G 3/4"

BOLLY® 2 XL R WB + XL R WB CLASS A (HARD FOAM INSULATION)

Model	Volume	Weight	DE	H	R1	R2	H1	H2	H3	H4	H5	H7	H9
	[lt]	[Kg]	mm										
200	190	65	550	1435	//	1540	75	215	285	325	405	920	975
300	295	85	650	1485	//	1625	75	245	315	385	435	870	920
500	500	135	750	1785	//	1940	75	270	350	415	470	1035	1100
800	1040	305	900	2165	//	2345	100	340	450	485	580	1335	1410
1000	1440	370	1000	2220	//	2435	90	355	475	500	600	1400	1465

Model	H10	H11	H12	H13	H14	H15	K	M	B	A	D
	mm							Connections F			
200	1020	1075	765	1200	1200	//	Øi120/Øe180	3/4"	3/4"	1"1/4	1"1/2
300	995	1040	1110	1230	1230	//	Øi120/Øe180	1"	1"	1"1/4	1"1/2
500	1160	1220	1320	1480	1480	//	Øi120/Øe180	1"	1"	1"1/4	1"1/2
800	1485	1525	1645	1800	1690	1820	Øi170/Øe240	1"	1"	1"1/4	2"
1000	1525	1595	1655	1840	1720	1850	Øi170/Øe240	1"1/4	1"	1"1/2	2"

Net volume data according to EN 15332 available on product label.

BOLLY® 2 XL R WC (DISMOUNTABLE SOFT FLEECE INSULATION)

Model	Volume	Weight	DF	DE	H	R1	R2	H1	H2	H3	H4	H5	H7
	[lt]	[Kg]	[mm]										
800	1040	305	750	950	2165	2295	2365	100	340	450	485	580	1335
1000	1440	370	850	1050	2220	2380	2460	90	355	475	500	600	1400

Model	H9	H10	H11	H12	H13	H14	H15	K	M	B	A
	[mm]								Connections F		
800	1410	1485	1525	1645	1800	1690	1820	Øi170/Øe240	1"	1"	1"1/4
1000	1465	1525	1595	1655	1840	1720	1850	Øi170/Øe240	1"1/4	1"	1"1/2

Net volume data according to EN 15332 available on product label.

Products designed and manufactured for using within temperature and pressure limits in accordance to Art. 4.3 Directive 2014/68/EU (P.E.D.)

BOLLY® 1 HY XL

POLYWARM® COATED DOMESTIC HOT WATER CALORIFIER WITH 1 FIXED HEAT EXCHANGER AND INTEGRATED BUFFER TANK SPECIFIC FOR HEAT PUMPS



APPLICATION
Production and storage of domestic hot water (DHW). Heating/ cooling buffer tank for heat pumps.
MATERIAL
- *DHW STORAGE:* Mild steel Polywarm® coated (Attestation ACS - EN 16421)
- *ENERGY BUFFER hot-cold:* Mild steel.

HEAT EXCHANGER
Mild steel Polywarm® coated heat exchanger.
INSULATION
HARD: High thermal insulation with ecological polyurethane hard foam.
HARD FOAM (CLASS "A" MODELS): hard polyurethane foam for high thermal insulation with a vacuum sheet of highly insulating material.
Grey PVC external lining.

GASKET- FLANGE PLATE
Silicone gaskets suitable for water intended for human consumption (tested according to 98/83/CE), max temperature up to 200°C. Mild steel inspection flange plate Polywarm® coated and connection for electric immersion heater.
CATHODE PROTECTION (DHW STORAGE)
Magnesium anode.
WARRANTY
5 years (See general sales conditions and warranty)
ACCESSORIES AND SPARE PARTS
See Accessories section for the entire list.



	Model	Art. Nr.	Power of combinable heat pump [kWt]	Heat exchangers surface [m²]	ErP ENERGY EFFICIENCY CLASS
BOLLY® 1 HY XL WB HARD FOAM INSULATION	**250**	3104162330019	9-14	2,1	**B**
	300	3104162330017	9-14	3,4	**C**
	500	3104162330018	14-20	5,4	**C**
BOLLY® 1 HY XL WB class A HARD FOAM INSULATION	**300**	3104162330020	9-14	3,4	**A**
	500	3104162330021	14-20	5,4	**A**

ACCESSORIES

ELECTRIC IMMERSION HEATERS

Mod.	Heated volume by electric immersion heater [lt]	MONOPHASE 1,5 kW	MONOPHASE 2 kW	MONOPHASE 3 kW	THREEPHASE 4 kW	THREEPHASE 5 kW
		5240000000051	5240000000052	5240000000053	5240000000047	5240000000048
		Ignition time from 10 °C to 45 °C with electric immersion heaters [min]			Ignition time from 10 °C to 45 °C with electric immersion heaters [min]	
250	179	320	240	160	120	//
300	235	421	316	210	158	//
500	413	741	555	370	278	222

FULL CONTROL electronic unit (mounted on tank)

Art. Nr.	for models
5220280000004	WC
5220280000005	WB



For Class A models, only the version not pre-assembled on the tank is available.

HEAT MANAGER + electric immersion heater 1,5 kW + probe +3m cable

Art. Nr.	Output [kW]
5240000000074	1,5
5240000000075	2
5240000000076	3



Titanium anode

See Accessories section



Products designed and manufactured for using within temperature and pressure limits in accordance to Art. 4.3 Directive 2014/68/EU (P.E.D.)

BOLLY® 1 HY XL

POLYWARM® COATED DOMESTIC HOT WATER CALORIFIER WITH 1 FIXED HEAT EXCHANGER AND INTEGRATED BUFFER TANK SPECIFIC FOR HEAT PUMPS

STORAGE		HEAT EXCHANGER		BUFFER TANK	
Pmax	Tmax	Pmax	Tmax	Pmax	Tmax
10 bar	90 °C	12 bar	110 °C	4 bar	-10/+95 °C

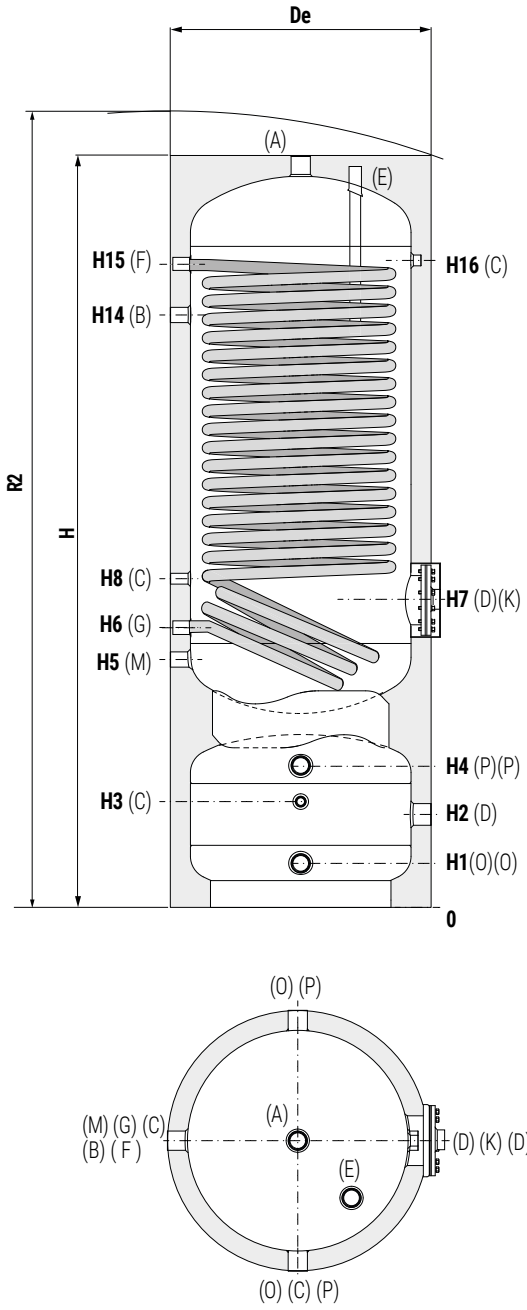

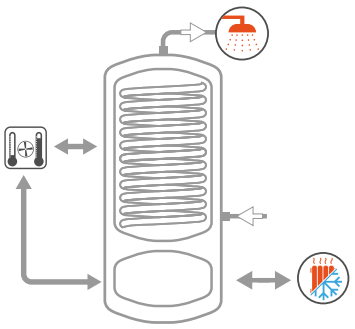

See TECHNICAL SUPPORT chapter for example of installation

A	Domestic hot water outlet
B	Recirculation / Domestic hot water outlet
C	Connection for instrumentation
D	Connection for electric immersion heater
E	Connection for magnesium anode G 1"1/4 F
F	Primary circuit inlet
G	Primary circuit outlet
K	Flange for inspection
M	Domestic cold water circuit inlet
O	Heating return/to generator
P	Heating delivery/from generator

Model	DHW storage volume	Buffer tank volume	De	H	R2	H1	H2	H3	H4	H5	H6
	[lt]		[mm]								
250	235	86	650	1635	1770	110	232	264	354	618	708
300	291	86	650	1875	1990	110	232	264	354	618	708
500	498	108	750	2225	2360	125	230	245	335	639	729

Model	H7	H8	H14	H15	H16	A-F-G	B-M	C	D	P-O
	[mm]					Connections F				
250	768	818	1233	1363	1368	1"1/4	1"	1/2"	1"1/2	1"1/4
300	768	818	1478	1598	1598	1"1/4	1"	1/2"	1"1/2	1"1/4
500	794	849	1709	1869	1869	1"1/4	1"	1/2"	1"1/2	1"1/4

Net volume data according to EN 15332 available on product label.

Products designed and manufactured for using within temperature and pressure limits in accordance to Art. 4.3 Directive 2014/68/EU (P.E.D.)

BOLLY® **1 HY XL**

HEAT EXCHANGERS TECHNICAL DATA



Data have been calculated on following basis:
1) Primary circuit at T1 and proper energy source;
2) Production of DHW in continuous from 10 °C to t2;
3) DHW that can be taken in the first 10' and in the first hour from storage at t2, input 10 °C and output 45 °C;
4) Non-scaling sanitary water

Model	Primary flow rate	Ignition time (minutes) from 10 °C to t2 and primary at T1				Maximum power exchange (kW) with primary at T1, secondary within 10-45 °C and constant use of DHW production				DHW continuous production lt/h within 10-45 °C and primary at T1HW production			
	[m³/h]	T1/t2				T1				T1			
		55/50	65/60	70/60	80/60	55	65	70	80	55	65	70	80
300	3	44	46	32	22	30	45	52	66	751	1104	1281	1640
	1,5	55	57	41	27	27	39	44	56	664	951	1093	1377
250	3	47	49	34	23	22	33	39	50	554	821	956	1229
	1,5	55	58	41	27	20	29	34	43	501	725	837	1062
500	3,5	49	51	36	24	48	70	81	103	1198	1740	2009	2551
	1,75	62	65	47	31	43	60	68	85	1060	1487	1696	2114

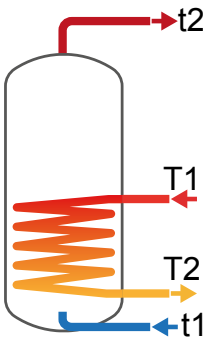

Model	Primary flow rate	DHW produced in the first 10 minutes in lt/10' input 10 °C output 45 °C, storage at t2 and primary at T1				DHW produced in the first hour in lt/60' input 10 °C output 45 °C, storage at t2 and primary at T1				Heat exchanger pressure drop	
	[m³/h]	T1/t2				T1/t2				[mmH$_2$O]	[mbar]
		55/50	65/60	70/60	80/60	55/50	65/60	70/60	80/60		
300	3	458	600	629	689	368	1299	1441	1728	830,2	81,4
	1,5	443	574	598	645	363	1176	1290	1517	243,2	23,8
250	3	360	471	494	539	711	991	1099	1317	525	53
	1,5	351	455	474	511	668	914	1004	1184	154	15
500	3,5	769	1001	1046	1137	625	2103	2319	2752	1263,9	123,9
	1,75	746	959	994	1064	617	1901	2068	2403	370,8	36,4

HEAT EXCHANGERS PRESSURE DROP

Heat exchangers surface [m²]	
250	2,1
300	3,4
500	5,4

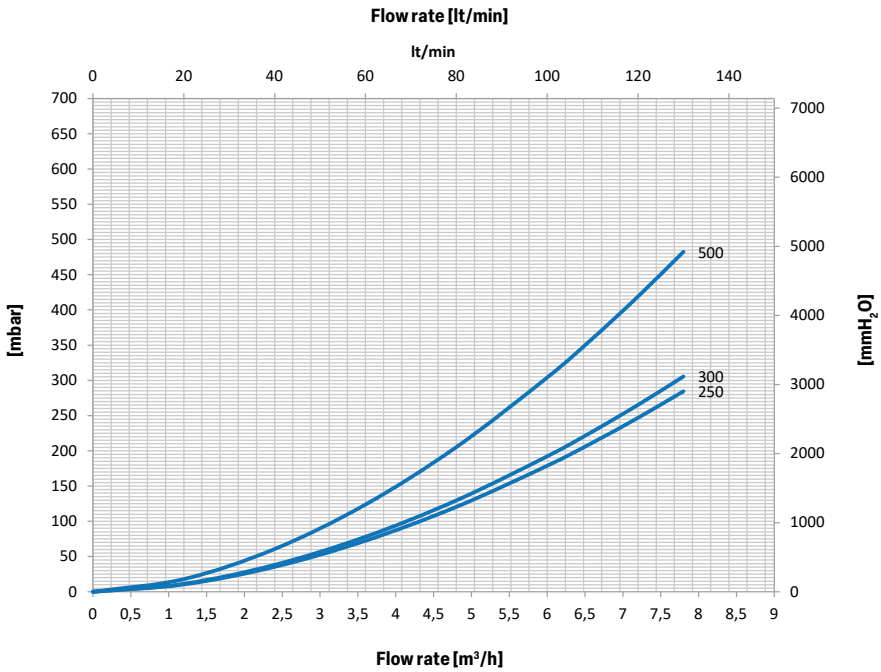

BOLLY® **1 HY XL**

HEAT EXCHANGERS TECHNICAL DATA



Heat Exchanger outPut referred to temperature and flow rate of primary circuit and with secondary at 10/45°C at maximum withdrawal of producible DHW (Upper limit of the curves referred to maximum primary flow rate in the heat exchanger, while the lower limit in the curves refer to the minimum primary flow rate)

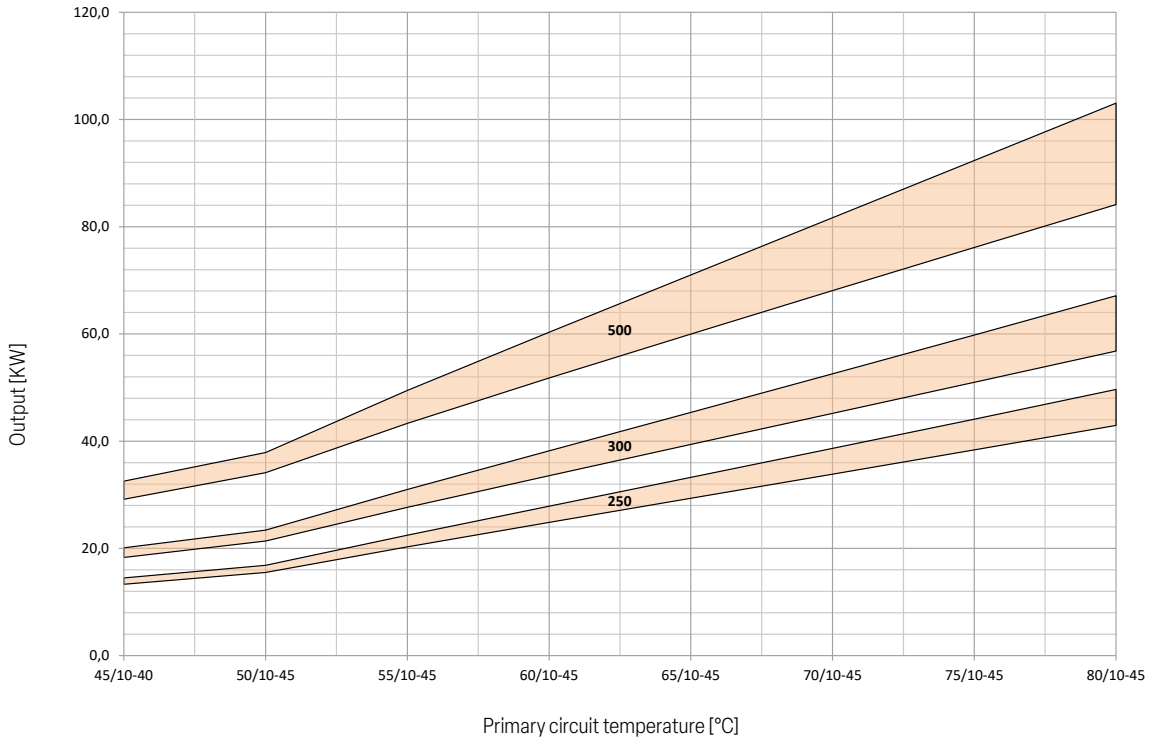

Model	250		300		500	
Flow rate [m³/h]	MAX	MIN	MAX	MIN	MAX	MIN
	3	1,5	3	1,5	3,5	1,75

EXAMPLE OF INSTALLATION WITH **BOLLY® 1 HY XL**

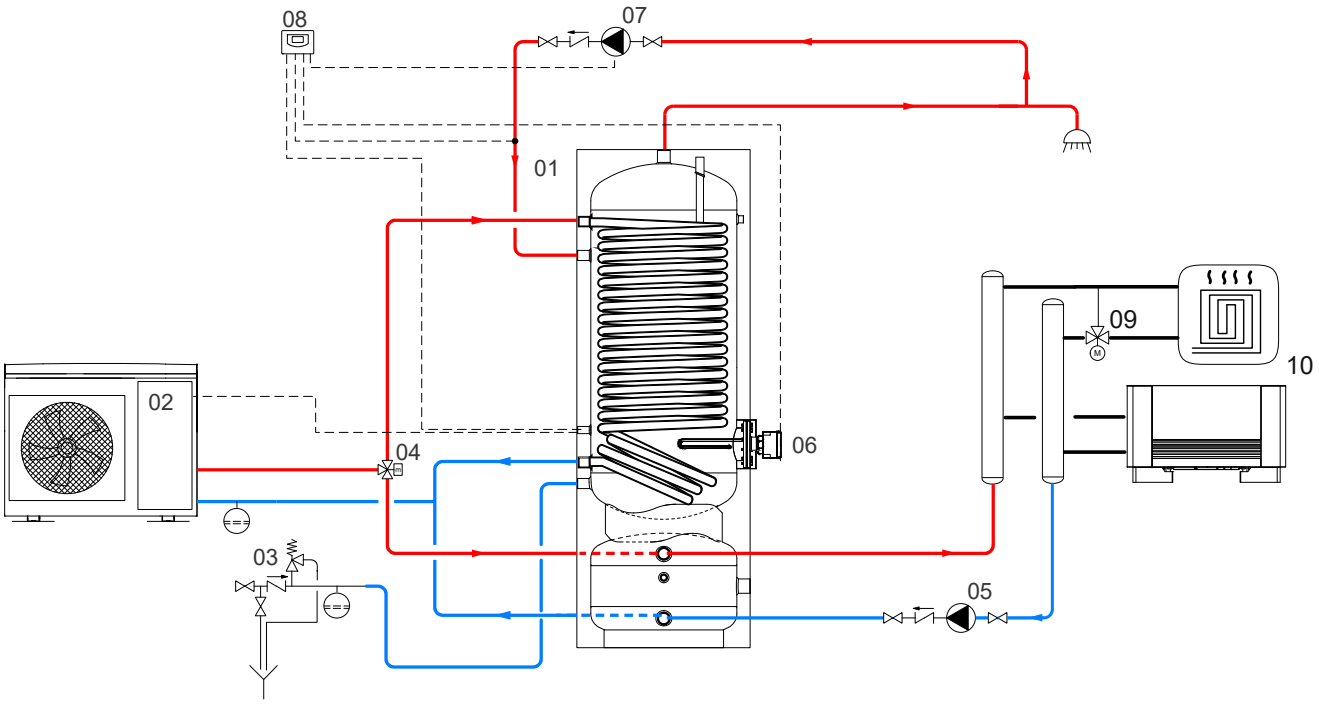

01	Bolly® 1 HY XL	04	Motorized 3-way valve	07	D.H.W. recirculation group	10	Heating units
02	Generator (Heat pump)	05	Circulation group for heating/cooling system	08	FULL CONTROL electronic unit / thermostat		
03	Hydraulic safety group	06	Electric immersion heater	09	Thermostatic mixing valve		

The following schemes are purely illustrative. To realize the installation, always refer to a qualified technician.

BOLLY® **2 HY XL**

POLYWARM® COATED DOMESTIC HOT WATER CALORIFIER WITH 2 FIXED HEAT EXCHANGERS AND INTEGRATED BUFFER TANK SPECIFIC FOR HEAT PUMPS



APPLICATION
Production and storage of domestic hot water (DHW). Heating/ cooling buffer tank for heat pumps.
MATERIAL
- ***DHW STORAGE:*** Mild steel Polywarm® coated (Attestation ACS - EN 16421)
- ***ENERGY BUFFER hot-cold:*** Mild steel.

HEAT EXCHANGER
Nr. 2 Mild steel Polywarm® coated heat exchangers.
INSULATION
HARD: High thermal insulation with ecological polyurethane hard foam.
HARD FOAM (CLASS "A" MODELS): hard polyurethane foam for high thermal insulation with a vacuum sheet of highly insulating material.
Grey PVC external lining.

GASKET- FLANGE PLATE
Silicone gaskets suitable for water intended for human consumption (tested according to 98/83/CE), max temperature up to 200°C. Mild steel inspection flange plate Polywarm® coated and connection for electric immersion heater.
CATHODE PROTECTION (DHW STORAGE)
Magnesium anode.
WARRANTY
5 years (See general sales conditions and warranty)
ACCESSORIES AND SPARE PARTS
See Accessories section for the entire list.

POLYWARM® COATED DHW STORAGE
POLYWARM® COATED HEAT EXCHANGER

	Model	Art. Nr.	Power of combinable heat pump	Heat exchangers surface [m²]		ErP
			[kWt]	Upper	Lower	ENERGY EFFICIENCY CLASS
BOLLY® 2 HY XL WB HARD FOAM INSULATION	**300**	3134162320004	9-14	1,9	0,9	**C**
	500	3134162320005	14-20	3,1	1,4	**C**
BOLLY® 2 HY XL WB class A HARD FOAM INSULATION	**300**	3134162320012	9-14	1,9	0,9	**A**
	500	3134162320013	14-20	3,1	1,4	**A**

ACCESSORIES

ELECTRIC IMMERSION HEATERS

Mod.	Heated volume by electric immersion heater [lt]	MONOPHASE			THREEPHASE	
		1,5 kW	**2** kW	**3** kW	**4** kW	**5** kW
		5240000000051	5240000000052	5240000000053	5240000000047	5240000000048
		Ignition time from 10 °C to 45 °C with electric immersion heaters [min]			Ignition time from 10 °C to 45 °C with electric immersion heaters [min]	
300	235	421	316	210	158	//
500	413	741	555	370	278	222

FULL CONTROL electronic unit (mounted on tank)

Art. Nr.	for models	
5220280000005	WB	

For Class A models, only the version not pre-assembled on the tank is available.

Thermometer

Art. Nr.	
5032240000107	
5 units box	

Products designed and manufactured for using within temperature and pressure limits in accordance to Art. 4.3 Directive 2014/68/EU (P.E.D.)

BOLLY® **2 HY XL**

POLYWARM® COATED DOMESTIC HOT WATER CALORIFIER WITH 2 FIXED HEAT EXCHANGERS AND INTEGRATED BUFFER TANK SPECIFIC FOR HEAT PUMPS

STORAGE		HEAT EXCHANGER		BUFFER TANK	
Pmax	Tmax	Pmax	Tmax	Pmax	Tmax
10 bar	95 °C	12 bar	110 °C	4 bar	-10/+95 °C

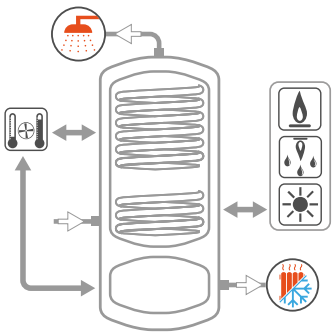

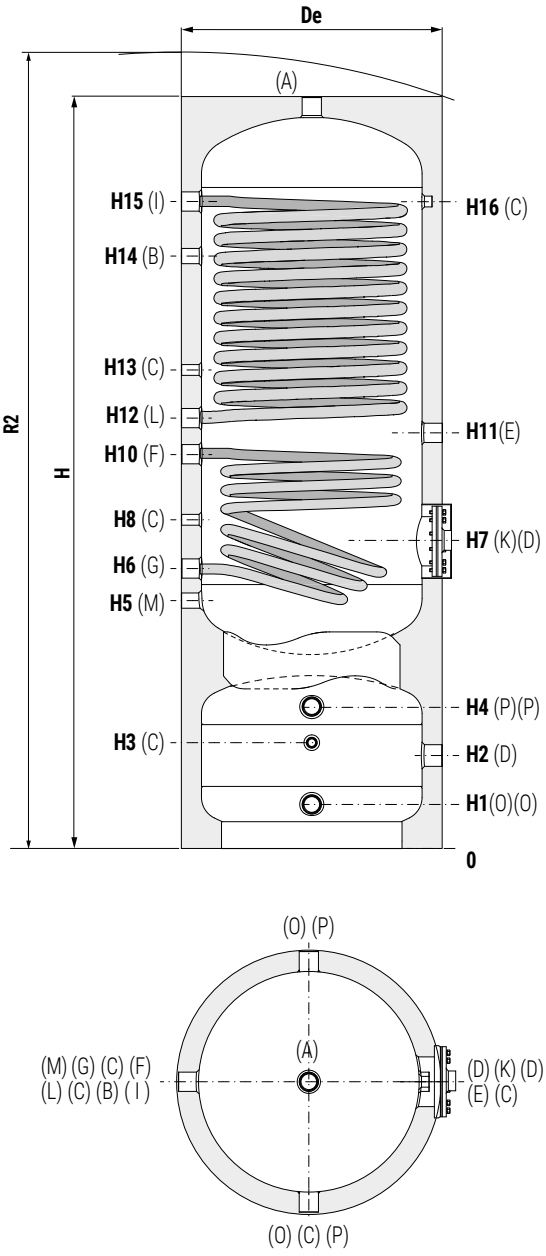

A	Domestic hot water outlet
B	Recirculation / Domestic hot water outlet
C	Connection for instrumentation
D	Connection for electric immersion heater
E	Connection for magnesium anode G 1"1/4 F
F	Primary circuit inlet
G	Primary circuit outlet
I	Upper heat exchanger inlet
L	Upper heat exchanger outlet
K	Flange for inspection
M	Domestic cold water circuit inlet
O	Heating return/to generator
P	Heating delivery/from generator

Model	DHW storage volume	Buffer tank volume	Weight	De	H	R2	H1	H2	H3	H4	H5	H6	H7	H8
	[lt]		[kg]	[mm]										
300	291	86	116	650	1875	1990	110	232	264	354	618	698	768	818
500	498	108	194	750	2225	2360	125	230	245	335	639	729	794	849

Model	H10	H11	H12	H13	H14	H15	H16	K	A-F-G-L-I	B-M	C	D	P-O
	[mm]								Connections F				
300	983	993	1073	1193	1477	1613	1613	Øi120/Øe180	1"1/4	1"	1/2"	1"1/2	1"1/4
500	1054	106	1144	1264	1474	1859	1859	Øi120/Øe180	1"1/4	1"	1/2"	1"1/2	1"1/4

Net volume data according to EN 15332 available on product label.

Products designed and manufactured for using within temperature and pressure limits in accordance to Art. 4.3 Directive 2014/68/EU (P.E.D.)

BOLLY® **2 HY XL**

HEAT EXCHANGERS TECHNICAL DATA



Data have been calculated on following basis:
1) Primary circuit at T1 and proper energy source;
2) Production of DHW in continuous from 10 °C to t2;
3) DHW that can be taken in the first 10' and in the first hour from storage at t2, input 10 °C and output 45 °C;
4) Non-scaling sanitary water

UPPER
HEAT EXCHANGER

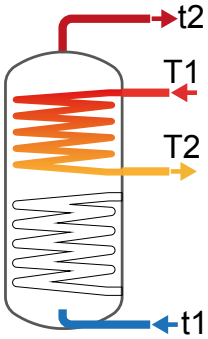

Model	Primary flow rate	Ignition time (minutes) from 10 °C to t2 and primary at T1				Maximum power exchange (kW) with primary at T1, secondary within 10-45 °C and constant use of DHW production				DHW continuous production lt/h within 10-45 °C and primary at T1HW production			
	[m³/h]	T1/t2				T1				T1			
		55/50	65/60	70/60	80/60	55	65	70	80	55	65	70	80
300	3	43	45	31	20	20	30	35	46	501	747	871	1123
	1,5	50	52	37	24	18	27	31	39	454	661	765	975
500	3,5	46	48	34	22	33	49	56	72	812	1198	1392	1786
	1,75	47	49	35	23	30	42	49	62	732	1050	1208	1525

Model	Primary flow rate	DHW produced in the first 10 minutes in lt/10' input 10 °C output 45 °C, storage at t2 and primary at T1				DHW produced in the first hour in lt/60' input 10 °C output 45 °C, storage at t2 and primary at T1				Heat exchanger pressure drop	
	[m³/h]	T1/t2				T1/t2				[mmH$_2$O]	[mbar]
		55/50	65/60	70/60	80/60	55/50	65/60	70/60	80/60		
300	3	226	400	421	463	245	873	972	1174	88,4	8,7
	1,5	225	386	403	438	242	805	888	1056	24,5	2,4
500	3,5	329	601	633	699	360	1360	1515	1830	70,2	6,9
	1,75	328	576	603	656	355	1242	1368	1621	20,9	2,0

LOWER
HEAT EXCHANGER

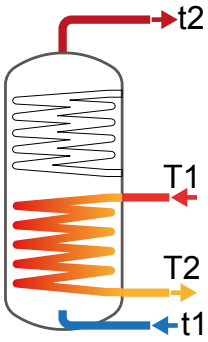

Model	Primary flow rate	Ignition time (minutes) from 10 °C to t2 and primary at T1				Maximum power exchange (kW) with primary at T1, secondary within 10-45 °C and constant use of DHW production				DHW continuous production lt/h within 10-45 °C and primary at T1HW production			
	[m³/h]	T1/t2				T1				T1			
		55/50	65/60	70/60	80/60	55	65	70	80	55	65	70	80
300	3	127	132	92	60	9,9	15,0	17,5	22,8	243	368	431	561
	1,5	150	157	107	69	9,1	13,6	15,8	20,4	220	330	385	499
500	3,5	141	146	102	67	15,5	23,2	27,1	35,1	380	572	669	868
	1,75	139	145	101	66	14,2	21,0	24,4	31,3	346	514	598	771

Model	Primary flow rate	DHW produced in the first 10 minutes in lt/10' input 10 °C output 45 °C, storage at t2 and primary at T1				DHW produced in the first hour in lt/60' input 10 °C output 45 °C, storage at t2 and primary at T1				Heat exchanger pressure drop	
	[m³/h]	T1/t2				T1/t2				[mmH$_2$O]	[mbar]
		55/50	65/60	70/60	80/60	55/50	65/60	70/60	80/60		
300	3	335	477	488	509	345	710	761	865	61,5	6,0
	1,5	335	471	480	499	343	679	724	815	16,5	1,6
500	3,5	486	698	714	748	501	1060	1138	1297	100,1	9,8
	1,75	486	688	703	731	499	1014	1082	1219	27,4	2,7

HEAT EXCHANGERS PRESSURE DROP

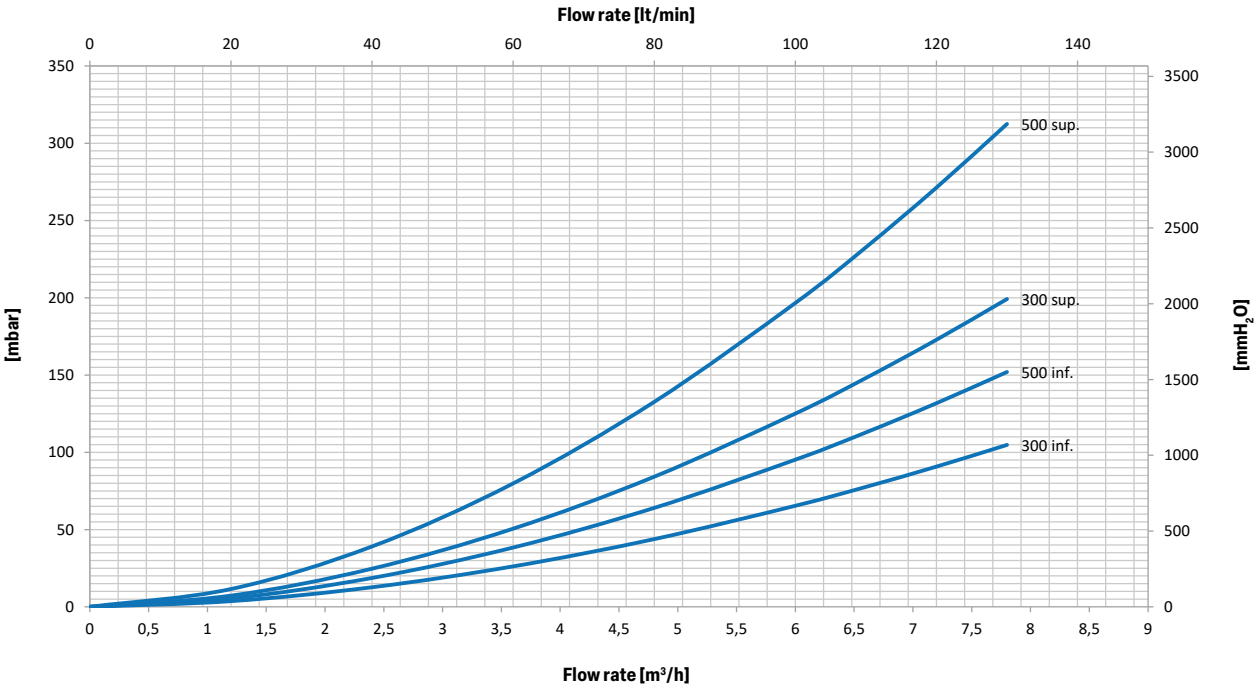

BOLLY® **2 HY XL**

HEAT EXCHANGERS TECHNICAL DATA



BOLLY® 2 HY XL heat exchanger output depending on the temperature and flow rate of the primary circuit and with secondary 10/45 ° C at the maximum withdrawal of DHW. The upper curve that delimits the operating area of each exchanger corresponds to the "MAX" flow rate of the primary indicated in the table; the lower curve corresponds to the "MIN" flow rate.

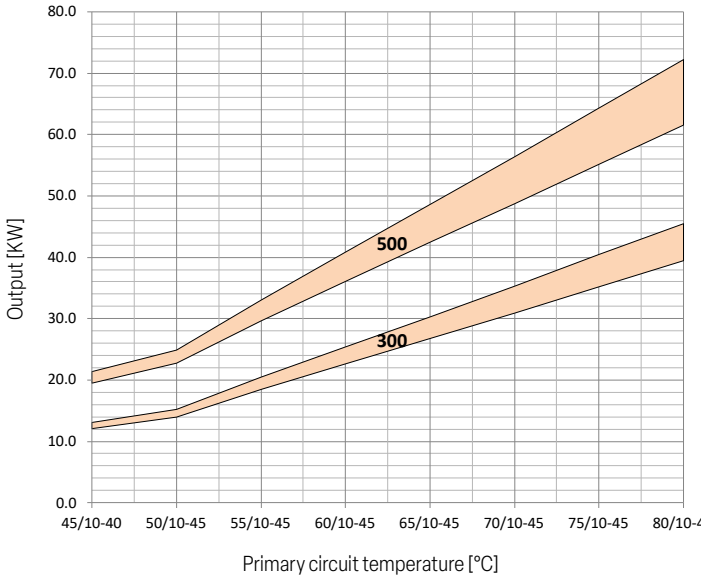

Upper heat exchangers	300		500	
Flow rate [m³/h]	MAX	MIN	MAX	MIN
	3	1,5	3,5	1,75

Heat exchanger Lower	300		500	
Flow rate [m³/h]	MAX	MIN	MAX	MIN
	3	1,5	3,5	1,75

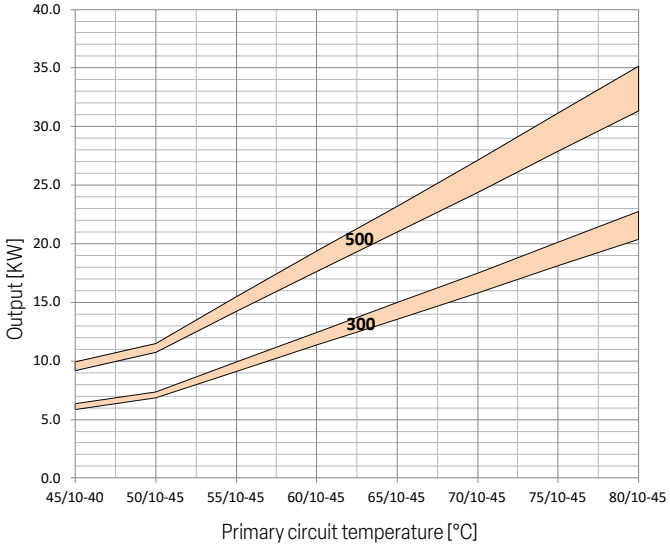

EXAMPLE OF INSTALLATION WITH **BOLLY® 2 HY XL**

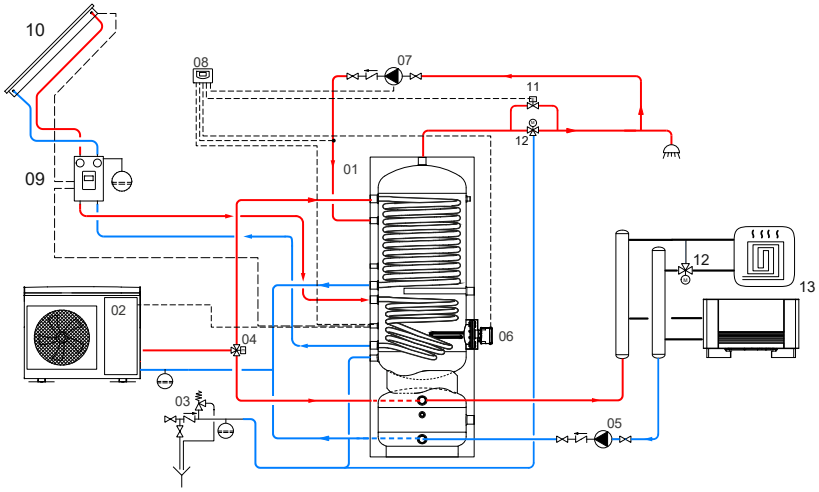

01	Bolly® 2 HY XL	05	Circulation group for heating/cooling system	09	Solar system circulation group	13	Heating units
02	Generator (Heat pump)	06	Electric immersion heater	10	Solar panels		
03	Hydraulic safety group	07	D.H.W. recirculation group	11	By-pass solenoid valve		
04	Motorized 3-way valve	08	FULL CONTROL electronic unit /thermostat	12	Thermostatic mixing valve		

The following schemes are purely illustrative. To realize the installation, always refer to a qualified technician.

BOLLY® 2 HY XL R

POLYWARM® COATED DOMESTIC HOT WATER CALORIFIER WITH 2 FIXED HEAT EXCHANGERS AND INTEGRATED BUFFER TANK SPECIFIC FOR HEAT PUMPS



POLYWARM® COATED DHW STORAGE

POLYWARM® COATED HEAT EXCHANGER

APPLICATION
BOLLY 2 HY XL R are designed to be used in systems with a heat pump and a boiler.
Production and storage of domestic hot water (DHW). Heating/ cooling buffer tank for heat pumps.

MATERIAL
- ***DHW STORAGE:*** Mild steel Polywarm® coated (Attestation ACS - EN 16421)
- ***ENERGY BUFFER hot-cold:*** Mild steel.

HEAT EXCHANGER
Nr. 2 Mild steel Polywarm® coated heat exchangers.

INSULATION
HARD: High thermal insulation with ecological polyurethane hard foam.
HARD FOAM (CLASS "A" MODELS): hard polyurethane foam for high thermal insulation with a vacuum sheet of highly insulating material.
Grey PVC external lining.

GASKET- FLANGE PLATE
Silicone gaskets suitable for water intended for human consumption (tested according to 98/83/CE), max temperature up to 200°C. Mild steel inspection flange plate Polywarm® coated and connection for electric immersion heater.

CATHODE PROTECTION (DHW STORAGE)
Magnesium anode.

WARRANTY
5 years (See general sales conditions and warranty)

ACCESSORIES AND SPARE PARTS
See Accessories section for the entire list.

	Model	Art. Nr.	Power of combinable heat pump	Heat exchangers surface [m²]		ErP
			[kWt]	Upper	Lower	ENERGY EFFICIENCY CLASS
BOLLY® 2 HY XL R WB HARD FOAM INSULATION	**300**	3134162320045	9-14	0,8	1,9	**C**
	500	3134162320046	14-20	1,4	2,9	**C**
BOLLY® 2 HY XL R WB class A HARD FOAM INSULATION	**300**	3134162320050	9-14	0,8	1,9	**A**
	500	3134162320051	14-20	1,4	2,9	**A**

ACCESSORIES

ELECTRIC IMMERSION HEATERS

Mod.	Heated volume by electric immersion heater [lt]	MONOPHASE 1,5 kW	MONOPHASE 2 kW	MONOPHASE 3 kW	THREEPHASE 4 kW	THREEPHASE 5 kW
		5240000000051	5240000000052	5240000000053	5240000000047	5240000000048
		Ignition time from 10 °C to 45 °C with electric immersion heaters [min]			Ignition time from 10 °C to 45 °C with electric immersion heaters [min]	
300	235	421	316	210	158	//
500	413	741	555	370	278	222

FULL CONTROL electronic unit (mounted on tank)

Art. Nr.	for models
5220280000005	WB



For Class A models, only the version not pre-assembled on the tank is available.

Thermometer

Art. Nr.
5032240000107
5 units box



Products designed and manufactured for using within temperature and pressure limits in accordance to Art. 4.3 Directive 2014/68/EU (P.E.D.)

BOLLY® **2 HY XL R**

POLYWARM® COATED DOMESTIC HOT WATER CALORIFIER WITH 2 FIXED HEAT EXCHANGERS AND INTEGRATED BUFFER TANK SPECIFIC FOR HEAT PUMPS

STORAGE		HEAT EXCHANGER		BUFFER TANK	
Pmax	Tmax	Pmax	Tmax	Pmax	Tmax
10 bar	90 °C	12 bar	110 °C	4 bar	-10/+95 °C

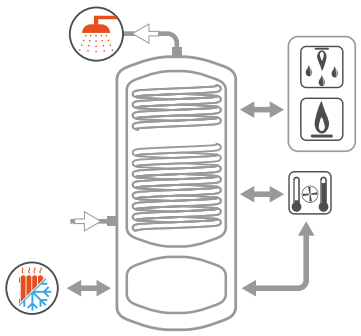

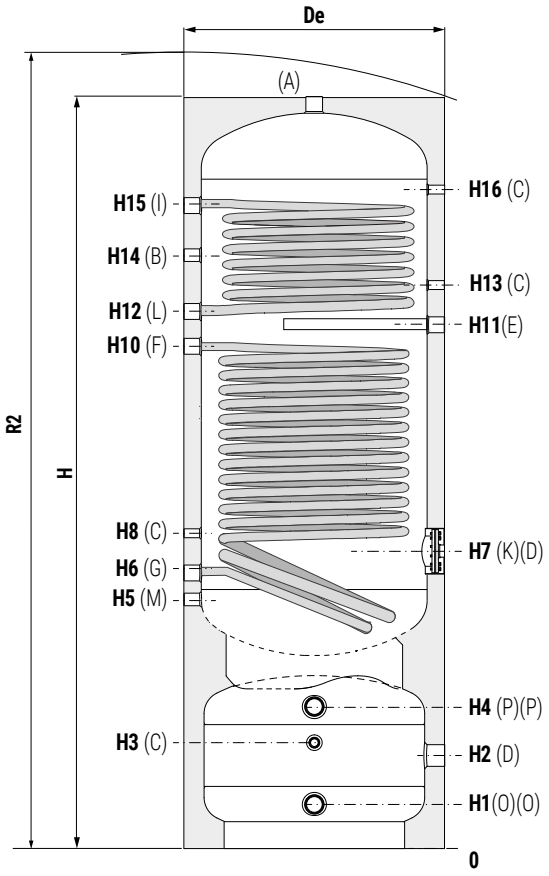

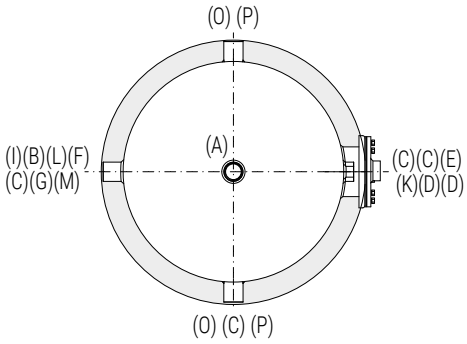

A	Domestic hot water outlet
B	Recirculation / Domestic hot water outlet
C	Connection for instrumentation
D	Connection for electric immersion heater
E	Connection for magnesium anode G 1"1/4 F
F	Primary circuit inlet
G	Primary circuit outlet
I	Upper heat exchanger inlet
L	Upper heat exchanger outlet
K	Flange for inspection
M	Domestic cold water circuit inlet
O	Heating return/to generator
P	Heating delivery/from generator

Model	DHW storage volume	Buffer tank volume	Weight	De	H	R2	H1	H2	H3	H4	H5	H6	H7
	[lt]		[kg]	[mm]									
300	295	90	116	650	1875	1990	110	235	265	355	630	700	770
500	500	110	194	750	2170	2310	125	230	245	335	650	730	795

Model	H8	H10	H11	H12	H13	H14	H15	H16	A-G-F-L-I	B-M	C	D	P-O
	[mm]								Connections F				
300	820	1255	1305	1380	1425	1500	1615	1615	1"1/4	1"	1/2"	1"1/2	1"1/4
500	850	1415	1480	1540	1600	1700	1860	1860	1"1/4	1"	1/2"	1"1/2	1"1/4

Net volume data according to EN 15332 available on product label.

Products designed and manufactured for using within temperature and pressure limits in accordance to Art. 4.3 Directive 2014/68/EU (P.E.D.)

BOLLY® **2 HY DUO SOLAR**

POLYWARM® COATED DOMESTIC HOT WATER CALORIFIER WITH 2 FIXED HEAT EXCHANGERS AND INTEGRATED BUFFER TANK SPECIFIC FOR HEAT PUMPS WITH 1 FIXED HEAT EXCHANGER



APPLICATION
Production and storage of domestic hot water (DHW). Heating/ cooling buffer tank for heat pumps.
MATERIAL
- ***DHW STORAGE:*** Mild steel Polywarm® coated (Attestation ACS - EN 16421)
- ***ENERGY BUFFER hot-cold:*** Mild steel.

HEAT EXCHANGER
- ***DHW STORAGE:*** Nr. 2 Mild steel Polywarm® coated heat exchangers.
- ***ENERGY BUFFER hot-cold:*** Nr. 1 Mild steel heat exchangers

INSULATION
HARD: High thermal insulation with ecological polyurethane hard foam.
Grey PVC external lining.

GASKET- FLANGE PLATE
Silicone gaskets suitable for water intended for human consumption (tested according to 98/83/CE), max temperature up to 200°C. Mild steel inspection flange plate Polywarm® coated and connection for electric immersion heater.
CATHODE PROTECTION (DHW STORAGE)
Magnesium anode.
WARRANTY
5 years (See general sales conditions and warranty)
ACCESSORIES AND SPARE PARTS
See Accessories section for the entire list.

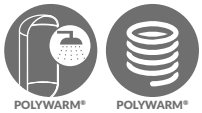

	Model	Art. Nr.	Power of combinable heat pump [kWt]	Heat exchangers surface [m²] Upper	Heat exchangers surface [m²] Lower	Energy buffer heat exchangers surface [m²]	ErP ENERGY EFFICIENCY CLASS
  **BOLLY® 2 HY DUO SOLAR** HARD FOAM INSULATION	**250**	3134162320037	5-7	1,2	0,5	1,1	**C**

ACCESSORIES

FULL CONTROL electronic unit (mounted on tank)

Art. Nr.	for models	
5220280000005	WB	

For Class A models, only the version not pre-assembled on the tank is available.

Thermometer

Art. Nr.	
5032240000107 5 units box	

Products designed and manufactured for using within temperature and pressure limits in accordance to Art. 4.3 Directive 2014/68/EU (P.E.D.)

BOLLY® **2 HY DUO SOLAR**

POLYWARM® COATED DOMESTIC HOT WATER CALORIFIER WITH 2 FIXED HEAT EXCHANGERS AND INTEGRATED BUFFER TANK SPECIFIC FOR HEAT PUMPS WITH 1 FIXED HEAT EXCHANGER

STORAGE		HEAT EXCHANGER		BUFFER TANK	
Pmax	Tmax	Pmax	Tmax	Pmax	Tmax
10 bar	95 °C	12 bar	110 °C	4 bar	-10/+95 °C

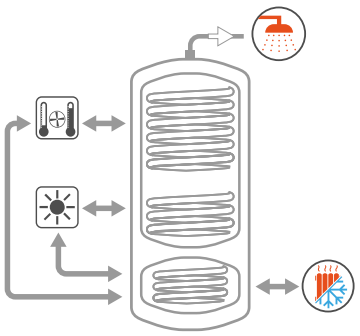

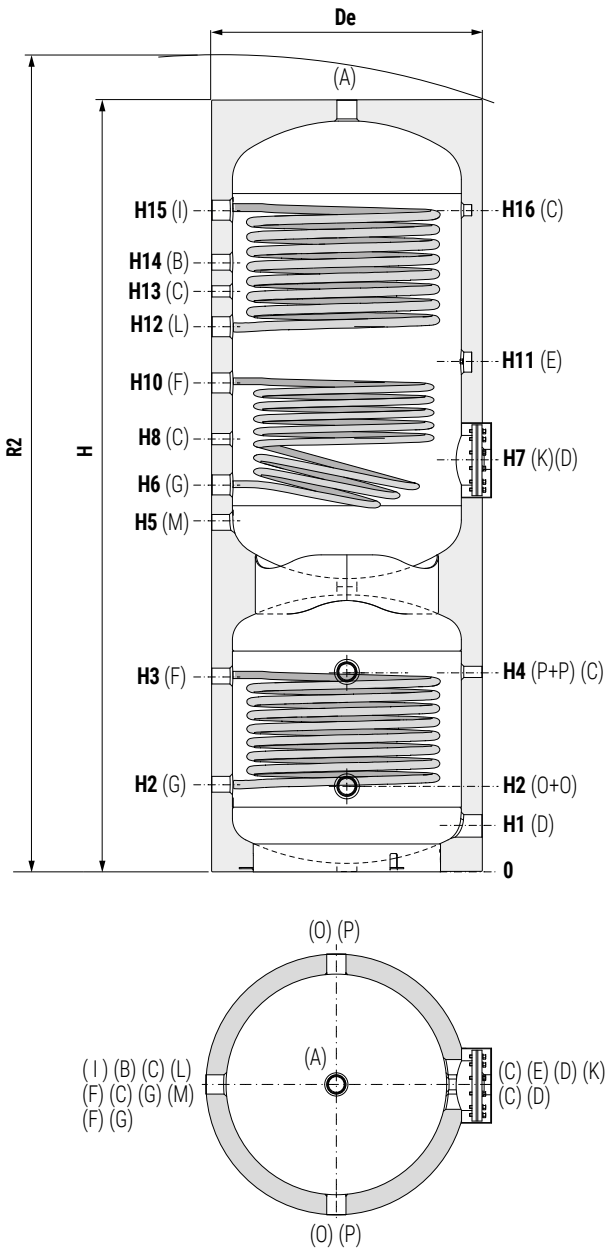

A	Domestic hot water outlet
B	Recirculation / Domestic hot water outlet
C	Connection for instrumentation
D	Connection for electric immersion heater
E	Connection for magnesium anode G 1"1/4 F
F	Primary circuit inlet
G	Primary circuit outlet
I	Upper heat exchanger inlet
L	Upper heat exchanger outlet
K	Flange for inspection
M	Domestic cold water circuit inlet
O	Heating return/to generator
P	Heating delivery/from generator

Model	DHW storage volume	Buffer tank volume	Weight	De	H	R2	H1	H2	H3	H4	H5	H6	H7	H8	H9	H10
	[lt]		[kg]	[mm]												
250	233	135	116	650	1875	1990	110	210	470	480	840	930	990	1040	//	1175

Model	H11	H12	H13	H14	H15	H16	A-F-G-L-I	B-M	C	D	P-O
	[mm]						Connections F				
250	1225	1310	1395	1465	1590	1590	1"1/4	1"	1/2"	1"1/2	1"1/4

Net volume data according to EN 15332 available on product label.

Products designed and manufactured for using within temperature and pressure limits in accordance to Art. 4.3 Directive 2014/68/EU (P.E.D.)

BOLLY® **2 HY DUO SOLAR**

HEAT EXCHANGERS TECHNICAL DATA



Data have been calculated on following basis:
1) Primary circuit at T1 and proper energy source;
2) Production of DHW in continuous from 10 °C to t2;
3) DHW that can be taken in the first 10' and in the first hour from storage at t2, input 10 °C and output 45 °C;
4) Non-scaling sanitary water

UPPER
HEAT EXCHANGER

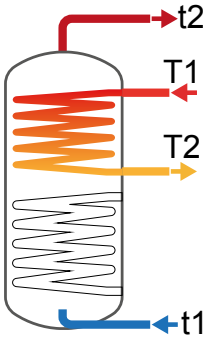

Model	Primary flow rate	Ignition time (minutes) from 10 °C to t2 and primary at T1				Maximum power exchange (kW) with primary at T1, secondary within 10-45 °C and constant use of DHW production				DHW continuous production lt/h within 10-45 °C and primary at T1HW production			
	[m³/h]	T1/t2				T1				T1			
		55/50	65/60	70/60	80/60	55	65	70	80	55	65	70	80
250	2,5	42	44	31	20	12,7	19,0	22,2	28,6	314	469	548	709
	1,25	49	51	36	24	11,5	16,9	19,6	25,1	285	418	485	622

Model	Primary flow rate	DHW produced in the first 10 minutes in lt/10' input 10 °C output 45 °C, storage at t2 and primary at T1				DHW produced in the first hour in lt/60' input 10 °C output 45 °C, storage at t2 and primary at T1				Heat exchanger pressure drop	
	[m³/h]	T1/t2				T1/t2				[mmH$_2$O]	[mbar]
		55/50	65/60	70/60	80/60	55/50	65/60	70/60	80/60		
250	2,5	52	78	91	118	251	375	438	567	187,0	18,3
	1,25	48	70	81	104	228	334	388	498	55,0	5,4

LOWER
HEAT EXCHANGER

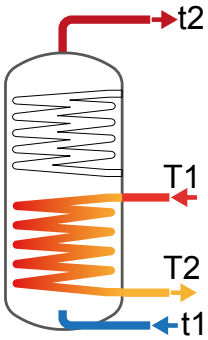

Model	Primary flow rate	Ignition time (minutes) from 10 °C to t2 and primary at T1				Maximum power exchange (kW) with primary at T1, secondary within 10-45 °C and constant use of DHW production				DHW continuous production lt/h within 10-45 °C and primary at T1HW production			
	[m³/h]	T1/t2				T1				T1			
		55/50	65/60	70/60	80/60	55	65	70	80	55	65	70	80
250	2,5	184	192	134	87	5,4	8,2	9,6	12,5	133	201	236	308
	1,25	205	214	149	98	5,0	7,5	8,7	11,3	122	184	215	279

Model	Primary flow rate	DHW produced in the first 10 minutes in lt/10' input 10 °C output 45 °C, storage at t2 and primary at T1				DHW produced in the first hour in lt/60' input 10 °C output 45 °C, storage at t2 and primary at T1				Heat exchanger pressure drop	
	[m³/h]	T1/t2				T1/t2				[mmH$_2$O]	[mbar]
		55/50	65/60	70/60	80/60	55/50	65/60	70/60	80/60		
250	2,5	22	34	39	51	106	161	189	246	90,0	8,8
	1,25	20	31	36	47	98	147	172	223	26,0	2,5

HEAT EXCHANGERS PRESSURE DROP

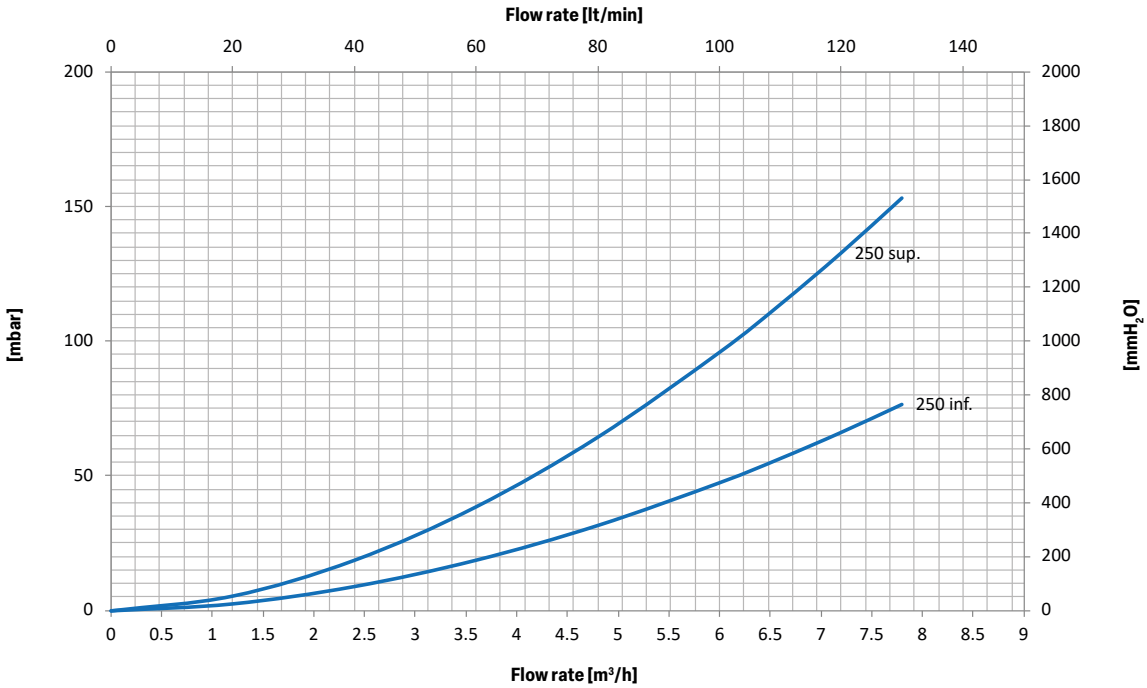

BOLLY® **2 HY DUO SOLAR**

HEAT EXCHANGERS TECHNICAL DATA



BOLLY® 2 HY DUO SOLAR heat exchanger output depending on the temperature and flow rate of the primary circuit and with secondary 10/45 ° C at the maximum withdrawal of DHW. The upper curve that delimits the operating area of each exchanger corresponds to the "MAX" flow rate of the primary indicated in the table; the lower curve corresponds to the "MIN" flow rate.

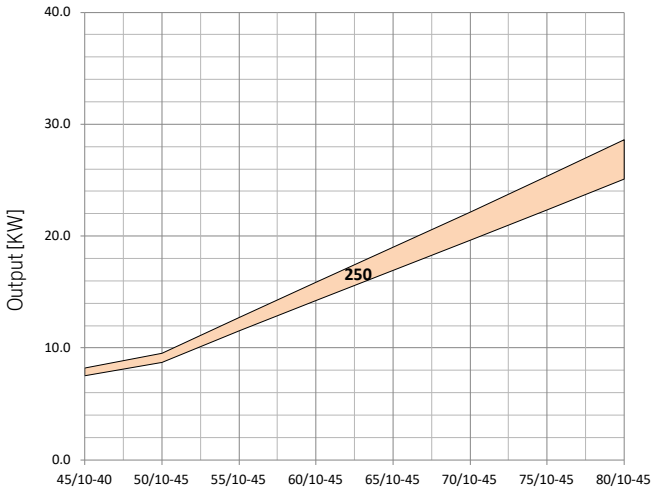

Upper heat exchangers	**250**	
Flow rate [m³/h]	MAX	MIN
	2,5	1,25

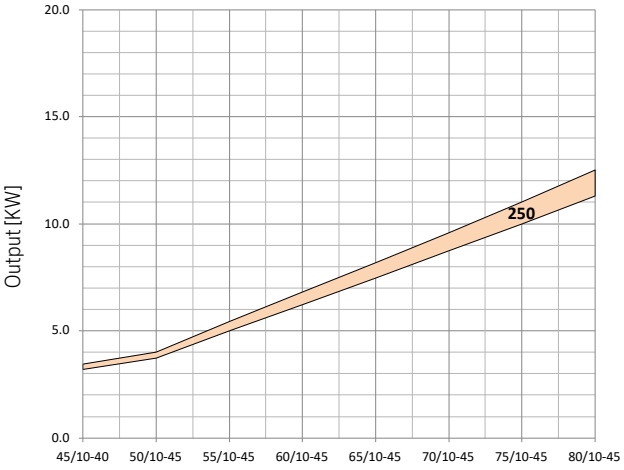

Heat exchanger Lower	**250**	
Flow rate [m³/h]	MAX	MIN
	2,5	1,25

EXAMPLE OF INSTALLATION WITH **BOLLY® 2 HY DUO SOLAR**

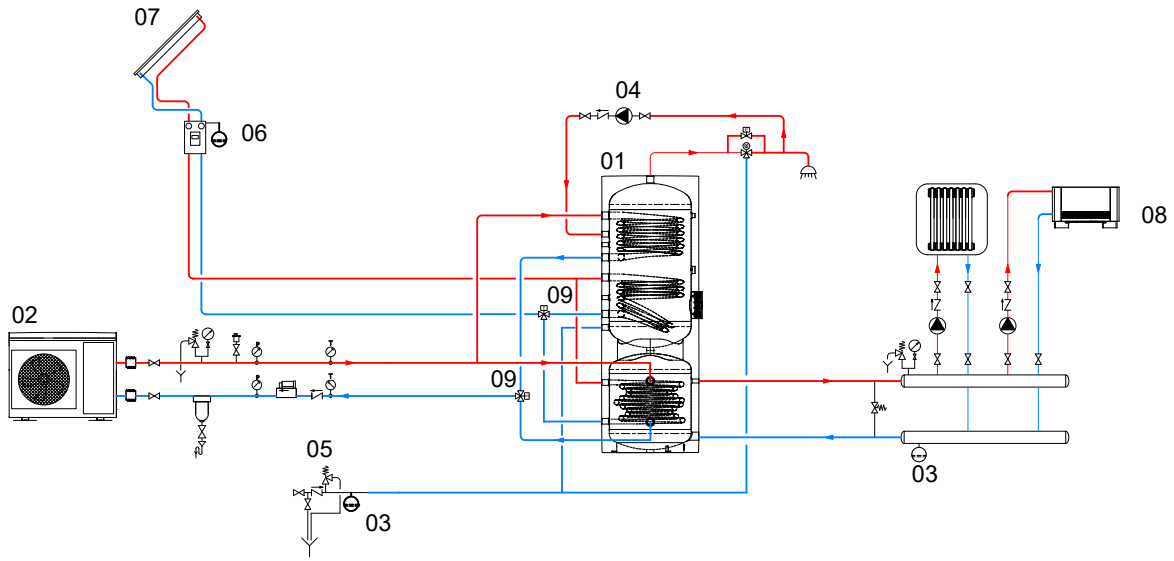

01	Bolly® 2 HY DUO SOLAR	04	D.H.W. recirculation group	07	Solar panels
02	Generator (Heat pump)	05	Hydraulic safety group	08	Heating units
03	Expansion vessel	06	Solar system circulation group	09	Diverter valve

The following schemes are purely illustrative. To realize the installation, always refer to a qualified technician.

BOLLY® 1 PDC

POLYWARM® COATED TANK FOR DHW ACCUMULATION SPECIFIC FOR COMBINATION WITH HEAT PUMP



POLYWARM® COATED DHW STORAGE

BIM MODEL AVAILABLE

ALIGNED

APPLICATION
Production and storage of domestic hot water (DHW).
All the connections are aligned on the front and on the back for quick and easy installation.

MATERIAL
Mild steel Polywarm® coated (Attestation ACS - EN 16421)

EXCHANGE MODULE
Counter-flow heat exchanger system with heat load from the top.

DOUBLE CYCLE EXCHANGE SYSTEM
In Bolly® PDC Double Cycle units, the exclusive patented heat exchange system allows, thanks to the thermostat integrated into the product, the upper part and then the lower part of the tank to be heated in two distinct phases, preserving perfect thermal stratification, ensuring maximum efficiency of the Heat Pump generator, and providing the comfort of rapid domestic hot water availability.

INSULATION
HARD: High thermal insulation with ecological polyurethane hard foam.
HARD FOAM (CLASS "A" MODELS): hard polyurethane foam for high thermal insulation with a vacuum sheet of highly insulating material.
Grey PVC external lining.

CATHODE PROTECTION
Magnesium anode.

DRAIN
External confluence through drain connection

GASKET- FLANGE PLATE
Silicone gaskets suitable for water intended for human consumption (tested according to 98/83/CE); Inspection flange with connection for electric heater.

WARRANTY
5 years (tank). See general sales conditions and warranty for electrical parts.

ACCESSORIES AND SPARE PARTS
See Accessories section for the entire list.

	Model	Art. Nr.	Heat pump max output [kW]	ErP ENERGY EFFICIENCY CLASS
 **BOLLY® 1 PDC WB** HARD FOAM INSULATION	300	3104162330022	15	B
	500	3104162330023	22	C
BOLLY® 1 PDC WB class A HARD FOAM INSULATION	300	3104162330025	15	A
	500	3104162330026	22	A
 **BOLLY® 1 PDC DOUBLE CYCLE WB** HARD FOAM INSULATION	500	3104162330057	30	C
	800	3104162330058	40	B
	1000	3104162330059	40	C

ACCESSORIES

Thermometer

Art. Nr.
5032240000107
5 units box



Electric immersion heater

Art. Nr.	Output [kW]
5240000000052	2



Titanium anode

Art. Nr.	Model
5200000000008	300
5200000000011	500÷1000



ANTILEGIONELLOSIS KIT (Electric immersion heater + Full Control electronic unit)

Art. Nr.	Output [kW]
5221000000112	2



HEAT MANAGER + electric immersion heater 1,5 kW + probe +3m cable

Art. Nr.	Output [kW]
5240000000074	1,5
5240000000075	2
5240000000076	3



Products designed and manufactured for using within temperature and pressure limits in accordance to Art. 4.3 Directive 2014/68/EU (P.E.D.)

BOLLY® 1 PDC

POLYWARM® COATED TANK FOR DHW ACCUMULATION SPECIFIC FOR COMBINATION WITH HEAT PUMP

STORAGE		EXCHANGE MODULE	
Pmax	Tmax	Pmax	Tmax
10 bar	90 °C	10 bar	110 °C

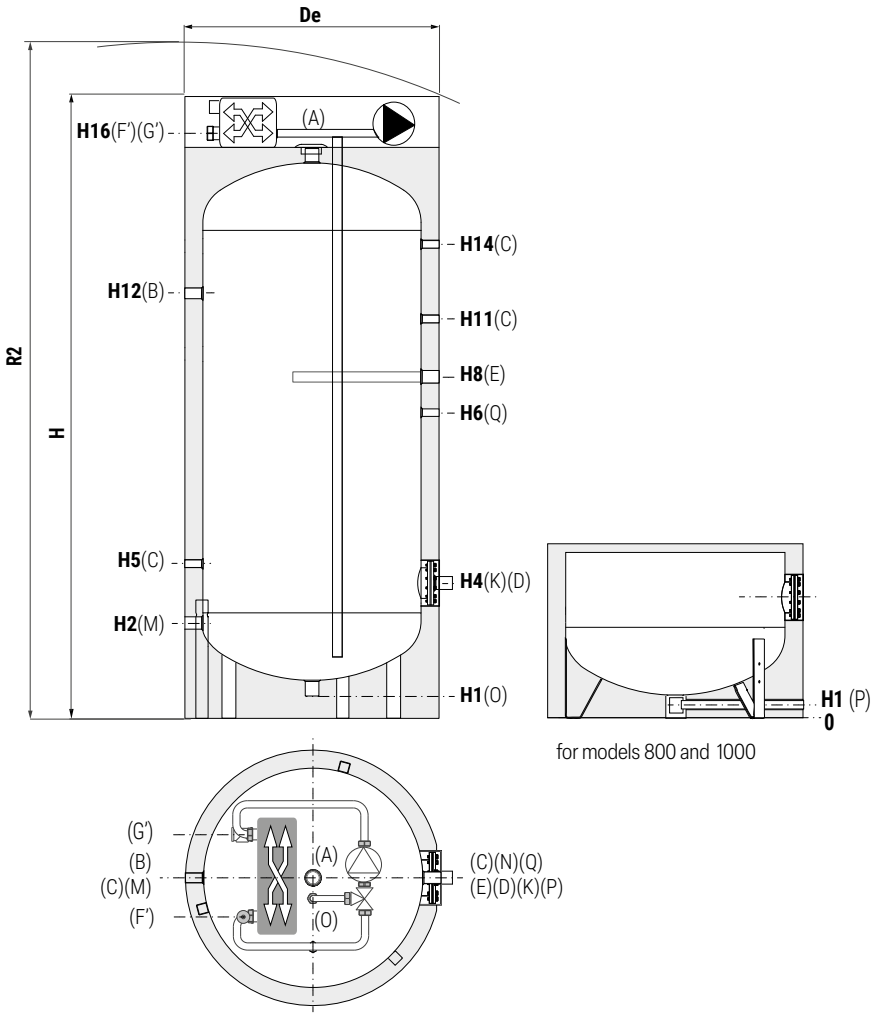

for models 800 and 1000

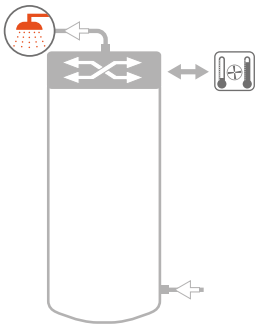

See TECHNICAL SUPPORT chapter for example of installation

A	Domestic hot water outlet G 1"1/4 F
B	Recirculation G 1" F
C	Connection for instrumentation G 1/2" F
D	Connection for electric immersion heater
E	Connection for magnesium anode G 1"1/4 F
F'	Primary circuit inlet
G'	Primary circuit outlet
K	Flange for inspection
M	Domestic water inlet G 1" F
O	Drain
P	Drain > 500 lt
Q	Connection for thermometer G 1/2" F (Only Bolly® PDC DOUBLE CYCLE)

Model	Volume	De	H	R2	H1	H2	H4	H5	H6	H8
	[lt]	[mm]								
300	291	650	1680	1810	70	240	380	430	//	870
500	497	750	2030	2170	70	265	410	465	990	1095
800	789	900	2430	2600	101	340	485	550	1370	1245
1000	1038	1000	2475	2675	89	355	500	560	1435	1310

Model	H11	H12	H14	H16	A	O-P	K	D	F'-G'
	[mm]				Connections F				
300	990	1100	1220	1525	1"1/4	1"1/4	Øi120Øe180	1"1/2	1"
500	1225	1475	1475	1815	1"1/4	1"1/4	Øi120Øe180	1"1/2	1"
800	1510	1600	1710	2200	1"1/4	3/4"	Øi170Øe240	2"	1"
1000	1560	1585	1730	2260	1"1/2	3/4"	Øi170Øe240	2"	1"

Net volume data according to EN 15332 available on product label.

- *-30% reduction of the D.H.W. production time for major comfort*
- *70lt of DHW (45 °C) in only 15 min, with the possibility of heating only the necessary volume of water*
- *More time for the heat pump to be dedicated to heating or cooling*
- *Energy focused where needed: all the energy produced with the heat pump concentrated in the upper part of the tank.*



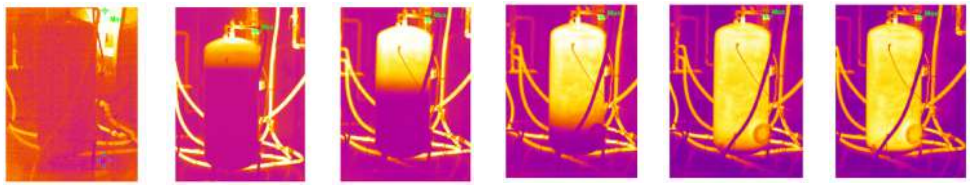

Series of thermographs that illustrate the efficiency of the Cordivari patent through the excellent thermal stratification

Products designed and manufactured for using within temperature and pressure limits in accordance to Art. 4.3 Directive 2014/68/EU (P.E.D.)

BOLLY® 2 PDC

POLYWARM® COATED TANK FOR DHW ACCUMULATION SPECIFIC FOR COMBINATION WITH HEAT PUMP AND WITH 1 FIXED HEAT EXCHANGER FOR INTEGRATION OF 1 HEAT SOURCE



APPLICATION
Production and storage of domestic hot water (DHW).
All the connections are aligned on the front and on the back for quick and easy installation.

MATERIAL
Mild steel Polywarm® coated (Attestation ACS - EN 16421)

EXCHANGE MODULE
Counter-flow heat exchanger system with heat load from the top.

DOUBLE CYCLE EXCHANGE SYSTEM
In Bolly® PDC Double Cycle units, the exclusive patented heat exchange system allows, thanks to the thermostat integrated into the product, the upper part and then the lower part of the tank to be heated in two distinct phases, preserving perfect thermal stratification, ensuring maximum efficiency of the Heat Pump generator, and providing the comfort of rapid domestic hot water availability.

INTEGRATIVE HEAT EXCHANGER
1 Mild steel Polywarm® coated heat exchanger.

INSULATION
HARD: High thermal insulation with ecological polyurethane hard foam.
HARD FOAM (CLASS "A" MODELS): hard polyurethane foam for high thermal insulation with a vacuum sheet of highly insulating material.
Grey PVC external lining.

CATHODE PROTECTION
Magnesium anode.

DRAIN
External confluence through drain connection

GASKET- FLANGE PLATE
Silicone gaskets suitable for water intended for human consumption (tested according to 98/83/CE); Inspection flange with connection for electric heater.

WARRANTY
5 years (tank). See general sales conditions and warranty for electrical parts.

ACCESSORIES AND SPARE PARTS
See Accessories section for the entire list.


POLYWARM® COATED DHW STORAGE



BIM MODEL AVAILABLE


ALIGNED

		Model	Art. Nr.	Heat pump max output [kW]	ErP ENERGY EFFICIENCY CLASS
	**BOLLY® 2 PDC WB** HARD FOAM INSULATION	300	3134162320016	15	B
		500	3134162320017	22	C
	BOLLY® 2 PDC WB Class A HARD FOAM INSULATION	300	3134162320021	15	A
		500	3134162320022	22	A
	**BOLLY® 2 PDC DOUBLE CYCLE WB** HARD FOAM INSULATION	500	3134162320031	30	C
		800	3134162320032	40	B
		1000	3134162320033	40	C

ACCESSORIES

Thermometer

Art. Nr.
5032240000107
5 units box



Electric immersion heater

Art. Nr.	Output [kW]
5240000000052	2



Titanium anode

Art. Nr.	Model
5200000000008	300
5200000000011	500÷1000



ANTILEGIONELLOSIS KIT (Electric immersion heater + Full Control electronic unit)

Art. Nr.	Output [kW]
5221000000112	2



HEAT MANAGER + electric immersion heater 1,5 kW + probe +3m cable

Art. Nr.	Output [kW]
5240000000074	1,5
5240000000075	2
5240000000076	3



Products designed and manufactured for using within temperature and pressure limits in accordance to Art. 4.3 Directive 2014/68/EU (P.E.D.)

BOLLY® **2 PDC**

POLYWARM® COATED TANK FOR DHW ACCUMULATION SPECIFIC FOR COMBINATION WITH HEAT PUMP AND WITH 1 FIXED HEAT EXCHANGER FOR INTEGRATION OF 1 HEAT SOURCE

STORAGE		EXCHANGE MODULE		FIXED HEAT EXCHANGER	
Pmax	Tmax	Pmax	Tmax	Pmax	Tmax
10 bar	90 °C	10 bar	110 °C	12 bar	110 °C

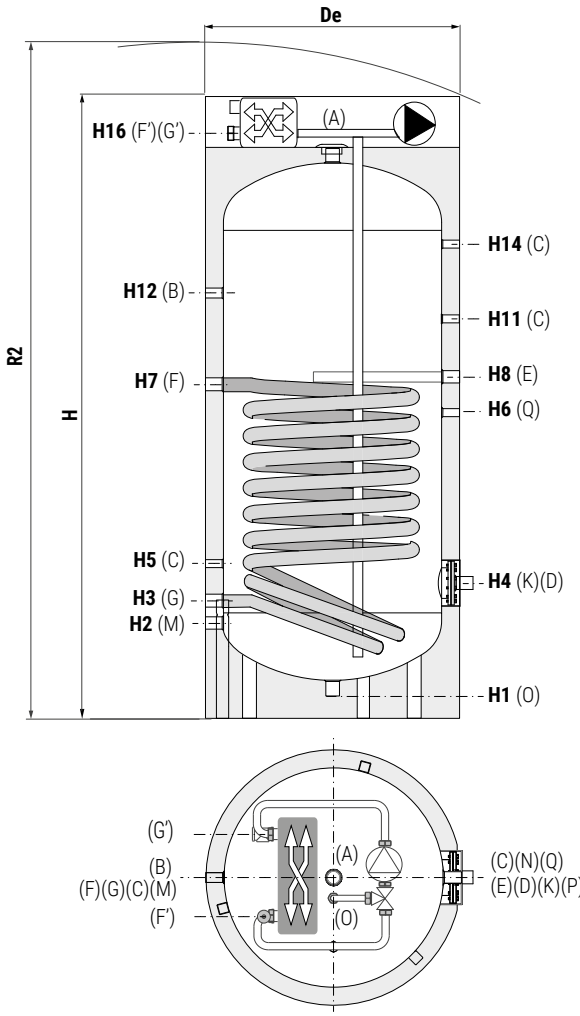

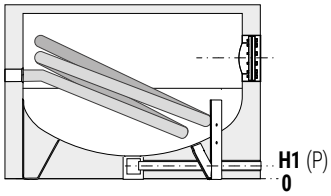

for models 800 and 1000

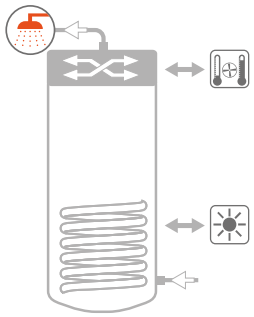

A	Domestic hot water outlet G 1"1/4 F
B	Recirculation G 1" F
C	Connection for instrumentation G 1/2" F
D	Connection for electric immersion heater
E	Connection for magnesium anode G 1"1/4 F
F-F'	Primary circuit inlet
G-G'	Primary circuit outlet
K	Flange for inspection
M	Domestic water inlet G 1" F
O	Drain
P	Drain > 500 lt
Q	Connection for thermometer G 1/2" F (Only Bolly® PDC DOUBLE CYCLE)

Model	Volume	De	H	R2	H1	H2	H3	H4	H5	H6	H7	H8
	[lt]	[mm]										
300	291	650	1680	1810	70	240	310	380	430	//	830	870
500	497	750	2030	2170	70	265	345	410	465	990	1035	1095
800	789	900	2430	2600	101	340	430	485	550	1370	1185	1245
1000	1038	1000	2475	2675	89	355	440	500	560	1435	1280	1310

Model	H11	H12	H14	H16	A	O-P	K	D	F-G	F'-G'
	[mm]				Connections F					
300	990	1100	1220	1525	1"1/4	1"1/4	Øi120Øe180	1"1/2	1"1/4	1"
500	1225	1475	1475	1815	1"1/4	1"1/4	Øi120Øe180	1"1/2	1"1/4	1"
800	1510	1600	1710	2200	1"1/4	3/4"	Øi170Øe240	2"	1"1/4	1"
1000	1560	1585	1730	2260	1"1/2	3/4"	Øi170Øe240	2"	1"1/4	1"

Net volume data according to EN 15332 available on product label.

- ***-30% reduction of the D.H.W. production time for major comfort***
- ***70lt of DHW (45 °C) in only 15 min, with the possibility of heating only the necessary volume of water***
- ***More time for the heat pump to be dedicated to heating or cooling***
- ***Energy focused where needed: all the energy produced with the heat pump concentrated in the upper part of the tank.***



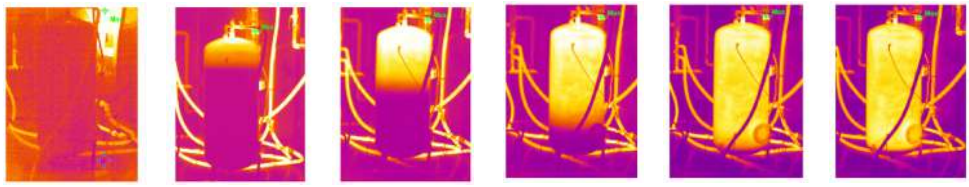

Series of thermographs that illustrate the efficiency of the Cordivari patent through the excellent thermal stratification

Products designed and manufactured for using within temperature and pressure limits in accordance to Art. 4.3 Directive 2014/68/EU (P.E.D.)

BOLLY® 3 PDC

POLYWARM® COATED TANK FOR DHW ACCUMULATION SPECIFIC FOR COMBINATION WITH HEAT PUMP AND WITH 2 FIXED HEAT EXCHANGERS FOR INTEGRATION OF 2 HEAT SOURCES



APPLICATION
Production and storage of domestic hot water (DHW).
All the connections are aligned on the front and on the back for quick and easy installation.

MATERIAL
Mild steel Polywarm® coated (Attestation ACS - EN 16421)

EXCHANGE MODULE
Counter-flow heat exchanger system with heat load from the top.

DOUBLE CYCLE EXCHANGE SYSTEM
In Bolly® PDC Double Cycle units, the exclusive patented heat exchange system allows, thanks to the thermostat integrated into the product, the upper part and then the lower part of the tank to be heated in two distinct phases, preserving perfect thermal stratification, ensuring maximum efficiency of the Heat Pump generator, and providing the comfort of rapid domestic hot water availability.

INTEGRATIVE HEAT EXCHANGER
Nr. 2 Mild steel Polywarm® coated heat exchangers.

INSULATION
HARD: High thermal insulation with ecological polyurethane hard foam.
HARD FOAM (CLASS "A" MODELS): hard polyurethane foam for high thermal insulation with a vacuum sheet of highly insulating material.
Grey PVC external lining.

CATHODE PROTECTION
Magnesium anode.

DRAIN
External confluence through drain connection

GASKET- FLANGE PLATE
Silicone gaskets suitable for water intended for human consumption (tested according to 98/83/CE); Inspection flange with connection for electric heater.

WARRANTY
5 years (tank). See general sales conditions and warranty for electrical parts.

ACCESSORIES AND SPARE PARTS
See Accessories section for the entire list.


POLYWARM® COATED DHW STORAGE



BIM MODEL AVAILABLE


ALIGNED

		Model	Art. Nr.	Heat pump max output [kW]	ErP ENERGY EFFICIENCY CLASS
	**BOLLY® 3 PDC WB** HARD FOAM INSULATION	300	3134162320019	15	B
		500	3134162320020	22	C
	BOLLY® 3 PDC WB (class A) HARD FOAM INSULATION	300	3134162320023	15	A
		500	3134162320024	22	A
	**BOLLY® 3 PDC DOUBLE CYCLE WB** HARD FOAM INSULATION	500	3134162320034	30	C
		800	3134162320035	40	B
		1000	3134162320036	40	C

ACCESSORIES

Thermometer

Art. Nr.
5032240000107
5 units box



Electric immersion heater

Art. Nr.	Output [kW]
5240000000052	2



Titanium anode

Art. Nr.	Model
5200000000008	300
5200000000011	500÷1000



ANTILEGIONELLOSIS KIT (Electric immersion heater + Full Control electronic unit)

Art. Nr.		Output [kW]
5221000000112		2



HEAT MANAGER + electric immersion heater 1,5 kW + probe +3m cable

Art. Nr.	Output [kW]
5240000000074	1,5
5240000000075	2
5240000000076	3



Products designed and manufactured for using within temperature and pressure limits in accordance to Art. 4.3 Directive 2014/68/EU (P.E.D.)

BOLLY® **3 PDC**

POLYWARM® COATED TANK FOR DHW ACCUMULATION SPECIFIC FOR COMBINATION WITH HEAT PUMP AND WITH 2 FIXED HEAT EXCHANGERS FOR INTEGRATION OF 2 HEAT SOURCES

STORAGE		EXCHANGE MODULE		FIXED HEAT EXCHANGER	
Pmax	Tmax	Pmax	Tmax	Pmax	Tmax
10 bar	90 °C	10 bar	110 °C	12 bar	110 °C

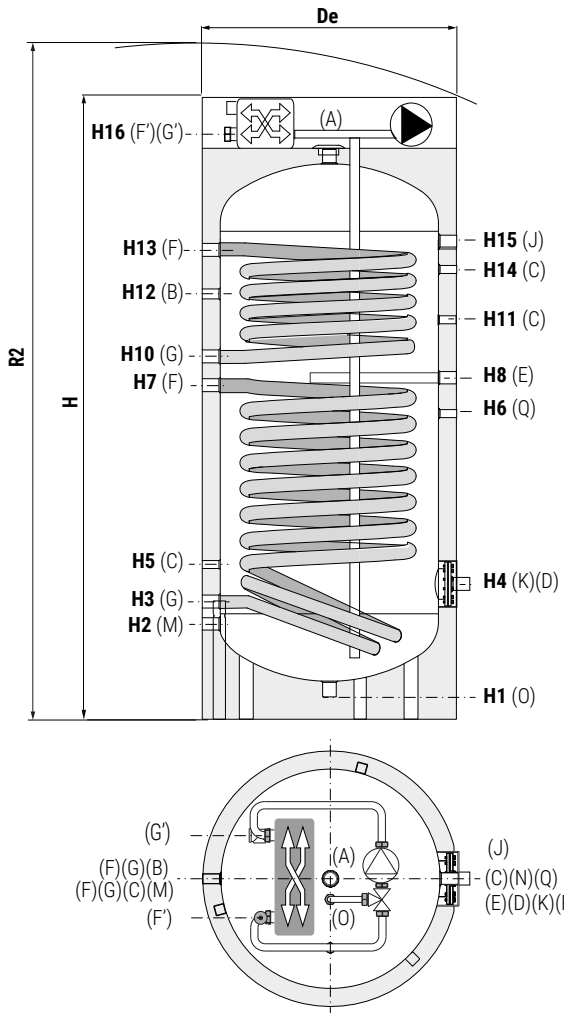

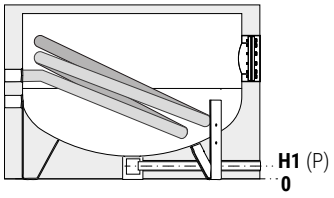

for models 800 and 1000

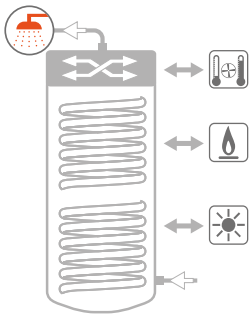

See TECHNICAL SUPPORT chapter for example of installation

A	Domestic hot water outlet
B	Recirculation G 1" F
C	Connection for instrumentation G 1/2" F
D	Connection for electric immersion heater
E	Connection for magnesium anode. G 1"1/4 F
F-F'	Primary circuit inlet
G-G'	Primary circuit outlet
K	Flange for inspection
M	Domestic water inlet G 1" F
J	Connection for magnesium anode G 1"1/4 F > only for models 500 litri
O	Drain
P	Drain > 500 lt
Q	Connection for thermometer G 1/2" F (Only Bolly® PDC DOUBLE CYCLE)

Model	Volume	De	H	R2	H1	H2	H3	H4	H5	H6	H7	H8	H10
	[lt]	[mm]											
300	291	650	1680	1810	70	240	310	380	430	//	830	870	980
500	497	750	2030	2170	70	265	345	410	465	990	1035	1095	1185
800	789	900	2430	2600	101	340	430	485	550	1370	1185	1245	1365
1000	1038	1000	2475	2675	89	355	440	500	560	1435	1280	1310	1400

Model	H11	H12	H13	H14	H15	H16	A	O-P	K	D	F-G	F'-G'
	[mm]						Connections F					
300	990	1100	1220	1220	//	1525	1"1/4	1"1/4	Øi120Øe180	1"1/2	1"1/4	1"
500	1225	1475	1475	1475	//	1815	1"1/4	1"1/4	Øi120Øe180	1"1/2	1"1/4	1"
800	1510	1600	1770	1710	1820	2200	1"1/4	3/4"	Øi170Øe240	2"	1"1/4	1"
1000	1560	1585	1820	1730	1840	2260	1"1/2	3/4"	Øi170Øe240	2"	1"1/4	1"

Net volume data according to EN 15332 available on product label.

- ***-30% reduction of the D.H.W. production time for major comfort***
- ***70lt of DHW (45 °C) in only 15 min, with the possibility of heating only the necessary volume of water***
- ***More time for the heat pump to be dedicated to heating or cooling***
- ***Energy focused where needed: all the energy produced with the heat pump concentrated in the upper part of the tank.***



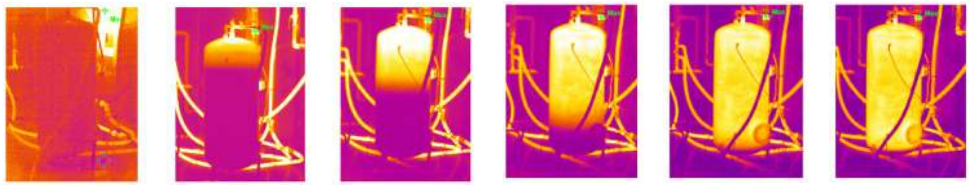

Series of thermographs that illustrate the efficiency of the Cordivari patent through the excellent thermal stratification

Products designed and manufactured for using within temperature and pressure limits in accordance to Art. 4.3 Directive 2014/68/EU (P.E.D.)

BOLLY® **PDC**

TECHNICAL DATA AND EXAMPLE OF INSTALLATION



Bolly® PDC is the result of a continuous research aimed to develop a unique calorifier in its field. It is in fact the only patented system of thermal exchange actually on the market, specifically conceived for installation with heat pumps.

The exchange and stratification system is conceived to self-balance: only part of the heated water, proportionate to the temperature achieved during the thermal exchange, is pushed in the tank from the top. This way the water added in the upper part is at maximum desired temperature while fresh water coming from the lower part of the tank goes to the exchanger.

This leads to many advantages such as the increased efficiency of the heat pump C.o.p, the achievement of a perfect thermal stratification, that allows to profit immediately of the hot water. This also allows to heat only part of the tank reducing energy waste.

The innovative Bolly® PDC, combined with a heat pump, thanks to the new patented exchange group is able to guarantee 30 % higher performances compared to a generic, traditional calorifier in terms of ignition time and thermal exchange efficiency.

Laboratory tests and researches conducted on the stratification process confirm that the use of Bolly® PDC in a heat pump installation means an increased comfort and about a 15% reduction of electric consumption while extending the generator lifecycle, reducing its on/off.

PATENTED HEAT-EXCHANGE MODULE

Bolly® PDC (model 500), connected to 12kW heat pump

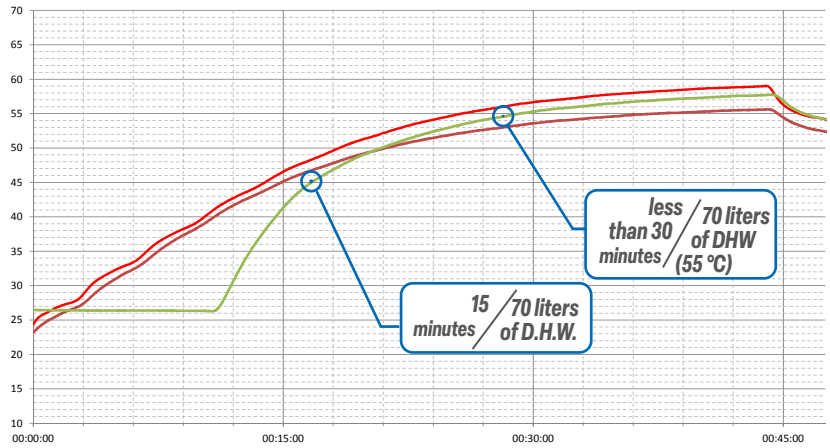

-30% ignition time and consequent better efficiency of HP in heating/cooling phase.

70 L. of DHW at 55 °C in just 30 minutes, with possibility to heat only the necessary required water volume.

Optimizing the time necessary for the HP for heating and cooling the room.

The energy produced by Heat pump is concentrated in the Domestic hot water in the upper part of the storage volume

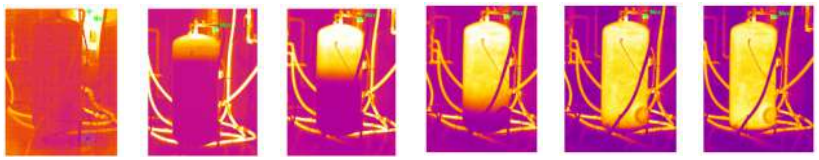

BOLLY® PDC
Upper loading and improved thermal stratification thanks to the patented heat exchanger group.

TECHNICAL DATA AND EXAMPLE OF INSTALLATION

The peculiarity of the Bolly® PDC heat exchange module consists in the possibility of loading the thermal power in the DHW storage from above, in order to prepare hot water for the user at the right temperature after few minutes of operation. Obviously, the quantity of DHW available will depend on the actual time of operation, the initial temperature of the sanitary cold water, and the thermal output of the generator.

The typical operating condition of an hydronic heat pump generator is to provides 55 °C at the primary inlet with 5 °C deltaT on the return side. The presence of a thermostatic mixer on the domestic circuit allows the appliance to adjust the performance and the efficiency in the heating phase. With the mixer at minimum (in practice with the mixer excluded) the maximum performance is obtained in terms of exchangeable output at the beginning of the heating process (values shown in the catalog). But under these conditions, as the temperature rises on the secondary side the exchanged output will go down.

Much more interesting is to examine the behavior of the exchange module with the mixer in position "2" which corresponds to primary at 55 °C and production of DHW at 50 °C, with the peculiarity that this value of 50 °C is independent from the temperature of the cold water.

Under these conditions the exchanged output remains constant for all the time necessary to heat the storage volume and, independently of the initial storage temperature.

Summing up:

- **PRIMARY INLET= 55 °C**
- **MIXER POSITION = 2**
- **DHW INLET TEMPERATURE INTO THE STORAGE FROM EXCHANGE MODULE = 50 °C**
- **BOLLY® PDC 300 EXCHANGEABLE OUTPUT = 15 KW**
- **BOLLY® PDC 500 EXCHANGEABLE OUTPUT = 22 KW**
- **BOLLY® PDC 800 EXCHANGEABLE OUTPUT = 26 KW**
- **ΔT AT PRIMARY = 5 °C (RETURN TO GENERATOR 50 °C)**

Under these conditions the producibility of DHW (and therefore the storage heating time) will depend on the initial storage temperature corresponding to the water inlet temperature.

Bolly® PDC

Model	Primary circuit inlet temperature T1 [°C]	Mixer position	Output [kW]	Initial storage temperature 10°C		Initial storage temperature 20°C		Initial storage temperature 25°C	
				DHW production at 50°C [lt/min]	Storage heating time[min]	DHW production at 50°C [lt/min]	Storage heating time[min]	DHW production at 50°C [lt/min]	Storage heating time[min]
300	55	2	15	5,1	57	6,8	43	8,2	36
500			22	6,8	73	9,1	55	10,9	46
800			26	8,8	89	11,8	67	14,2	56

Bolly® PDC DOUBLE CYCLE

Model	Primary circuit inlet temperature T1 [°C]	ΔT (secondary circuit)	Output [kW]	Initial storage temperature 10°C		Initial storage temperature 20°C		Initial storage temperature 25°C	
				Max DHW production at ΔT (secondary circuit) [lt/min]	Storage heating time at 50°C [min]	Max DHW production at ΔT (secondary circuit) [lt/min]	Storage heating time at 50°C [min]	Max DHW production at ΔT (secondary circuit) [lt/min]	Storage heating time at 50°C [min]
500	55	8,6	25	42	55	42	41	42	34
800		9,5	30	42	79	42	59	42	49
1000				42	104	42	78	42	65

BOLLY® **PDC DOUBLE CYCLE**

DOUBLE CYCLE EXCHANGE SYSTEM

Cordivari patented Bolly PDC is a range of tanks specifically optimized for heat pumps.

These tanks can integrate up to 3 different energy sources and guarantee approx. +30% performance compared to tank- in-tank or traditional ones and savings of 15% on electricity consumption of the heat pumps, thanks to the patented stratified exchange system.
This unique range is now extended with the DOUBLE CYCLE patented solutions, aimed to optimize the performance also for medium and large sized systems:
Heat exchange takes place in two separate phases:
CYCLE ONE heats only the upper part of the tank to allow an initial and very rapid availability of DHW at comfort temperature;
CYCLE TWO which, after cycle one has ended, heats separately the lower part of the tank avoiding any turbulence in the upper part. This completes the heating of the entire cylinder, achieving the best balance between thermal comfort of the building and DHW, improving savings and energy efficiency.

CYCLE ONE
Only heating of the higher part of the cylinder (V1). No heat exchange in the bottom part (V2).

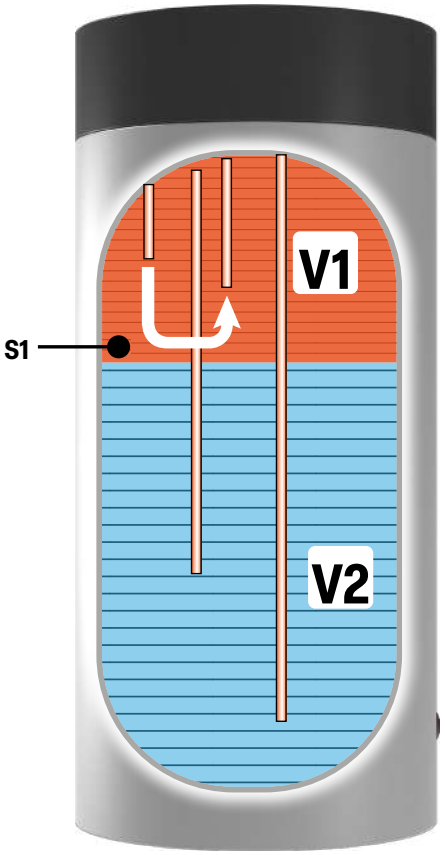

CYCLE TWO
Perfect thermal stratification: heating of the bottom part of the cylinder (V2). No mixing in the higher part (V1).

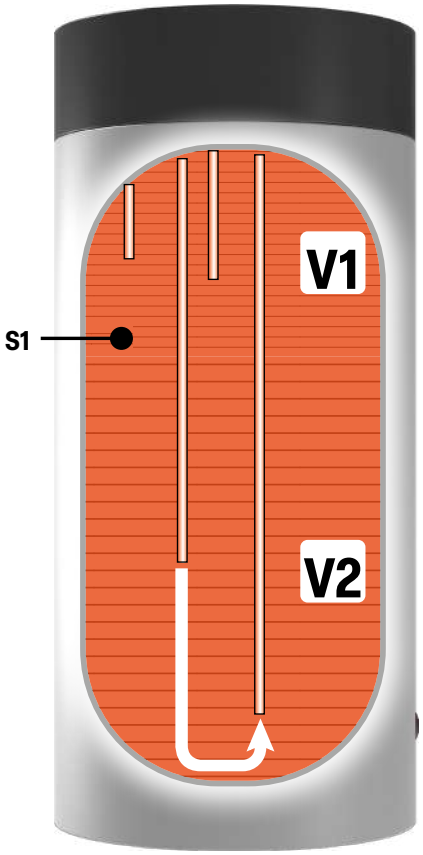

THERMOGRAPHY
The below thermography show the perfect stratification in the two phases of the heat exchange.

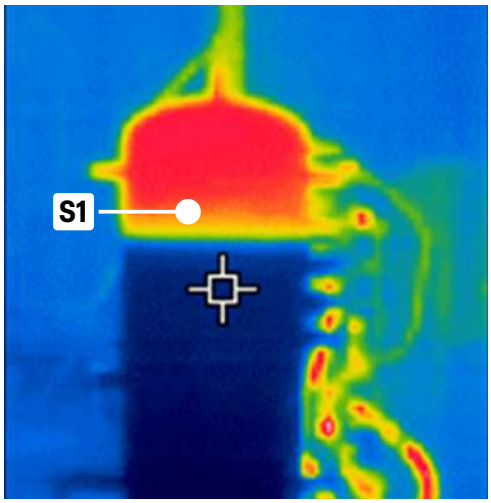



BOLLY® **MURALE**

HANGED POLYWARM® COATED CALORIFIER FOR D.H.W. PRODUCTION WITH 1 FIXED HEAT EXCHANGER



POLYWARM® COATED DHW STORAGE

POLYWARM® COATED HEAT EXCHANGER

PROMPT AVAILABILITY

APPLICATION
Production and storage of domestic hot water (DHW).
MATERIAL
Mild steel Polywarm® coated (Attestation ACS - EN 16421).
Complete with wall brackets.
HEAT EXCHANGER
1 Mild steel Polywarm® coated heat exchanger.
INSULATION
High thermal insulation with ecological polyurethane hard foam.
Grey PVC external lining.

CATHODE PROTECTION
Magnesium anode.
DRAIN
External confluence through drain connection.
WARRANTY
5 years (See general sales conditions and warranty)
ACCESSORIES AND SPARE PARTS
See Accessories section for the entire list.





BOLLY® MURALE WB
HARD FOAM INSULATION + PVC

Model	Art. Nr.	Heat exchangers surface [m²]	ErP ENERGY EFFICIENCY CLASS
80	3104160900031	0,44	B
100	3104160900032	0,44	C
150	3104160900033	0,63	C
200	3104160900034	0,84	C
300	3104160900035	1,22	C

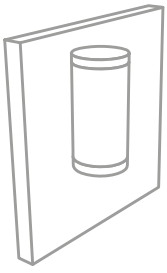

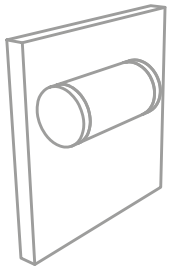

Vertical or horizontal wall hanged

Model	Output	Ignition time	Production of D.H.W.
	Data have been calculated with primary water at 85 °C - DHW production from 10°C to 45°C, and storage at 60 °C		
	[kW]	[min]	[lt/h]	[lt/10']
80	14	26	345	171
100	14	32	345	200
150	21	33	508	298
200	29	32	704	403
300	42	34	1027	599

ACCESSORIES

FULL CONTROL electronic unit (mounted on tank)

Art. Nr.	for models
5220280000005	WB



Thermometer

Art. Nr.
5032240000107
5 units box



Magnesium anode

Art. Nr.	Model
7200000041015	80÷150
7200000041010	200÷300
2 units box	



Electric immersion heater with thermostat

Art. Nr.	Output	Connection
5240000000086	1,5 kW	1"1/2
5240000000087	2 kW	1"1/2
5240000000088	3 kW	1"1/2

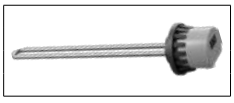

HEAT MANAGER + electric immersion heater 1,5 kW + probe +3m cable

Art. Nr.	Output [kW]
5240000000074	1,5
5240000000075	2
5240000000076	3



Products designed and manufactured for using within temperature and pressure limits in accordance to Art. 4.3 Directive 2014/68/EU (P.E.D.)

BOLLY® **MURALE**

HANGED POLYWARM® COATED CALORIFIER FOR D.H.W. PRODUCTION WITH 1 FIXED HEAT EXCHANGER

STORAGE		HEAT EXCHANGER	
Pmax	Tmax	Pmax	Tmax
10 bar	90 °C	12 bar	110 °C

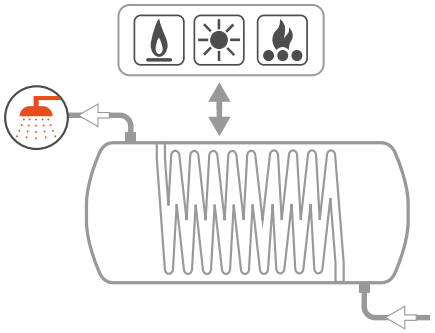

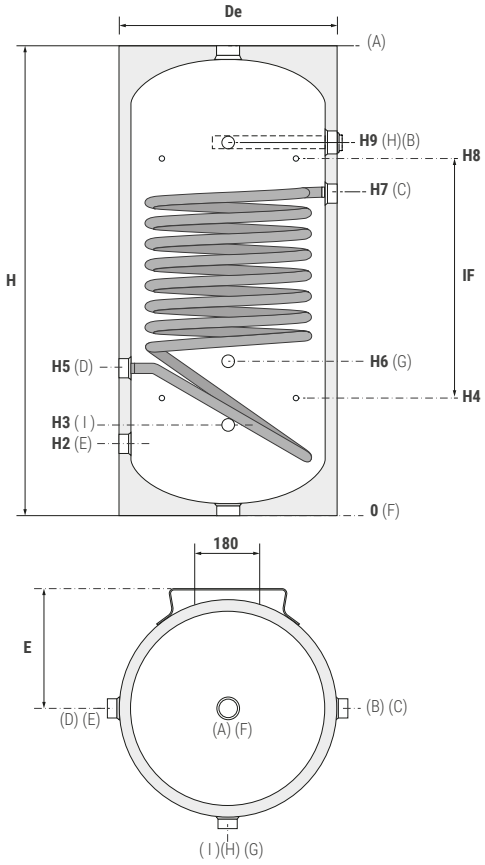

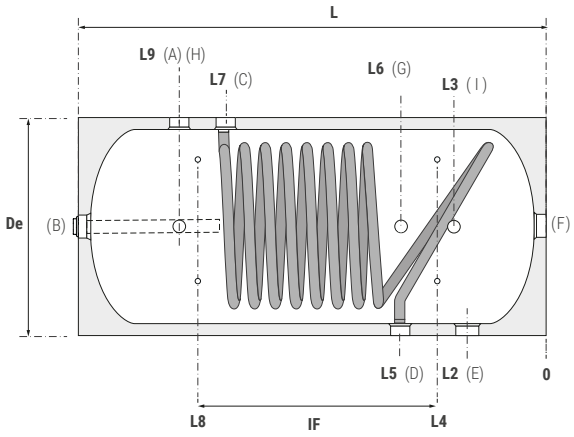

A	Domestic hot water outlet G 1"1/4
B	Magnesium anode G 1"1/4 F
C	Primary circuit inlet G 1"1/4 F
D	Primary circuit outlet G 1"1/4 F
E	Domestic cold water circuit inlet G 1"1/4 F
F	Connection G 1"1/4 F
G	Instrumentation G 1/2" F
H	Instrumentation G 1/2" F
I	Connection for electric immersion heater G 1"1/2 F

Model	Volume	Weight	De	H/L	H2/L2	H3/L3	H4/L4	H5/L5	H6/L6	H7/L7	H8/L8	H9/L9	IF	E
	[lt]	[Kg]	[mm]											
80	84	25	456	800	195	205	218	290	330	510	583	605	220	250
100	103	29	456	954	205	215	223	300	340	655	733	750	510	250
150	149	40	456	1330	205	215	330	300	340	1030	1000	1125	570	250
200	191	47	510	1350	215	225	318	310	350	1040	1033	1135	730	275
300	293	62	610	1400	240	250	343	335	375	1065	1058	1160	730	325

Net volume data according to EN 15332 available on product label.

Products designed and manufactured for using within temperature and pressure limits in accordance to Art. 4.3 Directive 2014/68/EU (P.E.D.)

BOLLY® **PRIMO**

POLYWARM® COATED CALORIFIER FOR D.H.W. PRODUCTION
WITH 1 FIXED HEAT EXCHANGER FOR WALL OR FLOOR STANDING INSTALLATION




POLYWARM® COATED DHW STORAGE


POLYWARM® COATED HEAT EXCHANGER

APPLICATION
Production and storage of domestic hot water (DHW).
MATERIAL
Mild steel Polywarm® coated (Attestation ACS - EN 16421)
HEAT EXCHANGER
Mild steel Polywarm® coated heat exchanger.
INSULATION
High thermal insulation with ecological polyurethane hard foam.
Grey PVC external lining.
CATHODE PROTECTION
Magnesium anode.

DRAIN
External confluence through drain connection (vertical version).
WARRANTY
2 years (See general sales conditions and warranty)
ACCESSORIES AND SPARE PARTS
See Accessories section for the entire list.



BOLLY® PRIMO WB
HARD FOAM INSULATION

	Model	Art. Nr.	Heat exchangers surface [m²]	ErP ENERGY EFFICIENCY CLASS
	100	3104160900056	0,44	**B**
Quantities (6pcs)	**100**	310416090005606	0,44	**B**
Quantities (6pcs)	**150**	310416090005706	0,63	**B**
Quantities (4pcs)	**200**	310416090005804	0,84	**B**
Quantities (4pcs)	**300**	310416090005904	1,22	**B**

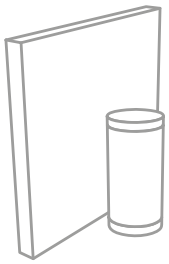
Standard installation floor standing

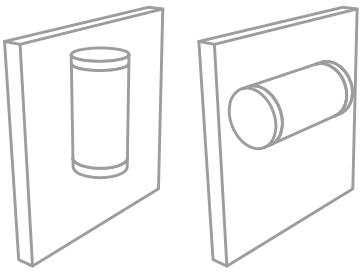
With the wall mounting kit (optional) it is possible to install the tank vertically or horizontally

ACCESSORIES

Wall fixing kit

Art. Nr.	Model
5221000000069	100
5221000000070	150
5221000000071	200
5221000000072	300
Galvanized brackets +PVC bottom cover	

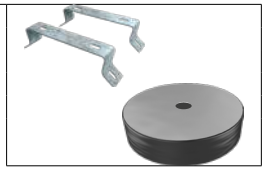

Electric immersion heater with thermostat

Art. Nr.	Output	Connection
5240000000086	1,5 kW	1"1/2
5240000000087	2 kW	1"1/2
5240000000088	3 kW	1"1/2

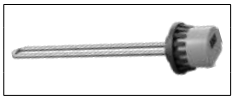

Thermometer

Art. Nr.
5032240000107
5 units box



Magnesium anode

Art. Nr.	Model
7200000041015	80÷150
7200000041010	200÷300
2 units box	



Products designed and manufactured for using within temperature and pressure limits in accordance to Art. 4.3 Directive 2014/68/EU (P.E.D.)

BOLLY® **PRIMO**

POLYWARM® COATED CALORIFIER FOR D.H.W. PRODUCTION WITH 1 FIXED HEAT EXCHANGER FOR WALL OR FLOOR STANDING INSTALLATION

STORAGE		HEAT EXCHANGER	
Pmax	Tmax	Pmax	Tmax
10 bar	90 °C	12 bar	110 °C

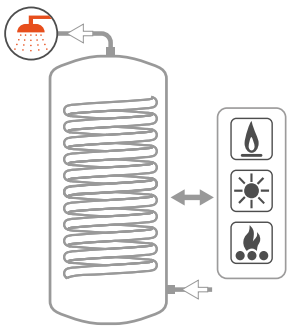

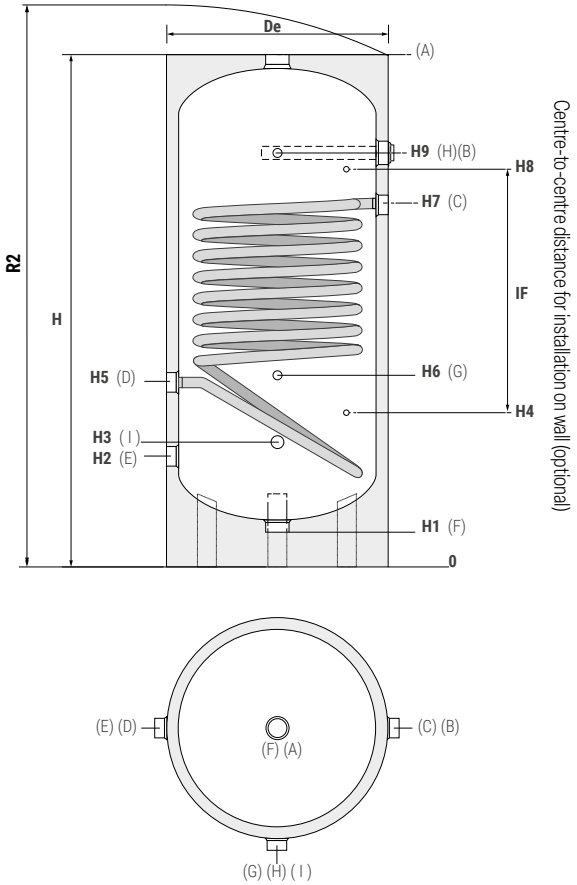

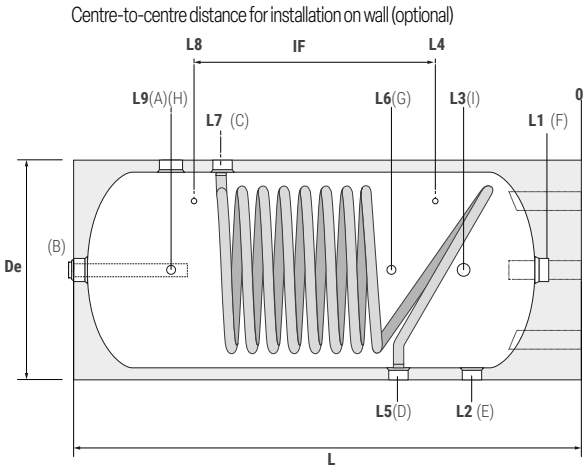

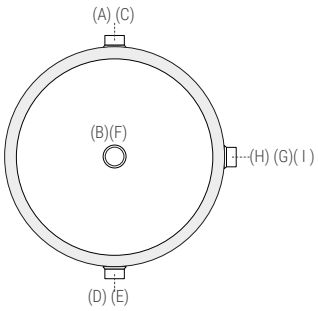

A	Domestic hot water outlet G 1"1/4 F
B	Magnesium anode G 1"1/4 F
C	Primary circuit inlet G 1" F
D	Primary circuit outlet G 1" F
E	Domestic cold water circuit inlet G 1"1/4 F
F	Connection G 1"1/4 F
G	Instrumentation G 1/2" F
H	Instrumentation G 1/2" F
I	Connection for electric immersion heater G 1"1/2 F

Model	Volume	Weight	De	R1	H/L	H1/L1	H2/L2	H3/L3	H4/L4	H5/L5	H6/L6	H7/L7	H8/L8	H9/L9	IF
	[lt]	[kg]	[mm]												
100	103	29	456	1130	1025	72	276	286	294	371	411	726	804	821	510
150	149	40	456	1410	1330	72	276	286	401	371	411	1101	1071	1196	570
200	191	47	510	1450	1350	69	283	293	386	378	418	1108	1101	1203	730
300	293	62	610	1535	1400	70	310	320	413	405	445	1135	1128	1230	730

Net volume data according to EN 15332 available on product label.

Products designed and manufactured for using within temperature and pressure limits in accordance to Art. 4.3 Directive 2014/68/EU (P.E.D.)

BOLLY® **MURALE** - BOLLY® **PRIMO**

HEAT EXCHANGERS TECHNICAL DATA



Data have been calculated on following basis:
1) Primary circuit at T1 and proper energy source;
2) Production of DHW in continuous from 10 °C to t2;
3) DHW that can be taken in the first 10' and in the first hour from storage at t2, input 10 °C and output 45 °C;
4) Non-scaling sanitary water

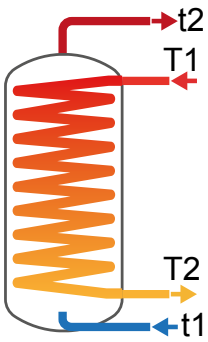

Model	Primary flow rate	Ignition time (minutes) from 10 °C to t2 and primary at T1				Maximum power exchange (kW) with primary at T1, secondary within 10-45 °C and constant use of DHW production				DHW continuous production lt/h within 10-45 °C and primary at T1HW production			
	[m³/h]	T1/t2				T1				T1			
		55/50	65/60	70/60	80/60	55	65	70	80	55	65	70	80
80	2	80	85	55	35	4,9	7,3	8,6	11,2	114	175	207	270
	1	90	96	61	39	4,5	6,7	7,9	10,2	105	160	188	245
100	2	99	105	68	43	4,9	7,3	8,6	11,2	114	175	207	270
	1	111	119	76	48	4,5	6,7	7,9	10,2	105	160	188	245
150	2	105	111	74	47	6,5	9,7	11,3	14,7	154	234	275	358
	1	119	126	84	54	6	8,8	10,3	13,2	141	218	248	322
200	2,5	91	95	65	42	9,2	13,8	16,2	21	223	337	395	513
	1,25	102	108	73	48	8,6	12,7	14,7	19	206	308	359	464
300	3	98	102	70	46	13,1	19,6	22,9	29,6	318	479	561	727
	1,5	110	115	80	52	12,2	17,9	20,8	26,7	296	438	510	656

Model	Primary flow rate	DHW produced in the first 10 minutes in lt/10' input 10 °C output 45 °C, storage at t2 and primary at T1				DHW produced in the first hour in lt/60' input 10 °C output 45 °C, storage at t2 and primary at T1				Heat exchanger pressure drop	
	[m³/h]	T1/t2				T1/t2				[mmH$_2$O]	[mbar]
		55/50	65/60	70/60	80/60	55/50	65/60	70/60	80/60		
80	2	110	143	149	159	183	254	280	330	175	17
	1	109	141	146	155	175	242	265	310	51	5
100	2	133	172	177	188	205	283	308	359	175	17
	1	132	170	174	184	198	271	293	339	51	5
150	2	191	246	253	267	289	394	427	494	229	22
	1	189	243	248	261	279	382	406	465	67	7
200	2,5	249	320	330	350	390	534	580	675	472	46
	1,25	246	316	324	342	376	511	551	635	139	14
300	3	379	487	501	528	580	790	856	989	908	89
	1,5	375	480	492	516	563	758	815	932	268	26

HEAT EXCHANGERS PRESSURE DROP

Heat exchangers surface [m²]	
80	0,44
100	0,44
150	0,63
200	0,84
300	1,22

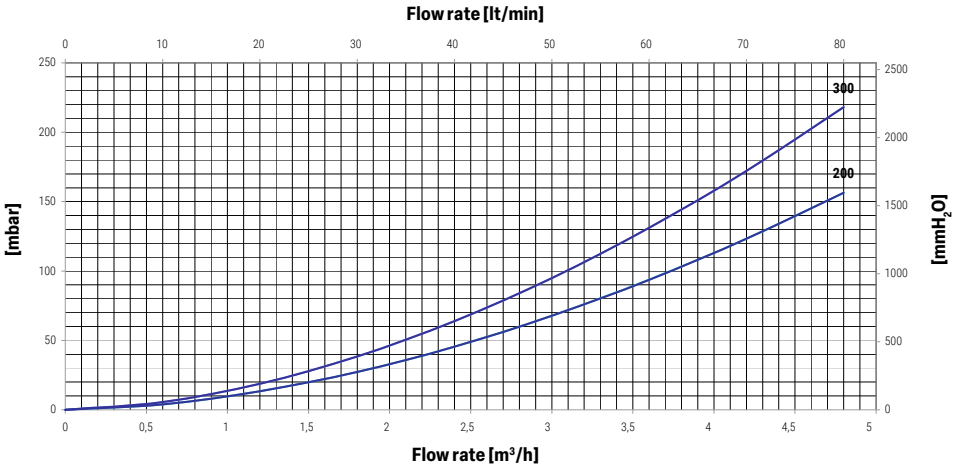

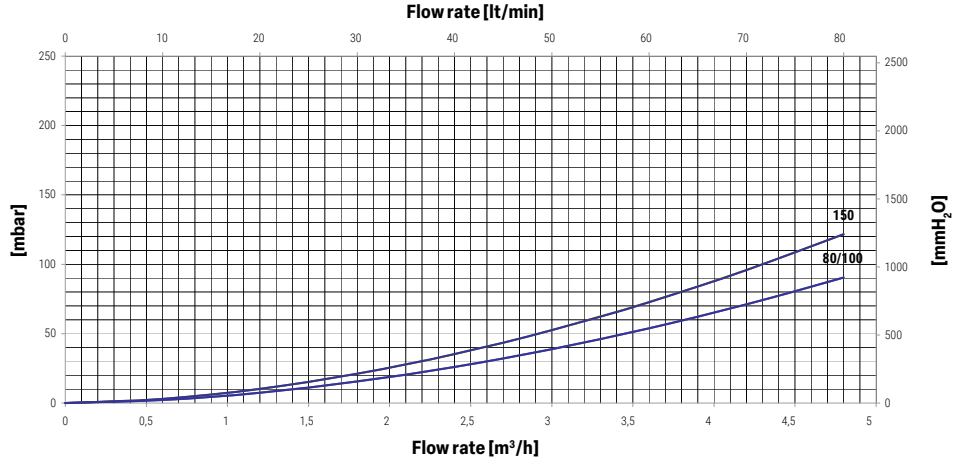

BOLLY® **MURALE** - BOLLY® **PRIMO**

HEAT EXCHANGERS TECHNICAL DATA



Heat Exchanger output referred to temperature and flow rate of primary circuit and with secondary at 10/45°C at maximum withdrawal of producible DHW (Upper limit of the curves referred to maximum primary flow rate in the heat exchanger, while the lower limit in the curves refer to the minimum primary flow rate)

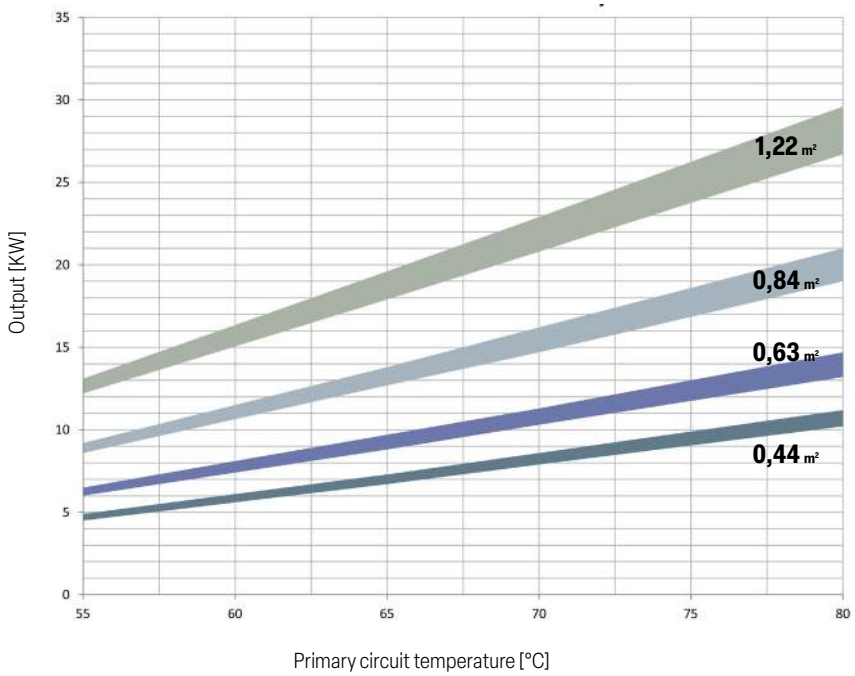

Heat exchanger [m²]	0,44		0,63		0,84		1,22	
Flow rate [m³/h]	MAX	MIN	MAX	MIN	MAX	MIN	MAX	MIN
	2	1	2	1	2,5	1,25	3	1,5

EXAMPLE OF INSTALLATION WITH **BOLLY® MURALE / BOLLY® PRIMO**

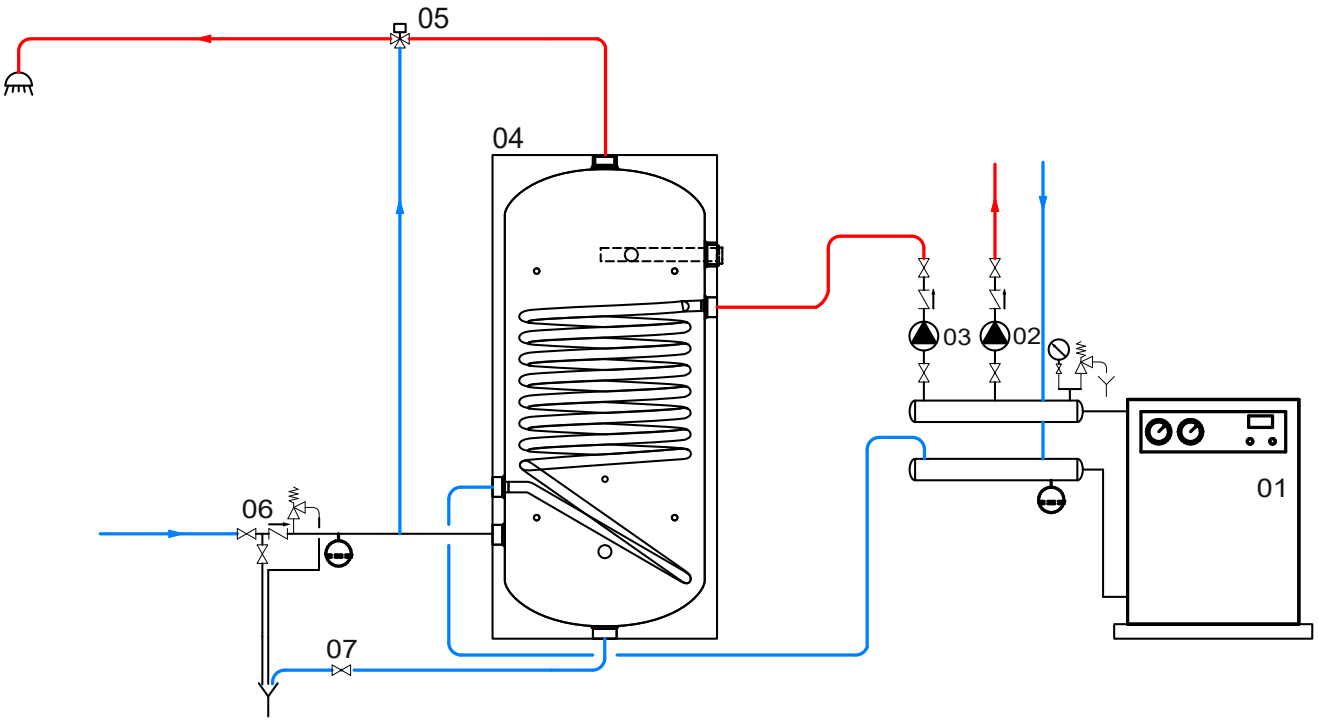

01	Generator	03	D.H.W. circulation group	05	Thermostatic mixing valve	07	Blowdown valve
02	Heating system circulation group	04	BOLLY® MURALE / PRIMO	06	Hydraulic safety group		

The following schemes are purely illustrative. To realize the installation, always refer to a qualified technician.

INTERKA

POLYWARM® COATED DOUBLE WALLED CALORIFIER FOR D.H.W. PRODUCTION



APPLICATION
Production and storage of domestic hot water (DHW).
MATERIAL
Mild steel Polywarm® coated (Attestation ACS - EN 16421).
HEAT EXCHANGER
Double wall heat exchanger.

INSULATION
High thermal insulation with ecological polyurethane hard foam.
Grey PVC external lining.
CATHODE PROTECTION
Magnesium anode.
WARRANTY
5 years (See general sales conditions and warranty)
ACCESSORIES AND SPARE PARTS
See Accessories section for the entire list.

POLYWARM® COATED DHW STORAGE

PROMPT AVAILABILITY



INTERKA WB
HARD FOAM INSULATION

Model	Art. Nr.	Double wall heat exchanger surface [m²]	ErP ENERGY EFFICIENCY CLASS
80	3203160310001	0,36	C
100	3203160310002	0,54	C
150	3203160310003	0,82	C
200	3203160310004	1,00	C
300	3203160310015	1,40	C

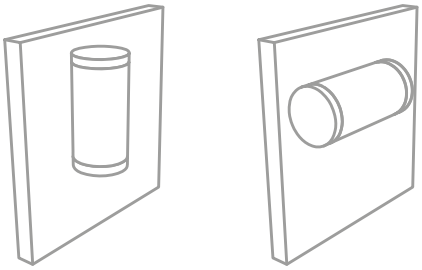

Vertical or horizontal wall hanged

Model	Output [KW]	Ignition time [min]	Production of D.H.W. [lt/h]	Production of D.H.W. [lt/10']	Weight [Kg]
80	8	27	190	112	24
100	11	24	263	144	30
150	15	26	372	212	41
200	20	25	508	285	49
300	24	31	606	401	65

Data have been calculated with primary water at 80 °C - DHW production from 10°C to 45°C, and storage at 60 °C

ACCESSORIES

FULL CONTROL electronic unit (mounted on tank)

Art. Nr.	for models
5220280000005	WB



For Class A models, only the version not pre-assembled on the tank is available.

Thermometer

Art. Nr.
5032240000107
5 units box



Magnesium anode

Art. Nr.	Model
7200000041015	80÷150
7200000041010	200÷300
2 units box	



Electric immersion heater with thermostat

Art. Nr.	Output	Connection
5240000000042	1,5 kW	1" 1/4



HEAT MANAGER + electric immersion heater 1,5 kW + probe +3m cable

Art. Nr.	Output [kW]
5240000000077	1,5



Products designed and manufactured for using within temperature and pressure limits in accordance to Art. 4.3 Directive 2014/68/EU (P.E.D.)

INTERKA

POLYWARM® COATED DOUBLE WALLED CALORIFIER FOR D.H.W. PRODUCTION

STORAGE		HEAT EXCHANGER	
Pmax	Tmax	Pmax	Tmax
6 bar	90 °C	1,5 bar	99 °C

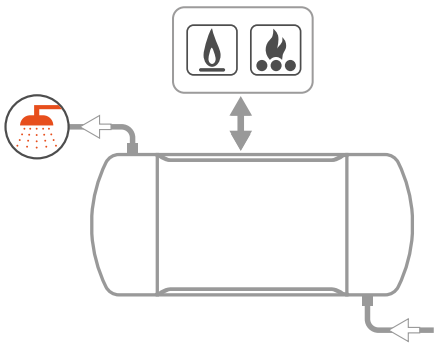

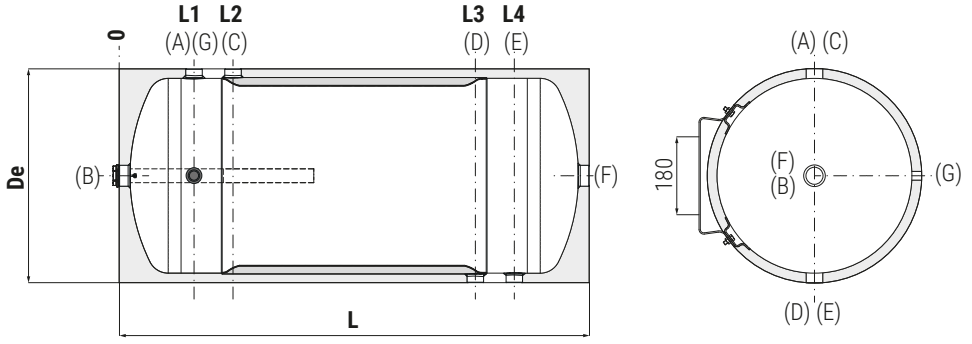

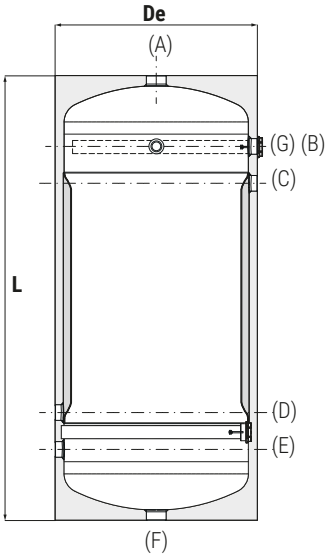

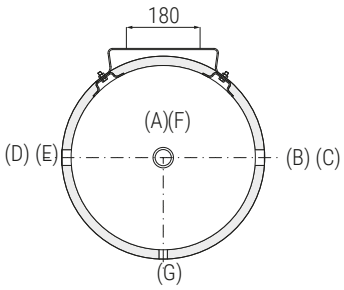

A	Domestic hot water outlet G 1"1/4
B	Magnesium anode G 1"1/4 F
C	Primary circuit inlet G 1"F
D	Primary circuit outlet G 1"F
E	Domestic cold water circuit inlet G 1"1/4 F
F	Connection G 1"1/4 F
G	Instrumentation G 1/2" F

POSSIBLE VERTICAL INSTALLATION

NOTE:
THIS INSTALLATION MAY REDUCE THE D.H.W. STORAGE AVAILABILITY.

Model	Volume	De	L	L1	L2	L3	L4	C-D
	[lt]	[mm]						Connections F
80	82	456	770	165	260	510	605	1"
100	100	456	920	165	260	660	755	1"
150	152	510	1086	173	268	818	913	1"
200	203	560	1170	190	285	885	980	1"
300	293	610	1399	230	325	1075	1170	1"

Net volume data according to EN 15332 available on product label.

Products designed and manufactured for using within temperature and pressure limits in accordance to Art. 4.3 Directive 2014/68/EU (P.E.D.)

INTERKA **PANAREA**

POLYWARM® CALORIFIER WITH DOUBLE WALL EXCHANGER SPECIFIC FOR THERMOSYPHON SOLAR THERMAL SYSTEMS



APPLICATION
Production and storage of domestic hot water (DHW).
MATERIAL
Mild steel Polywarm® coated (Attestation ACS - EN 16421).
HEAT EXCHANGER
Double wall heat exchanger.

INSULATION
High thermal insulation with ecological polyurethane hard foam.
External coating in metal sheet protected by a particular anticorrosive treatment.
CATHODE PROTECTION
Magnesium anode.
WARRANTY
5 years (See general sales conditions and warranty)
ACCESSORIES AND SPARE PARTS
See Accessories section for the entire list.

POLYWARM® COATED DHW STORAGE

PROMPT AVAILABILITY

		Model	Art. Nr.	Double wall heat exchanger		ErP ENERGY EFFICIENCY CLASS
				Surface [m²]	Volume [lt]	
	**INTERKA PANAREA WB** HARD FOAM INSULATION	150	3068160980166	0,80	8,0	B
		200	3068160980167	1,20	12,0	B
		300	3068160980168	2,05	21,0	B

ACCESSORIES

Electric immersion heater with cover

Art. Nr.	Output	Connection
5240000000073	1,5 kW	1" 1/4
See Cordivari INTEGRATED THERMAL SOLAR SYSTEMS catalogue		

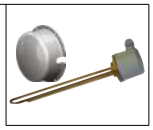

HEAT MANAGER

See Cordivari INTEGRATED THERMAL SOLAR SYSTEMS catalogue



Magnesium anode

Art. Nr.	Model
7200000041015	150
7200000041010	200, 300
2 units box	



Products designed and manufactured for using within temperature and pressure limits in accordance to Art. 4.3 Directive 2014/68/EU (P.E.D.)

INTERKA **PANAREA**

POLYWARM® CALORIFIER WITH DOUBLE WALL EXCHANGER SPECIFIC FOR THERMOSYPHON SOLAR THERMAL SYSTEMS

STORAGE		HEAT EXCHANGER	
Pmax	Tmax	Pmax	Tmax
6 bar	90 °C	2,5 bar	99 °C

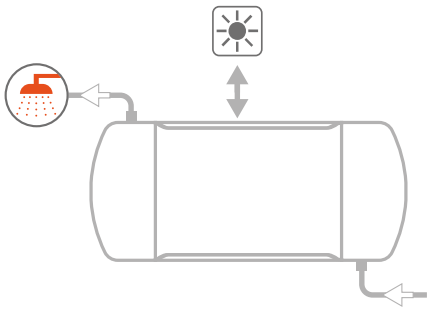

A	Domestic hot water outlet G 3/4" F
B	Connection for magnesium anode G 1" 1/4
C	Solar collector connection G 3/4" F
D	Solar collector connection G 3/4" F
E	Domestic water inlet G 3/4" F
F	Overflow volume G 1/2" F
G	Instrumentation G 1/2" F
H	Electric immersion heater G 1" 1/4 F (optional)

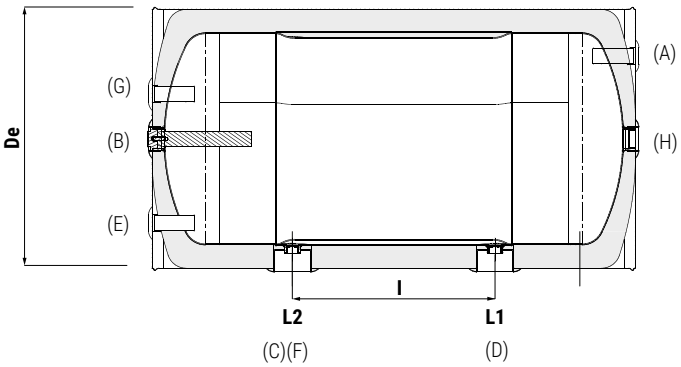

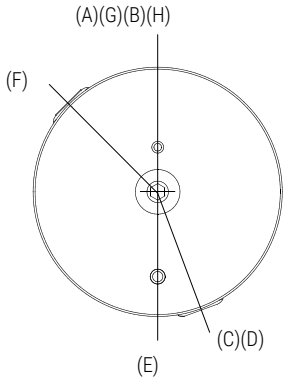



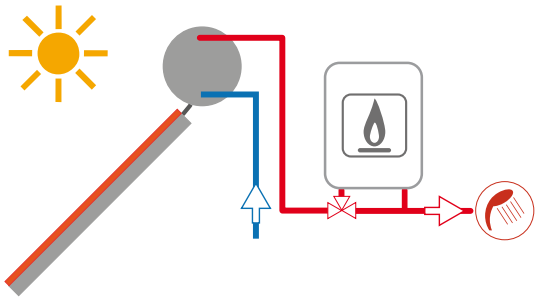

Model	Volume	De	L	I	L1	L2
	[lt]	[mm]				
150	143	550	1026	430	298	728
200	183	550	1286	640	323	963
300	270	550	1840	1090	375	1465

Net volume data according to EN 15332 available on product label.

Products designed and manufactured for using within temperature and pressure limits in accordance to Art. 4.3 Directive 2014/68/EU (P.E.D.)

HEAT PUMP STORAGE TANK
FOR D.H.W PRODUCTION

D.H.W. production

Heating

Heating/ Cooling








Model	ACQUAMAS® 1	ACQUAMAS® 2	ACQUAMAS® 3 CTS®	PUFFERMAS® 1 PDC	PUFFERMAS® 3 PDC CTS®
Page nr.	80	84	88	92	94
Application					
Type of heat exchangers	- MACS® module for immediate D.H.W.	- MACS® module for immediate D.H.W. - Fixed heat exchanger	- MACS® module for immediate D.H.W. - Fixed heat exchanger	- MACS® module for immediate D.H.W.	- MACS® module for immediate D.H.W. - Fixed heat exchanger
Number of heat exchangers					
Energy source					
Energy efficiency class	**C**	**C**	**C**	**B-C**	**B-C**
Insulation	Polyurethane hard foam	Polyurethane hard foam	Polyurethane hard foam	Polyurethane hard foam	Polyurethane hard foam
Available range	500, 600	500, 600	500, 600	800÷ 1500	800÷ 1500
Installation	floor standing	floor standing	floor standing	floor standing	floor standing
Suggested Application	Heat pump installations	Heat pump and other energy source installations (solar)	Heat pump and other energy source installations (traditional, solar)	Heat pump installations	Heat pump and other energy source installations (biomass, solar)








PUFFERMAS® 1 DOMUS	PUFFERMAS® 2 DOMUS	ECO-COMBI 1 PDC	ECO-COMBI 3 PDC	ECO COMBI 1 PDC HY	ECO COMBI 3 PDC HY
98	100	104	106	112	114
					
- MACS® module for immediate D.H.W.	- MACS® module for immediate D.H.W. - Fixed heat exchanger	- Corrugated Stainless steel 316L coil for D.H.W. production	- Corrugated Stainless steel 316L coil for D.H.W. production - Additional fixed coil heat exchangers	- Corrugated Stainless steel 316L coil for D.H.W. production - Integrated buffer tank	- Fixed coil heat exchanger - Corrugated Stainless steel 316L coil for D.H.W. production - Integrated buffer tank
					
					
B	**B-C**	**B-C**	**B-C**	**C**	**C**
Polyurethane hard foam	Polyurethane hard foam	Polyurethane hard foam	Polyurethane hard foam	Polyurethane hard foam	Polyurethane hard foam
200, 300	200÷ 400	300 ÷ 800	300 ÷ 800	300 ÷ 500	300 ÷ 500
floor standing	floor standing	floor standing	floor standing	floor standing	floor standing
Heat pump and other energy source installations (traditional)	Heat pump and other energy source installations (traditional, solar)	Heat pump installations	Heat pump and other energy source installations (traditional, solar)	Heat pump and other energy source installations (solar)	Heat pump and other energy source installations (solar)

ACQUAMAS® 1

THERMAL STORAGE WITH ACQUAMAS® MODULE FOR INSTANTANEOUS PRODUCTION OF DHW SPECIFIC FOR HEAT PUMPS



IMMEDIATE DHW PRODUCTION

APPLICATION

Stratified storage of technical water, for instantaneous production of domestic hot water (DHW) with high flow rates and efficiency in systems with low temperature generators such as heat pumps (HP), **with integration of an auxiliary heat source plus a solar thermal system with thermal loading from above.**

MATERIAL

Mild steel, painted externally and untreated internally.

INSTANTANEOUS DHW PRODUCTION MODULE:

External ACQUAMAS® MODULE with 316L stainless steel plate heat exchanger for instantaneous production of domestic hot water (DHW), equipped with electronic control unit.

INSULATION

THERMAL STORAGE: High thermal insulation with ecological polyurethane hard foam.
ACQUAMAS® MODULE: contained within the EPP structure, with the function of housing and insulation.
Grey PVC external lining.

TECHNICAL DESCRIPTION

ACQUAMAS® thermal storage, specific for the accumulation of the heat produced by the thermal system and the instantaneous production of DHW, therefore without accumulation of domestic hot water, with the following advantages:
- ease of maintenance
- maximum hygiene in anti-legionella function.

WARRANTY

5 years (tank). See general sales conditions and warranty for electrical parts.

		Model	ACQUAMAS® MODULE (with stainless steel brazed plates)	Art. Nr.	ErP ENERGY EFFICIENCY CLASS
	 **ACQUAMAS® 1** HARD FOAM INSULATION	**500**	120	3251162314850	**C**
		600		3251162314851	**C**



Model	DHW module	DHW production (10-45°C) with accumulation T⩾60°C	Maximum availability of DHW (10-45°C) with accumulation at 60°C
		[lt/min]	[lt]
500	Module ACQUAMAS®	40	570
600		40	670

ACCESSORIES

Thermometer

Art. Nr.	
5032240000107	
5 units box	

Recirculation kit

Art. Nr.	
5221000000073	
DHW recirculation group	

Buffer tanks connecting kit

Art. Nr.	Connection	
5006170001001	1" 1/2	
Stainless steel extensible connecting kit - (200 ÷ 400 mm)		

Products designed and manufactured for using within temperature and pressure limits in accordance to Art. 4.3 Directive 2014/68/EU (P.E.D.)

ACQUAMAS® 1

THERMAL STORAGE WITH ACQUAMAS® MODULE FOR INSTANTANEOUS PRODUCTION OF DHW SPECIFIC FOR HEAT PUMPS

STORAGE		HEAT EXCHANGER STAINLESS STEEL PLATE (MACS®)		DHW HARDNESS
Pmax	Tmax	Pmax	Tmax	F max
4 bar	99 °C	10 bar	99 °C	30 °f

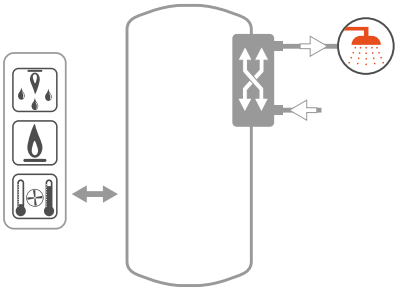

See TECHNICAL SUPPORT chapter for example of installation

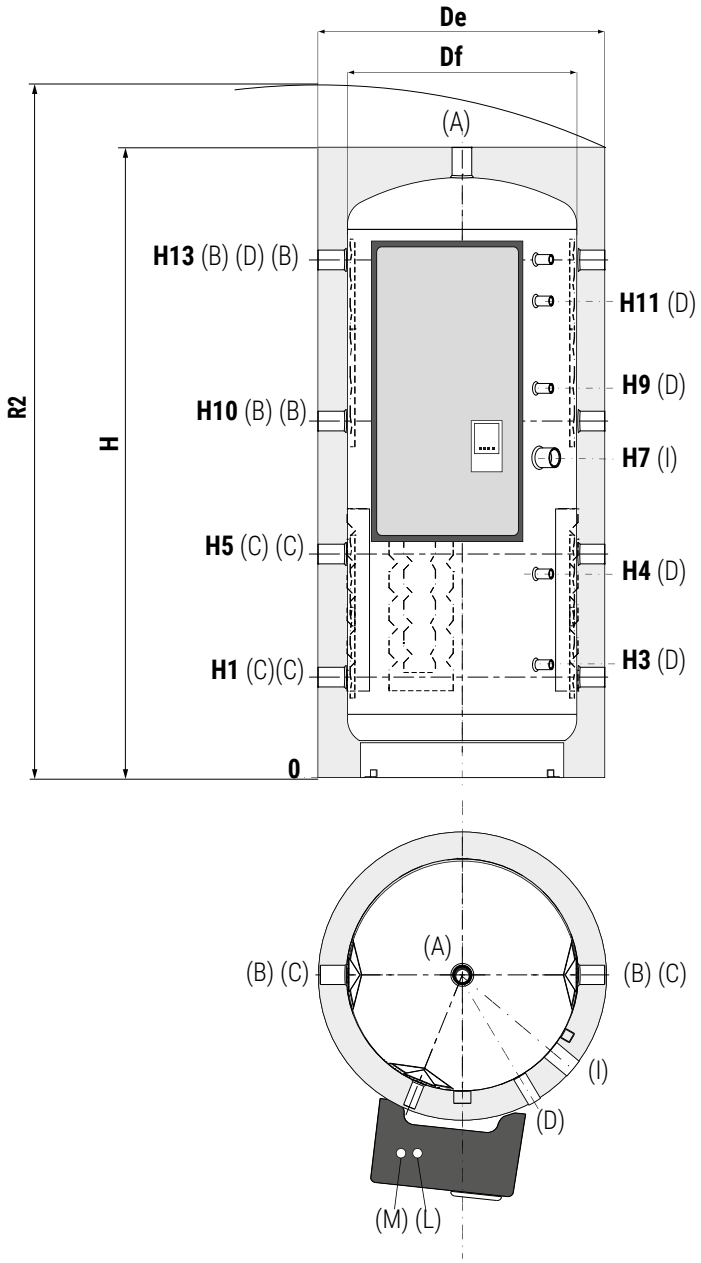

A	From generator/Air purge G 1"1/2 F
B	From generator G 1"1/2 F
C	To generator G 1"1/2 F
D	Instrumentation G 1/2" F
I	Connection for electric immersion heater G 1"1/2 F
L	Domestic hot water outlet G 1" M
M	Domestic cold water circuit inlet G 1" M

ACQUAMAS® 1

Model	Volume	De	Df	H	R2	H1	H3	H4	H5	H7	H9	H10	H11	H13
	[lt]	[mm]												
500	478	750	650	1619	1785	247	360	425	533	870	1025	1011	1130	1343
600	560	750	650	1870	2015	247	360	582	695	970	1200	1144	1485	1593

Net volume data according to EN 15332 available on product label.

Products designed and manufactured for using within temperature and pressure limits in accordance to Art. 4.3 Directive 2014/68/EU (P.E.D.)



EXAMPLE OF INSTALLATION WITH **ACQUAMAS® 1**

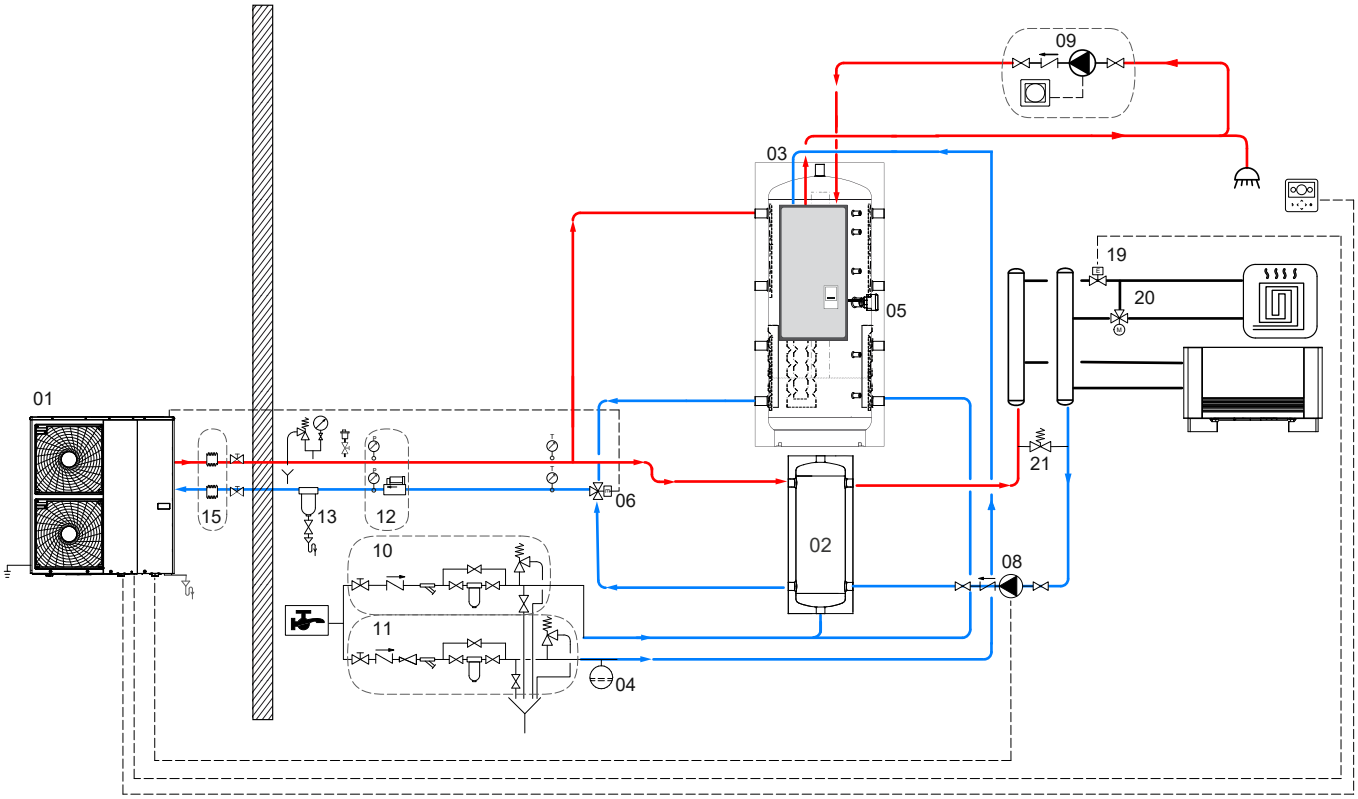

1	Heat Pump
2	Heating/cooling buffer tank Buffer tank PDC
3	Thermal storage ACQUAMAS® 1
4	Expansion Vessel
5	DHW Electric Resistance
6	3-way motorized valve
8	Circulation group
9	DHW Recirculation Kit
10	Compulsory components for the compliance of Sanitary Water with current regulations (Legislative Decree 31/2001, UNI 8065/2019, etc) and with the system requirements for the warranty conditions.
11	Compulsory components for the compliance of the System Water with the regulations in force (Legislative Decree 31/2001, UNI 8065/2019, etc) and with the system requirements for the warranty conditions.
12	Flow meter or pair of pressure gauges
13	Magnetic dirt separator
15	Anti-vibration joints
19	Zone valve
20	Low Temperature System Mixing
21	By-pass valve

The following schemes are purely illustrative. To realize the installation, always refer to a qualified technician.

ACQUAMAS® 1

MAXIMUM DHW FLOW RATE THAT CAN BE PRODUCED WITH COLD SANITARY WATER AT 10 °C





ACQUAMAS® MODULE FOR INSTANT PRODUCTION OF DHW
- 2-40 LITERS/MINUTE
- BRAZED PLATES EXCHANGER IN STAINLESS 316L
- STAINLESS DHW FITTINGS
- ELECTRONIC MANAGEMENT UNIT

ELECTRONIC MACS® 120 - TECHNICAL DATA CHART

The curves shown in these charts allow to obtain the DHW flow rate that can be produced by the individual MACS® module according to the storage / primary circuit temperature (value on the horizontal axis).
The curves are parameterized based on the desired DHW temperature and indicate the maximum DHW flow rate that can be produced at that temperature (with cold water inlet temperature at 10°C)
The MACS modules can produce all the DHW flow rates included in the area between the minimum activation flow rate and maximum flow curve of each temperature.

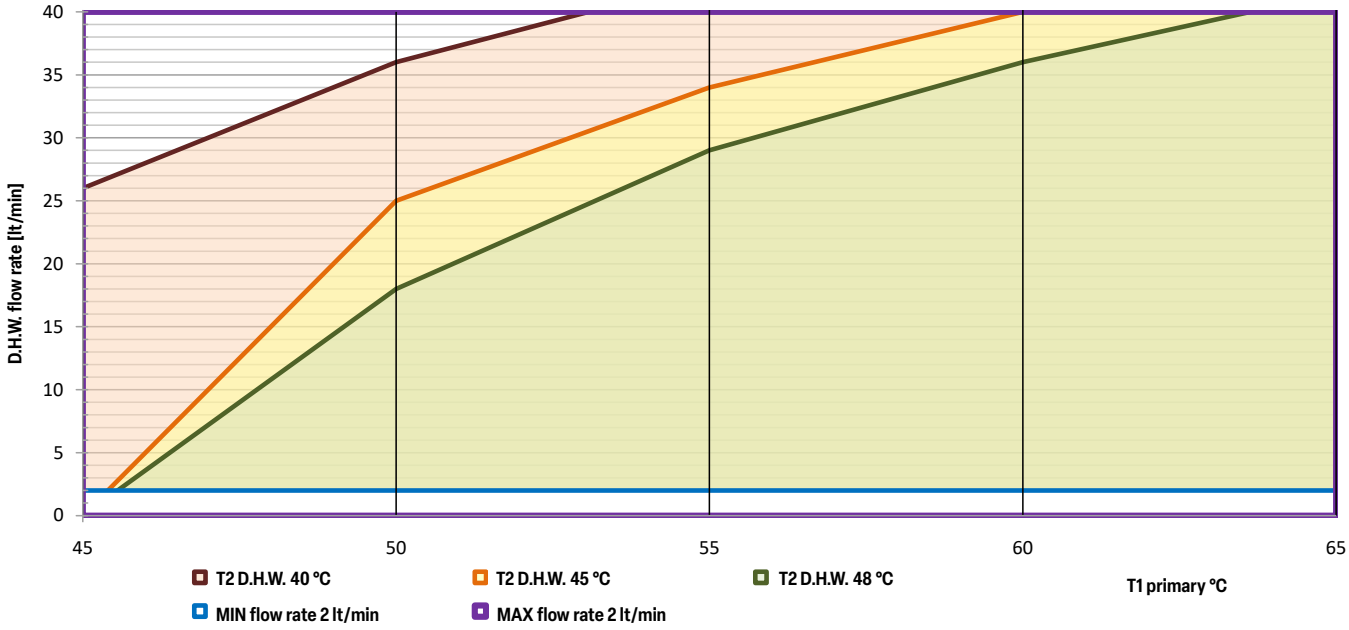

ACQUAMAS® 2

THERMAL STORAGE WITH ACQUAMAS® MODULE FOR INSTANTANEOUS PRODUCTION OF DHW AND 1 HEAT EXCHANGER FOR AN AUXILIARY GENERATOR



IMMEDIATE DHW PRODUCTION

APPLICATION
Stratified storage of technical water with hydronic module ACQUAMAS®, for instantaneous production of domestic hot water (DHW) with high flow rates and efficiency in systems with low temperature generators such as heat pumps (HP), **with 1 fixed heat exchanger, for integration of an auxiliary heat source.**

MATERIAL
Mild steel, painted externally and untreated internally.

INSTANTANEOUS DHW PRODUCTION MODULE:
External ACQUAMAS® MODULE with 316L stainless steel plate heat exchanger for instantaneous production of domestic hot water (DHW), equipped with electronic control unit.

HEAT EXCHANGER (TECHNICAL WATER STORAGE):
The thermal storage is equipped with 1 fixed heat exchanger in mild steel to integrate an auxiliary generator.

INSULATION
THERMAL STORAGE: High thermal insulation with ecological polyurethane hard foam.
ACQUAMAS® MODULE: contained within the EPP structure, with the function of housing and insulation.
Grey PVC external lining.

TECHNICAL DESCRIPTION
ACQUAMAS® thermal storage, specific for the accumulation of the heat produced by the thermal system and the instantaneous production of DHW, therefore without accumulation of domestic hot water, with the following advantages:
- ease of maintenance
- maximum hygiene in anti-legionella function.

WARRANTY
5 years (tank). See general sales conditions and warranty for electrical parts.

		Model	ACQUAMAS® MODULE (with stainless steel brazed plates)	Art. Nr.	Heat exchangers surface [m²]	ErP ENERGY EFFICIENCY CLASS
	**ACQUAMAS® 2** HARD FOAM INSULATION	500	120	3251162314860	1,9	C
		600		3251162314861	1,9	C



PATENTED

Model	DHW module	DHW production (10-45°C) with accumulation T≥ 60°C	Maximum availability of DHW (10-45°C) with accumulation at 60°C
		[lt/min]	[lt]
500	Module ACQUAMAS®	40	570
600		40	670

ACCESSORIES

Thermometer

Art. Nr.	
5032240000107	
5 units box	

Recirculation kit

Art. Nr.	
5221000000073	
DHW recirculation group	

Buffer tanks connecting kit

Art. Nr.	Connection	
5006170001001	1" 1/2	
Stainless steel extensible connecting kit - (200 ÷ 400 mm)		

Products designed and manufactured for using within temperature and pressure limits in accordance to Art. 4.3 Directive 2014/68/EU (P.E.D.)

ACQUAMAS® 2

THERMAL STORAGE WITH ACQUAMAS® MODULE FOR INSTANTANEOUS PRODUCTION OF DHW AND 1 HEAT EXCHANGER FOR AN AUXILIARY GENERATOR

STORAGE		FIXED HEAT EXCHANGER		HEAT EXCHANGER STAINLESS STEEL PLATE (MACS®)		DHW HARDNESS
Pmax	Tmax	Pmax	Tmax	Pmax	Tmax	F max
4 bar	99 °C	12 bar	110 °C	10 bar	99 °C	30 °f

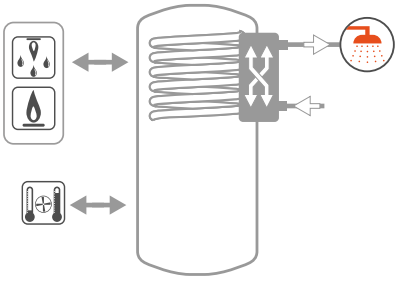

See TECHNICAL SUPPORT chapter for example of installation

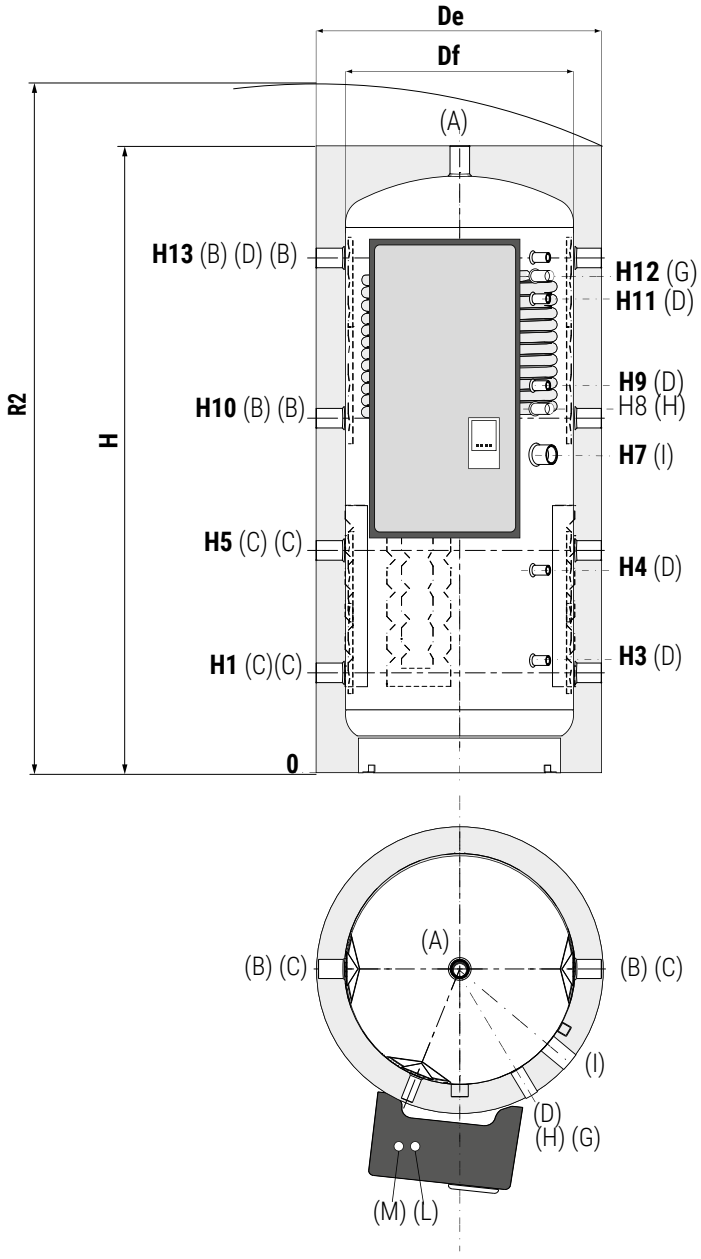

A	From generator/Air purge G 1"1/2 F
B	From generator G 1"1/2 F
C	To generator G 1"1/2 F
D	Instrumentation G 1/2" F
G	Fixed heat exchanger inlet G 1" F
H	Fixed heat exchanger outlet G 1" F
I	Connection for electric immersion heater G 1"1/2 F
L	Domestic hot water outlet G 1" M
M	Domestic cold water circuit inlet G 1" M

ACQUAMAS® 2

Model	Volume	De	Df	H	R2	H1	H3	H4	H5	H7	H8	H9	H10	H11	H12	H13
	[lt]	[mm]														
500	478	750	650	1619	1785	247	360	425	533	870	930	1025	1011	1130	1231	1343
600	560	750	650	1870	2015	247	360	582	695	970	1090	1200	1144	1485	1391	1593

Net volume data according to EN 15332 available on product label.

Products designed and manufactured for using within temperature and pressure limits in accordance to Art. 4.3 Directive 2014/68/EU (P.E.D.)



EXAMPLE OF INSTALLATION WITH **ACQUAMAS® 2**

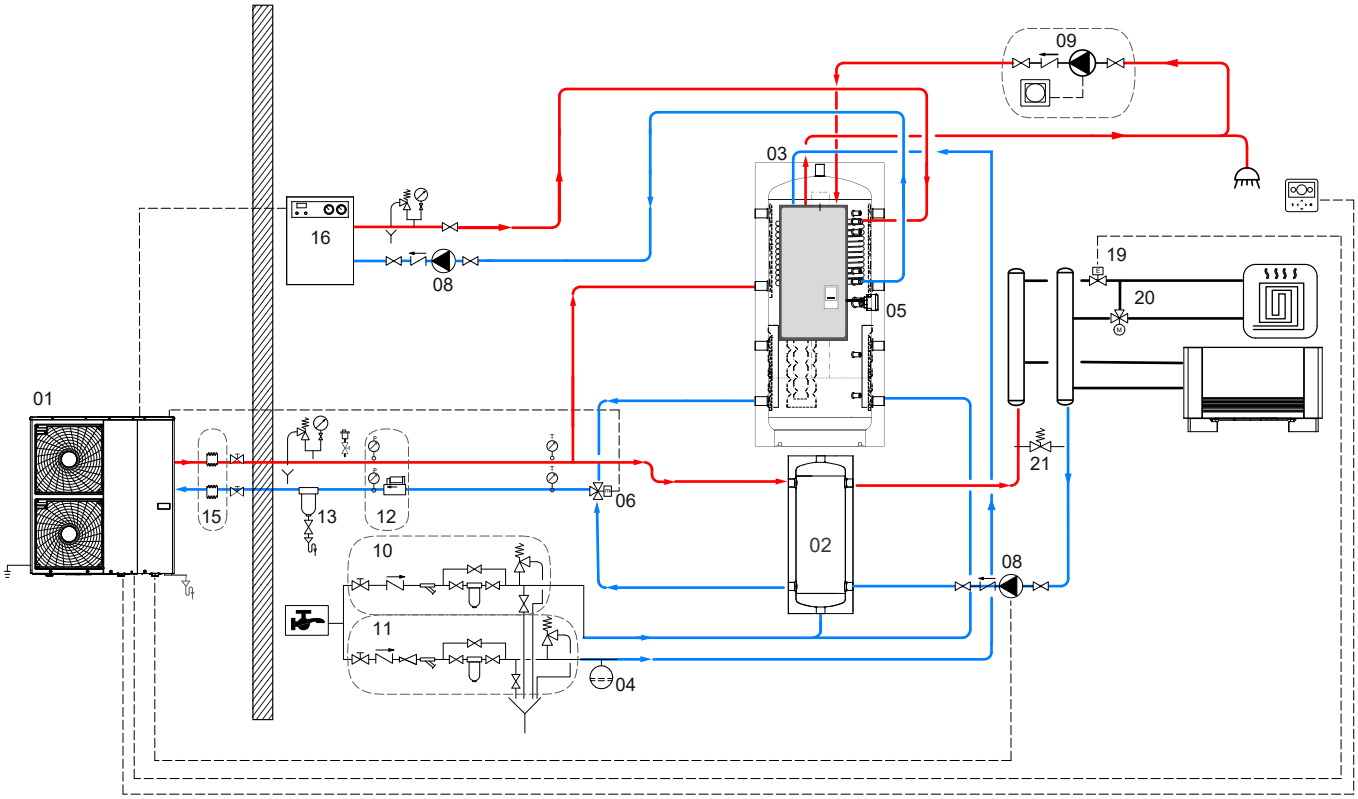

1	Heat Pump
2	Heating/cooling buffer tank Buffer tank PDC
3	Thermal storage ACQUAMAS® 2
4	Expansion Vessel
5	DHW Electric Resistance
6	3-way motorized valve
8	Circulation group
9	DHW Recirculation Kit
10	Compulsory components for the compliance of Sanitary Water with current regulations (Legislative Decree 31/2001, UNI 8065/2019, etc) and with the system requirements for the warranty conditions.
11	Compulsory components for the compliance of the System Water with the regulations in force (Legislative Decree 31/2001, UNI 8065/2019, etc) and with the system requirements for the warranty conditions.
12	Flow meter or pair of pressure gauges
13	Magnetic dirt separator
15	Anti-vibration joints
16	Integrative generator
19	Zone valve
20	Low Temperature System Mixing
21	By-pass valve

The following schemes are purely illustrative. To realize the installation, always refer to a qualified technician.

ACQUAMAS® 2

MAXIMUM DHW FLOW RATE THAT CAN BE PRODUCED WITH COLD SANITARY WATER AT 10 °C





ACQUAMAS® MODULE FOR INSTANT PRODUCTION OF DHW
- 2-40 LITERS/MINUTE
- BRAZED PLATES EXCHANGER IN STAINLESS 316L
- STAINLESS DHW FITTINGS
- ELECTRONIC MANAGEMENT UNIT

ELECTRONIC MACS® 120 - TECHNICAL DATA CHART

The curves shown in these charts allow to obtain the DHW flow rate that can be produced by the individual MACS® module according to the storage / primary circuit temperature (value on the horizontal axis).
The curves are parameterized based on the desired DHW temperature and indicate the maximum DHW flow rate that can be produced at that temperature (with cold water inlet temperature at 10°C)
The MACS modules can produce all the DHW flow rates included in the area between the minimum activation flow rate and maximum flow curve of each temperature.

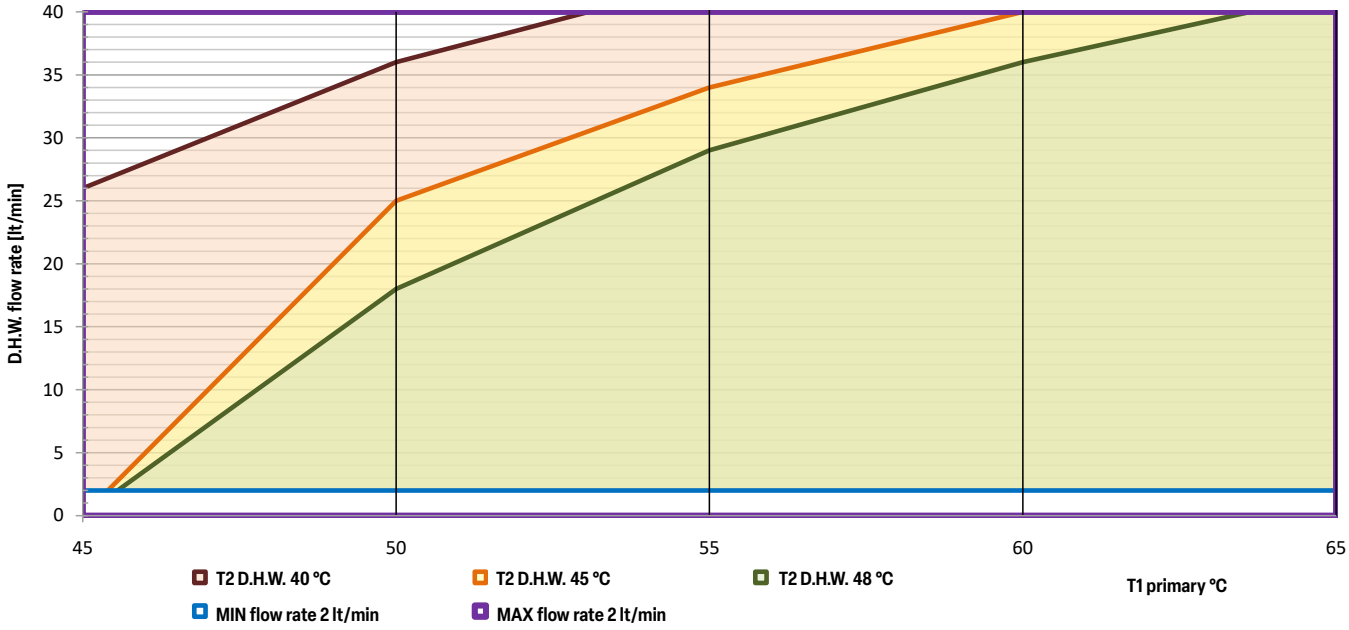

ACQUAMAS® 3 CTS®

THERMAL STORAGE WITH ACQUAMAS® MODULE FOR INSTANTANEOUS PRODUCTION OF DHW AND 2 HEAT EXCHANGERS FOR TWO AUXILIARY GENERATORS



IMMEDIATE DHW PRODUCTION

APPLICATION
Stratified storage of technical water with hydronic module ACQUAMAS®, for instantaneous production of domestic hot water (DHW) with high flow rates and efficiency in systems with low temperature generators such as heat pumps (HP), **with 1 fixed heat exchanger, for integration of an auxiliary heat source and lower CTS exchanger model for integration of solar thermal system, with thermal loading from above.**

MATERIAL
Mild steel, painted externally and untreated internally.

INSTANTANEOUS DHW PRODUCTION MODULE:
External ACQUAMAS® MODULE with 316L stainless steel plate heat exchanger for instantaneous production of domestic hot water (DHW), equipped with electronic control unit.

HEAT EXCHANGER (TECHNICAL WATER STORAGE):
The thermal storage is equipped with 2 fixed heat exchangers in mild steel: an upper one to integrate an auxiliary generator and a lower one, with a CTS® thermal loading system from above, which allows to make the most of solar energy.

INSULATION
THERMAL STORAGE: High thermal insulation with ecological polyurethane hard foam.
ACQUAMAS® MODULE: contained within the EPP structure, with the function of housing and insulation.
Grey PVC external lining.

TECHNICAL DESCRIPTION
ACQUAMAS® thermal storage, specific for the accumulation of the heat produced by the thermal system and the instantaneous production of DHW, therefore without accumulation of domestic hot water, with the following advantages:
- ease of maintenance
- maximum hygiene in anti-legionella function.

WARRANTY
5 years (tank). See general sales conditions and warranty for electrical parts.

	Model	ACQUAMAS® MODULE (with stainless steel brazed plates)	Art. Nr.	Heat exchanger surface [m²]		ErP ENERGY EFFICIENCY CLASS
				Upper	Lower	
ACQUAMAS® 3 CTS® HARD FOAM INSULATION	500	120	3251162314870	1,9	2,1	C
	600		3251162314871	1,9	2,1	C

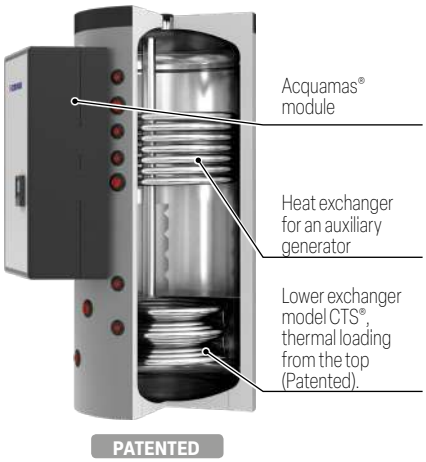

PATENTED

Model	DHW module	DHW production (10-45°C) with accumulation T⩾ 60°C	Maximum availability of DHW (10-45°C) with accumulation at 60°C
		[lt/min]	[lt]
500	ACQUAMAS® module	40	570
600		40	670

ACCESSORIES

Thermometer

Art. Nr.
5032240000107
5 units box



Recirculation kit

Art. Nr.
5221000000073
DHW recirculation group



Buffer tanks connecting kit

Art. Nr.	Connection
5006170001001	1" 1/2
Stainless steel extensible connecting kit - (200 ÷ 400 mm)	



Products designed and manufactured for using within temperature and pressure limits in accordance to Art. 4.3 Directive 2014/68/EU (P.E.D.)

ACQUAMAS® **3 CTS®**

THERMAL STORAGE WITH ACQUAMAS® MODULE FOR INSTANTANEOUS PRODUCTION OF DHW AND 2 HEAT EXCHANGERS FOR TWO AUXILIARY GENERATORS

STORAGE		FIXED HEAT EXCHANGER		HEAT EXCHANGER STAINLESS STEEL PLATE (MACS®)		DHW HARDNESS
Pmax	Tmax	Pmax	Tmax	Pmax	Tmax	F max
4 bar	99 °C	12 bar	110 °C	10 bar	99 °C	30 °f

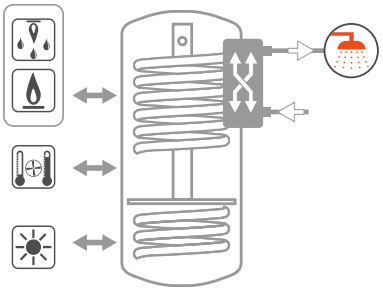

See TECHNICAL SUPPORT chapter for example of installation

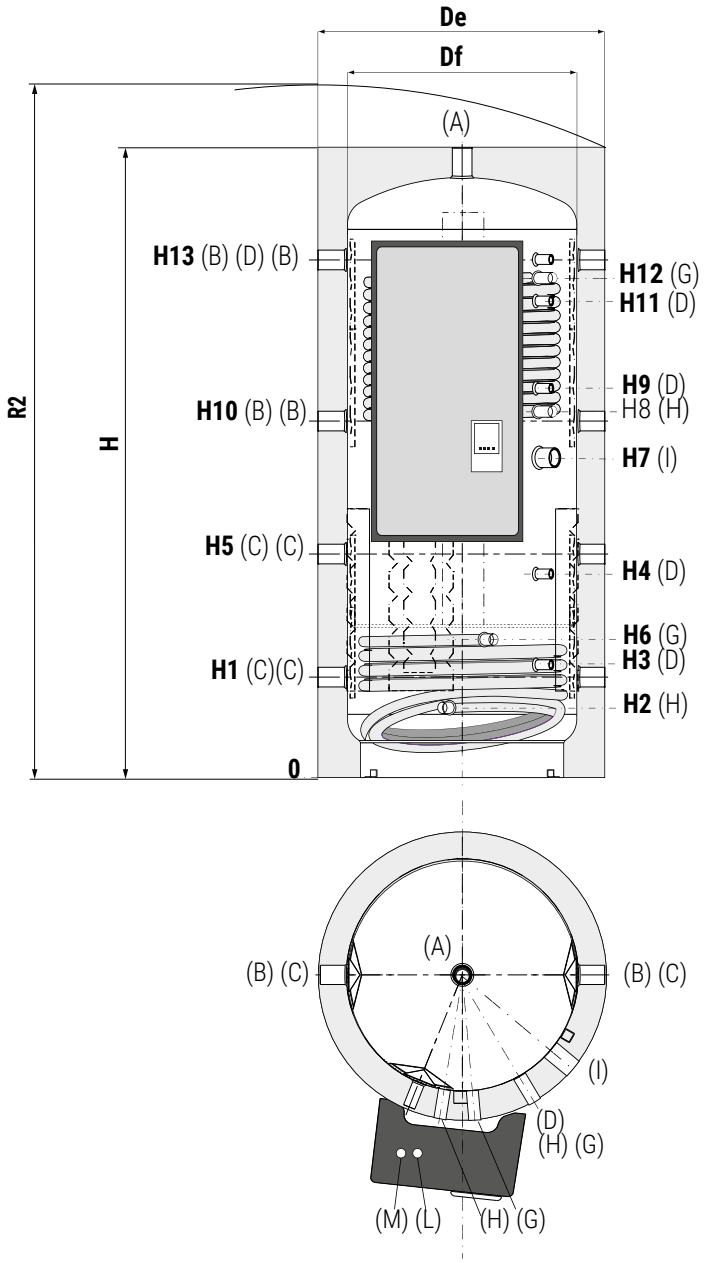

A	From generator/Air purge G 1"1/2 F
B	From generator G 1"1/2 F
C	To generator G 1"1/2 F
D	Instrumentation G 1/2" F
G	Fixed heat exchanger inlet G 1" F
H	Fixed heat exchanger outlet G 1" F
I	Connection for electric immersion heater G 1"1/2 F
L	Domestic hot water outlet G 1" M
M	Domestic cold water circuit inlet G 1" M

ACQUAMAS® 3 CTS®

Model	Volume	De	Df	H	H1	H2	H3	H4	H5	H6	H7	H8	H9	H10	H11	H12	H13
	[lt]	[mm]															
500	478	750	650	1619	247	215	360	425	533	425	870	930	1025	1011	1130	1231	1343
600	560	750	650	1870	247	215	360	582	695	425	970	1090	1200	1144	1485	1391	1593

Net volume data according to EN 15332 available on product label.

Products designed and manufactured for using within temperature and pressure limits in accordance to Art. 4.3 Directive 2014/68/EU (P.E.D.)



EXAMPLE OF INSTALLATION WITH **ACQUAMAS® 3 CTS®**

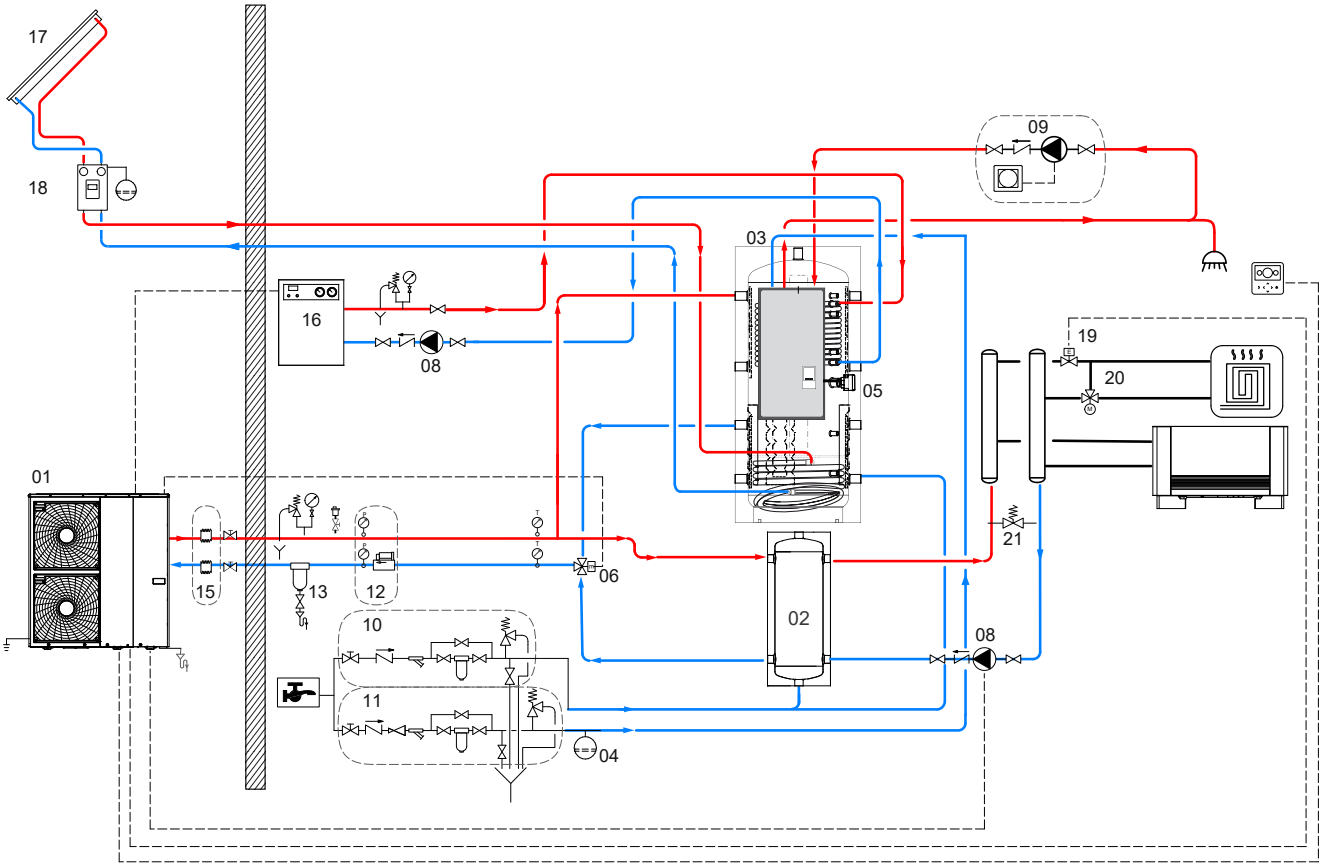

1	Heat Pump
2	Heating/cooling buffer tank Buffer tank PDC
3	Thermal storage ACQUAMAS® 3 CTS®
4	Expansion Vessel
5	DHW Electric Resistance
6	3-way motorized valve
8	Circulation group
9	DHW Recirculation Kit
10	Compulsory components for the compliance of Sanitary Water with current regulations (Legislative Decree 31/2001, UNI 8065/2019, etc) and with the system requirements for the warranty conditions.
11	Compulsory components for the compliance of the System Water with the regulations in force (Legislative Decree 31/2001, UNI 8065/2019, etc) and with the system requirements for the warranty conditions.
12	Flow meter or pair of pressure gauges
13	Magnetic dirt separator
15	Anti-vibration joints
16	Integrative generator
17	Thermal solar collectors
18	Solar system circulation group
19	Zone valve
20	Low Temperature System Mixing
21	By-pass valve

The following schemes are purely illustrative. To realize the installation, always refer to a qualified technician.

ACQUAMAS® **3 CTS®**

MAXIMUM DHW FLOW RATE THAT CAN BE PRODUCED WITH COLD SANITARY WATER AT 10 °C





ACQUAMAS® MODULE FOR INSTANT PRODUCTION OF DHW
- 2-40 LITERS/MINUTE
- BRAZED PLATES EXCHANGER IN STAINLESS 316L
- STAINLESS DHW FITTINGS
- ELECTRONIC MANAGEMENT UNIT

ELECTRONIC MACS® 120 - TECHNICAL DATA CHART

The curves shown in these charts allow to obtain the DHW flow rate that can be produced by the individual MACS® module according to the storage / primary circuit temperature (value on the horizontal axis).
The curves are parameterized based on the desired DHW temperature and indicate the maximum DHW flow rate that can be produced at that temperature (with cold water inlet temperature at 10°C)
The MACS modules can produce all the DHW flow rates included in the area between the minimum activation flow rate and maximum flow curve of each temperature.

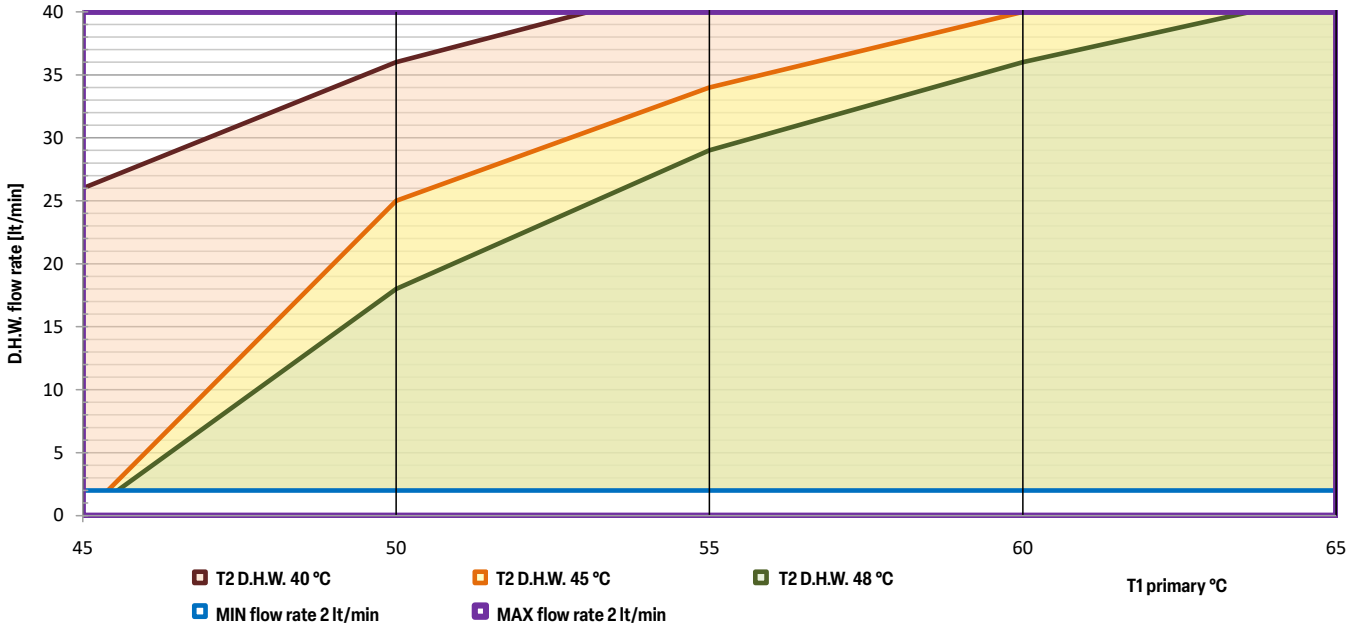

PUFFERMAS® 1 PDC

BUFFER TANK FOR HEATING WATER WITH MACS® MODULE FOR IMMEDIATE D.H.W. PRODUCTION



APPLICATION
Stratified storage of technical water and instantaneous production of domestic hot water (DHW) with high flow rates.

MATERIAL
Mild steel painted on the outside. Buffer intented for closed circuit installation, so no anti-corrosion treatment is provided.

D.H.W. HEAT EXCHANGER
External MACS® MODULE 180 HP with 316L stainless steel plate heat exchanger for instantaneous production of domestic hot water (DHW)

TECHNICAL DESCRIPTION
PUFFERMAS® 1 PDC, specifically designed for storaging heat produced by low temperature sources such as heat pumps (PDC), allows a rapid DHW production using a thermal storage tank, with the following advantages:
- to reduce dimensions of the water heater needed
- easy maintenance
- maximum hygiene for anti-legionellosis bacteria's
- to produce more DHW than the quantity obtained by boiler with similar capacity because hot water is stored at a higher temperature than DHW.

INSULATION
Buffer tank: High thermal insulation with ecological hard polyurethane foam. Models 800-1000 available with dismountable hard foam insulation.
MACS® module 180 HP: insulating PPE cover.
Grey PVC external lining.

WARRANTY
5 years (tank). See general sales conditions and warranty for electrical parts.

ACCESSORIES AND SPARE PARTS
See Accessories section for the entire list.

IMMEDIATE DHW PRODUCTION


Dismountable insulation





PUFFERMAS® 1 PDC VB
HARD FOAM INSULATION

Model	MACS® module model	Art. Nr.	SLB heat exchanger model / plates nr.	ErP ENERGY EFFICIENCY CLASS
800	180 HP	3251162314872	SLB40 / 60	B
1000		3251162314873		C
1500		3251162314874		C



Model	DHW module	DHW production (10-45°C) with accumulation T≥ 60°C	Maximum availability of DHW (10-45°C) with accumulation at 60°C
		[lt/min]	[lt]
800	MACS® 180 HP	50	970
1000		50	1140
1500		50	1740

ACCESSORIES

Thermometer

Art. Nr.
5032240000107
5 units box



Recirculation kit

Art. Nr.
5221000000073
DHW recirculation group



Buffer tanks connecting kit

Art. Nr.	Connection
5006170001001	1" 1/2
Stainless steel extensible connecting kit - (200 ÷ 400 mm)	



Products designed and manufactured for using within temperature and pressure limits in accordance to Art. 4.3 Directive 2014/68/EU (P.E.D.)

PUFFERMAS® 1 PDC

BUFFER TANK FOR HEATING WATER WITH MACS® MODULE FOR IMMEDIATE D.H.W. PRODUCTION

STORAGE		STAINLESS STEEL 316L BRAZED PLATE EXCHANGER (MACS®)		DHW HARDNESS
Pmax	Tmax	Pmax	Tmax	F max
4 bar	99 °C	10 bar	99 °C	30 °f

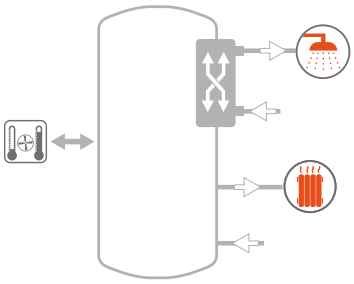

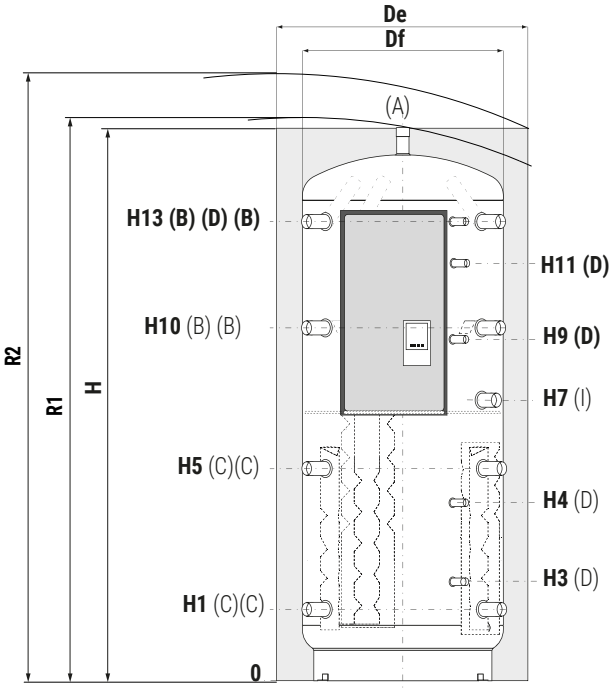

A	Heating delivery/from generator/Air purge G 1"1/2 F
B	Heating delivery/from generator G 1"1/2 F
C	Heating return/to generator G 1"1/2 F
D	Instrumentation G 1/2" F
I	Connection for electric immersion heater G 1"1/2 F
L	Domestic hot water outlet G 1" M
M	Domestic cold water circuit inlet G 1" M

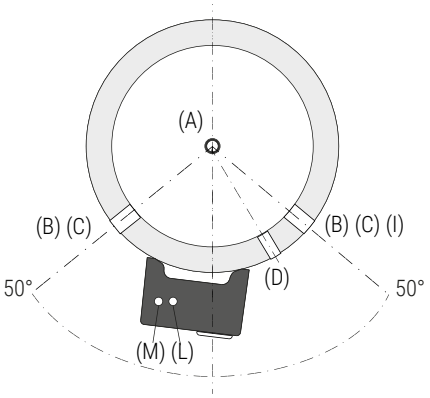



Dismountable insulation

Model	Volume	De	Df	H	R1	R2	H1	H3	H4	H5	H7	H9	H10	H11	H13
	[lt]	[mm]													
800	805	940	790	1840	1880	2067	265	378	584	690	918	1115	1115	1442	1541
1000	946	940	790	2130	2165	2329	265	384	656	787	1145	1388	1309	1588	1831
1500	1454	1100	950	2250	//	2505	313	432	736	845	1236	1396	1377	1783	1909

Net volume data according to EN 15332 available on product label.

MACS® ELECTRONIC MODULE FOR IMMEDIATE D.H.W. PRODUCTION

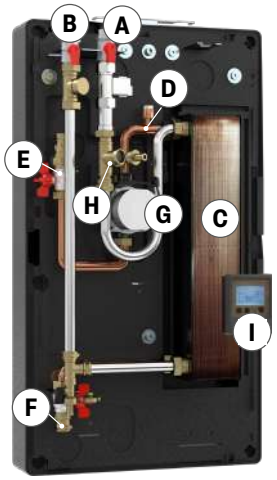

A	Domestic hot water outlet (DHW)
B	Domestic Water inlet
C	Stainless steel 316L brazed plate exchanger
D	Flow rate/ temperature probe
E	Primary Inlet
F	Primary Outlet
G	"Energy Savings" Circulation Pump
H	Valves In/Out for DHW
I	Electronic control unit

FOR DHW FLOW RATE CHARTS REFER TO HYDRONIC SECTION - ELECTRONIC MACS® MODULE

The MACS® module is an external unit that immediately produces D.H.W., using the heat energy stored in the Buffer thanks to the stainless steel plate exchanger, granting safety and comfort with the possibility to regulate outlet temperature.
With the new electronic regulation system, the management of the temperature on the DHW side is guaranteed and maintained in an optimal manner and with immediate response times from the electronic control unit on the module.

Products designed and manufactured for using within temperature and pressure limits in accordance to Art. 4.3 Directive 2014/68/EU (P.E.D.)

PUFFERMAS® **3 CTS PDC**

BUFFER TANKS FOR HEATING WATER WITH STRATIFICATION DEVICE, FIXED COILS AND MACS® MODULE FOR INSTANTANEOUS PRODUCTION OF DHW



APPLICATION
Stratified thermal storage of technical water with instantaneous production of domestic hot water (DHW) on high flow rates and efficiencies. Improvement of solar circuit efficiency, with low temperature primary source such as heat pump and auxiliary solar thermal source with the "Top to Bottom" CTS Stratification Device.

MATERIAL
Mild steel painted on the outside. Buffer intented for closed circuit installation, so no anti-corrosion treatment is provided.

D.H.W. HEAT EXCHANGER
External MACS® MODULE 180 HP with 316L stainless steel plate heat exchanger for instantaneous production of domestic hot water (DHW)

HEATING WATER HEAT EXCHANGER
The tank contains two fixed heat exchangers in mild steel: an upper one to integrate a further thermal source and a lower one, with CTS Stratification Device for the maximum exploitation of the solar thermal energy.

TECHNICAL DESCRIPTION
PUFFERMAS® 3 CTS PDC, specifically designed for the storage of heat produced by low temperature sources such as heat pumps, allows a rapid DHW production using a thermal storage tank, with the following advantages:
- to reduce dimensions of the water heater needed
- easy maintenance
- maximum hygiene for anti-legionellosis bacteria's
- to produce more DHW than the quantity obtained by boiler with similar capacity because hot water is stored at a higher temperature than DHW.

PUFFERMAS® 3 CTS PDC can integrate a third heat source in addition to Solar and Heat Pump.

INSULATION
Buffer tank: High thermal insulation with ecological hard polyurethane foam. Models 800-1000 available with dismountable hard foam insulation.
MACS® module 180 HP: insulating PPE cover.
Grey PVC external lining.

WARRANTY
5 years (tank). See general sales conditions and warranty for electrical parts.

ACCESSORIES AND SPARE PARTS
See Accessories section for the entire list.

IMMEDIATE DHW PRODUCTION

Dismountable insulation



PUFFERMAS® 3 CTS VB
HARD FOAM INSULATION

Model	MACS® module model	Art. Nr.	SLB heat exchanger model / plates nr.	Heat exchanger surface [m²] Upper	Lower	ErP ENERGY EFFICIENCY CLASS
800	180 HP	3251162316572	SLB40 / 60	1,8	2,5	B
1000		3251162316573		2,5	3,1	C
1500		3251162316574		2,8	3,8	C



Model	DHW module	DHW production (10-45°C) with accumulation T≥ 60°C [lt/min]	Maximum availability of DHW (10-45°C) with accumulation at 60°C [lt]
800	MACS® 180 HP	50	970
1000		50	1140
1500		50	1740

ACCESSORIES

Thermometer

Art. Nr.
5032240000107
5 units box



Recirculation kit

Art. Nr.
5221000000073
DHW recirculation group



Buffer tanks connecting kit

Art. Nr.	Connection
5006170001001	1" 1/2
Stainless steel extensible connecting kit - (200 ÷ 400 mm)	



Products designed and manufactured for using within temperature and pressure limits in accordance to Art. 4.3 Directive 2014/68/EU (P.E.D.)

PUFFERMAS® **3 CTS PDC**

BUFFER TANKS FOR HEATING WATER WITH STRATIFICATION DEVICE, FIXED COILS AND MACS® MODULE FOR INSTANTANEOUS PRODUCTION OF DHW

STORAGE		FIXED HEAT EXCHANGER		HEAT EXCHANGER STAINLESS STEEL PLATE (MACS®)		DHW HARDNESS
Pmax	Tmax	Pmax	Tmax	Pmax	Tmax	F max
4 bar	99 °C	12 bar	110 °C	10 bar	99 °C	30 °f

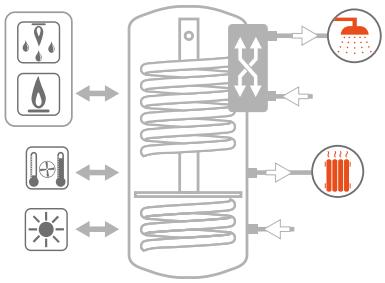

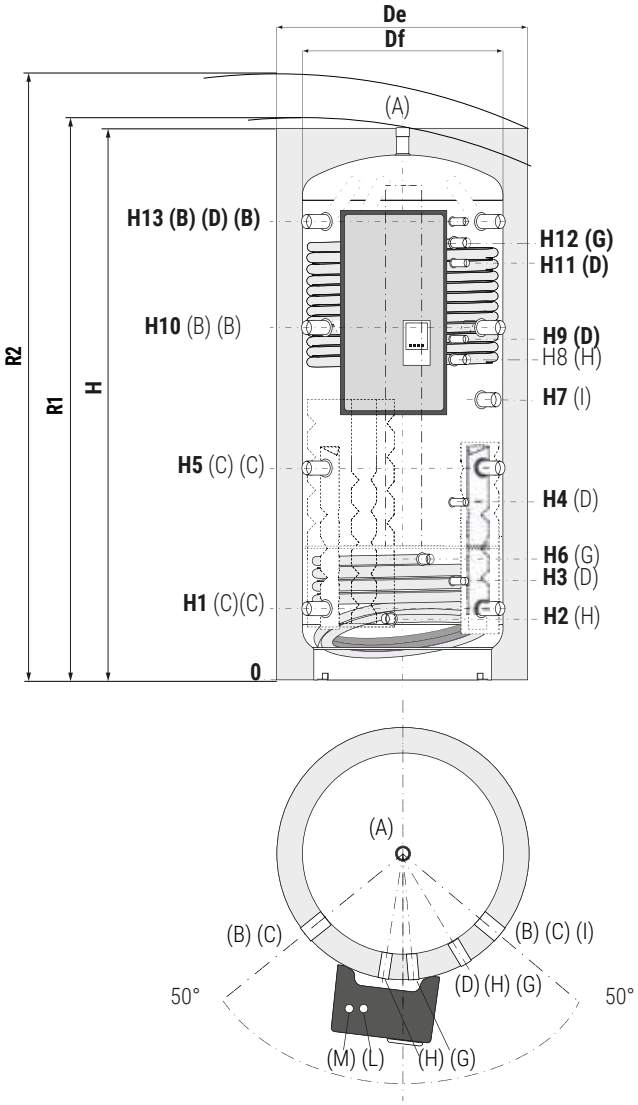

A	Heating delivery/from generator/Air purge G 1"1/2 F
B	Heating delivery/from generator G 1"1/2 F
C	Heating return/to generator G 1"1/2 F
D	Instrumentation G 1/2" F
G	Fixed heat exchanger inlet G 1" F
H	Fixed heat exchanger outlet G 1" F
I	Connection for electric immersion heater G 1"1/2 F
L	Domestic hot water outlet G 1" M
M	Domestic cold water circuit inlet G 1" M

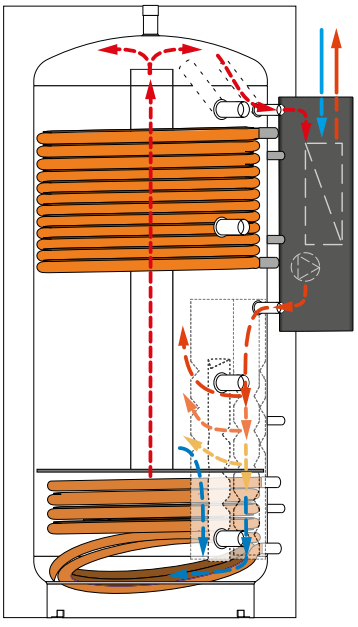

SUITABLE FOR SOLAR THERMAL SYSTEMS

THE ILLUSTRATION UNDERLINES THE STRATIFICATION PROCESS (FROM TOP TO BOTTOM) THAT ALLOWS TO HAVE ALL NEEDED ENERGY RAPIDLY AVAILABLE

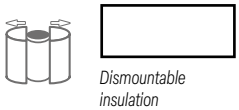

Dismountable insulation

Model	Volume	De	Df	H	R1	R2	H1	H2	H3	H4	H5	H6	H7	H8	H9	H10	H11	H12	H13
	[lt]	[mm]																	
800	805	940	790	1840	1880	2067	265	233	378	584	690	443	918	1003	1115	1115	1442	1347	1541
1000	946	940	790	2130	2165	2329	265	233	384	656	787	443	1145	1188	1388	1309	1588	1661	1831
1500	1454	1100	950	2250	//	2505	313	281	432	736	845	491	1236	1286	1396	1377	1783	1673	1909

Net volume data according to EN 15332 available on product label.

Products designed and manufactured for using within temperature and pressure limits in accordance to Art. 4.3 Directive 2014/68/EU (P.E.D.)



EXAMPLE OF INSTALLATION WITH **PUFFERMAS 1 PDC**

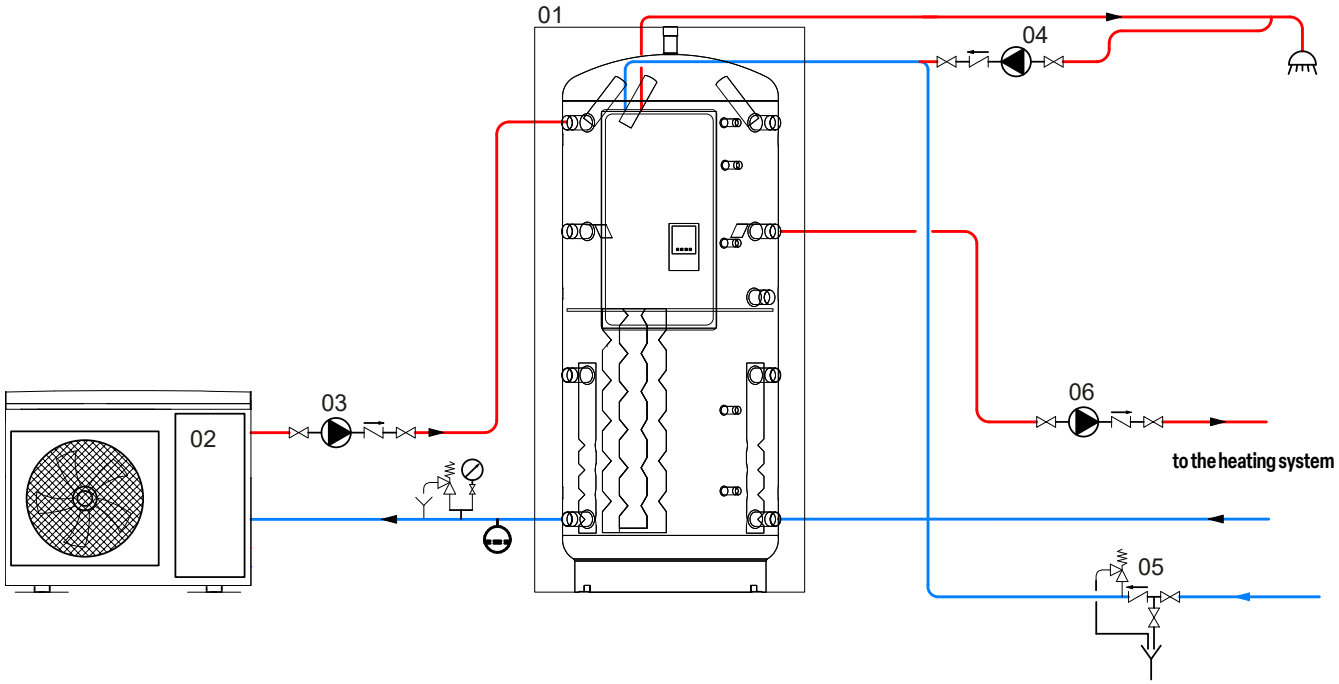

01	PUFFERMAS 1 PDC	03	Circulation group	05	Hydraulic safety group
02	Generator (Heat pump)	04	D.H.W. recirculation group	06	Heating system circulation group

EXAMPLE OF INSTALLATION WITH **PUFFERMAS 3 CTS PDC AND CHILLED WATER TANK**

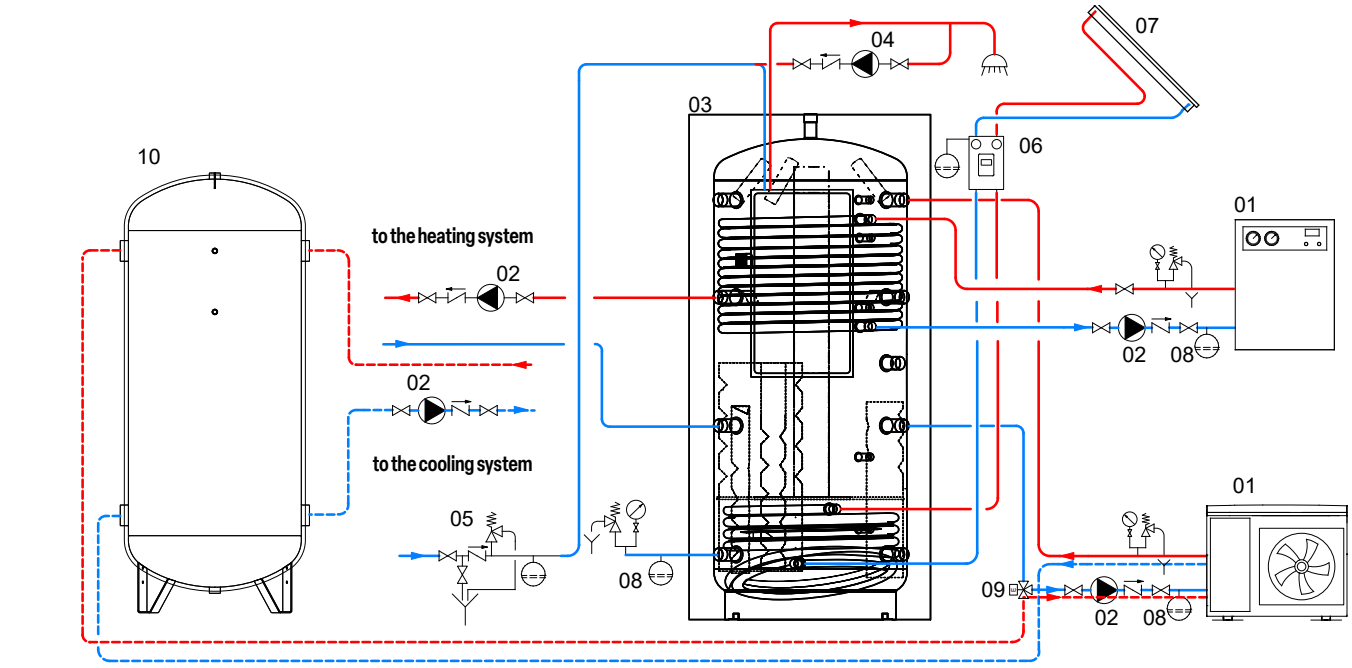

01	Generator	04	D.H.W. recirculation group	07	Solar panels	10	CHILLED WATER TANK
02	Circulation group	05	Hydraulic safety group	08	Expansion vessel		
03	PUFFERMAS 3 CTS PDC	06	Solar system circulation group	09	Electronic valve		

PUFFERMAS® 1 - 3 CTS PDC

MAXIMUM DHW FLOW RATE THAT CAN BE PRODUCED WITH COLD SANITARY WATER AT 10 °C





MACS® 180 HP MODULE FOR INSTANT PRODUCTION OF DHW
- 2-40 LITERS/MINUTE
- BRAZED PLATES EXCHANGER IN STAINLESS 316L
- STAINLESS DHW FITTINGS
- ELECTRONIC MANAGEMENT UNIT

ELECTRONIC MACS® 180 HP - TECHNICAL DATA CHART

The curves shown in these charts allow to obtain the DHW flow rate that can be produced by the individual MACS® module according to the storage / primary circuit temperature (value on the horizontal axis).
The curves are parameterized based on the desired DHW temperature and indicate the maximum DHW flow rate that can be produced at that temperature (with cold water inlet temperature at 10°C)
The MACS modules can produce all the DHW flow rates included in the area between the minimum activation flow rate and maximum flow curve of each temperature.

MACS® 180 HP

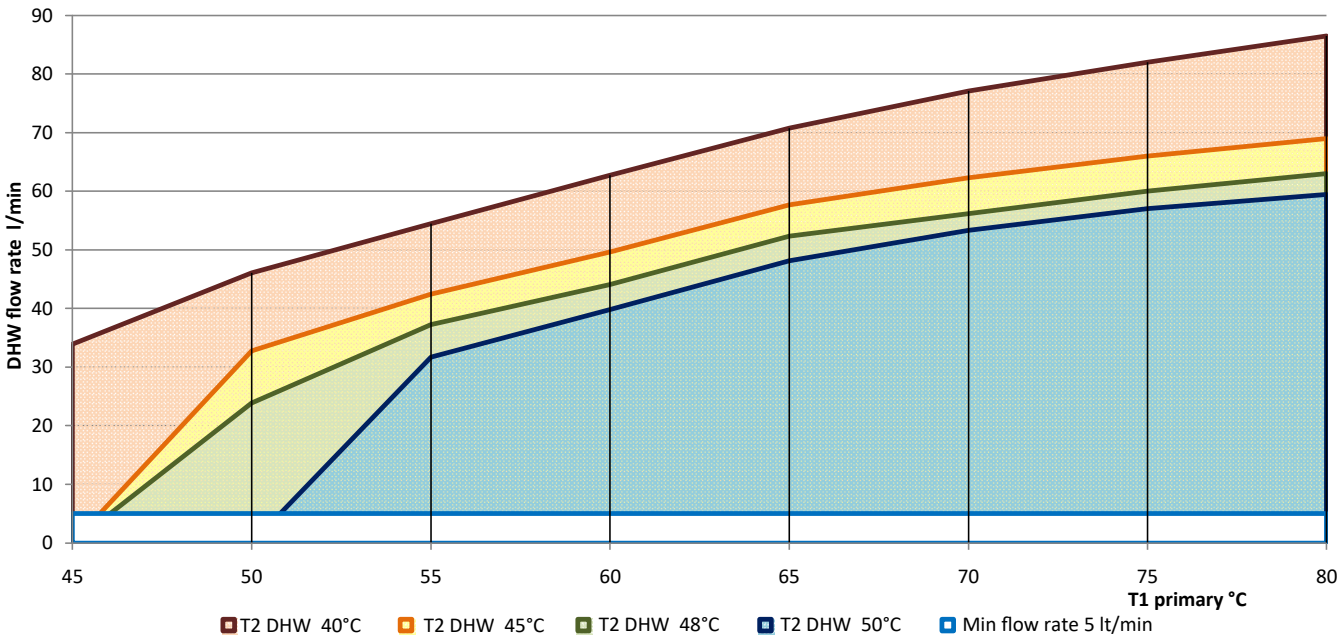

PUFFERMAS® 1 DOMUS

BUFFER TANK FOR HEAT PUMP WITH COMPACT DHW INSTANT PREPARATION UNIT



IMMEDIATE DHW PRODUCTION

APPLICATION
Storage by stratification of technical water and immediate production of domestic hot water (DHW) with high flow rates and performances.

MATERIAL
Mild steel painted on the outside. Buffer intented for closed circuit installation, so no anti-corrosion treatment is provided.

D.H.W. HEAT EXCHANGER
Integrated immediate DHW production module with Stainless steel 316L brazed plate heat exchanger.

TECHNICAL DESCRIPTION
Puffermas® 1 DOMUS combines the characteristic use of a buffer with those of a rapid DHW producer, without the accumulation of domestic hot water. The DHW heat exchanger module ensures excellent performances even at a low flow rate of domestic hot water.

INSULATION
THERMAL STORAGE: High thermal insulation with ecological polyurethane hard foam.
D.H.W. MODULE: insulating PST cover.
Grey PVC external lining.

WARRANTY
5 years (tank). See general sales conditions and warranty for electrical parts.

ACCESSORIES AND SPARE PARTS
See Accessories section for the entire list.





PUFFERMAS® 1 DOMUS VB
HARD FOAM INSULATION

Model	Art. Nr.	DHW module max/min flow rate [l/min]	ErP ENERGY EFFICIENCY CLASS
200	3251162314780	2/40	B
300	3251162314781	2/40	B

- ***Suitable for any type of heat generator; IDEAL FOR HEAT PUMPS***
- ***High exchange efficiency with high energy yield for D.H.W.***
- ***Optimized internal storage STRATIFICATION***
- ***MAXIMUM COMFORT with constant dhw temperature at any flow rate***
- ***High sensiblity and HIGH FLOW RATES (from 2 up to 40 lt/min)***
- ***MAXIMUM SAFETY and economicity***



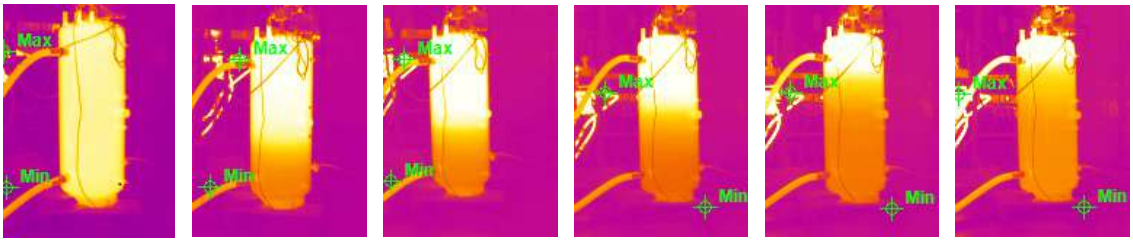

Series of thermographs that illustrate the perfect thermal stratification of the PUFFERMAS® DOMUS during the production of DHW through the integrated module

ACCESSORIES

Electric immersion heater



Available kit	
[Kw]	Tension [V]
from **1,5** to **3**	220 - MONOPHASE
See accessories	

Thermometer

Art. Nr.
5032240000107
5 units box



Recirculation kit

Art. Nr.
5221000000102
DHW recirculation group



Products designed and manufactured for using within temperature and pressure limits in accordance to Art. 4.3 Directive 2014/68/EU (P.E.D.)

PUFFERMAS® **1 DOMUS**

BUFFER TANK FOR HEAT PUMP WITH COMPACT DHW INSTANT PREPARATION UNIT

STORAGE		EXCHANGE MODULE	
Pmax	Tmax	Pmax	Tmax
4 bar	99 °C	8 bar	99 °C

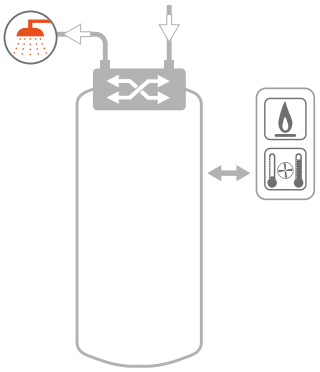

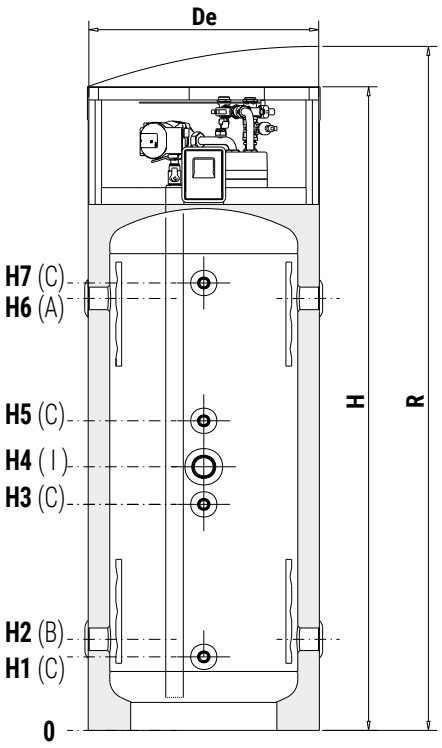

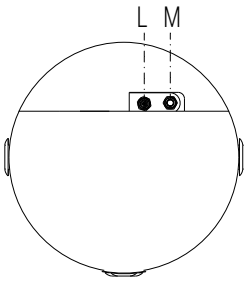

A	Heating delivery/from generator
B	Heating return/to generator
C	Instrumentation
I	Connection for electric immersion heater
L	Domestic hot water outlet
M	Domestic cold water circuit inlet

Model	Volume	De	H	R	H1	H2	H3	H4	H5	H6	H7	A-B-I	C	D-H-L-M
	[lt]	[mm]										Connections F		
200	180	550	1539	1650	176	218	541	631	741	1034	1071	1"1/2	1/2"	3/4"
300	278	650	1580	1720	190	232	555	645	755	1048	1085	1"1/2	1/2"	3/4"

Net volume data according to EN 15332 available on product label.

FLOW RATE PERFORMANCE OF DHW

The curves shown in these graphs allow to obtain the flow rate of domestic hot water (DHW) which can be produced by the integrated DHW production module, depending on the temperature of the storage tank / primary circuit (value on the horizontal axis).
The curves are parameterized based on the desired temperature of the DHW and indicate the maximum DHW flow rate that can be produced at that temperature (with inlet temperature at 10°C). The MACS Modules are able to produce all the DHW flow rates included in the area between the minimum activation flow rate and the maximum flow curve of each temperature.

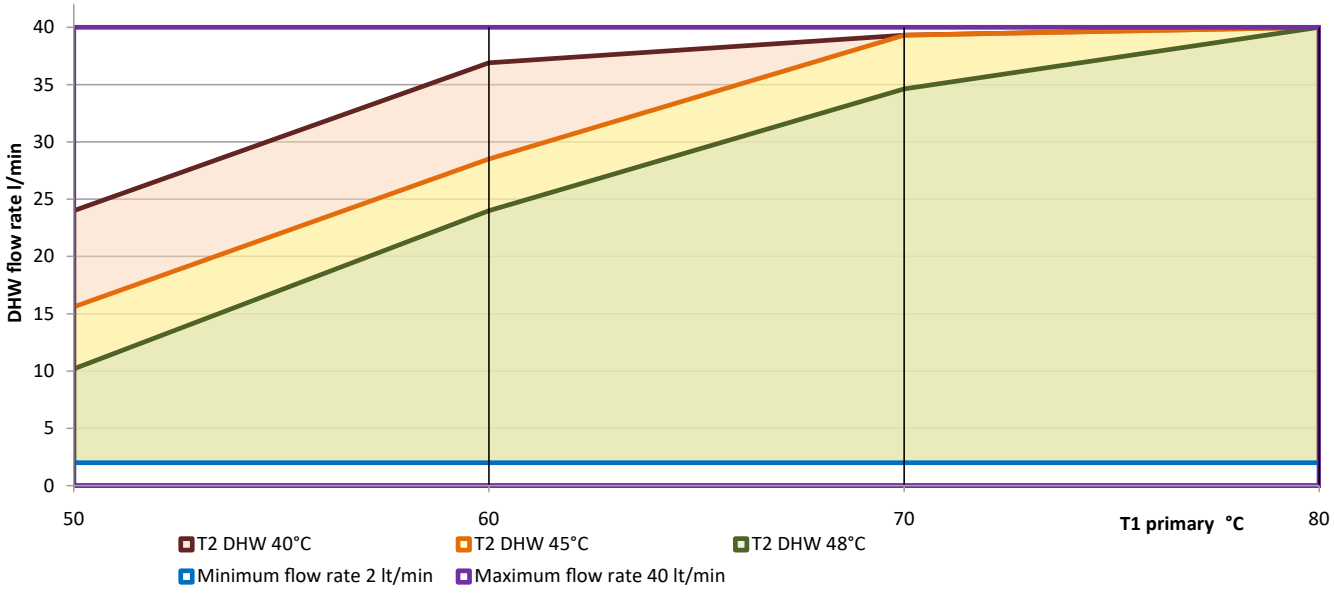

Products designed and manufactured for using within temperature and pressure limits in accordance to Art. 4.3 Directive 2014/68/EU (P.E.D.)

PUFFERMAS® **2 DOMUS**

BUFFER TANK FOR HEAT PUMP WITH COMPACT DHW INSTANT PREPARATION UNIT AND 1 FIXED HEAT EXCHANGER



IMMEDIATE DHW PRODUCTION

APPLICATION
Storage by stratification of technical water and immediate production of domestic hot water (DHW) with high flow rates and performances.

MATERIAL
Mild steel painted on the outside. Buffer intented for closed circuit installation, so no anti-corrosion treatment is provided.

DHW HEAT EXCHANGER MODULE
Integrated immediate DHW production module with stainless steel 316L brazed plate heat exchanger.

HEATING WATER HEAT EXCHANGER
The tank is equipped with 1 fixed heat exchanger in mild steel to allow the integration with a solar thermal system.

TECHNICAL DESCRIPTION
Puffermas® 2 DOMUS combines the characteristic use of a buffer with those of a rapid DHW producer, without the accumulation of domestic hot water. The DHW heat exchanger module ensures excellent performances even at a low flow rate of domestic hot water.

INSULATION
Thermal storage: High thermal insulation with ecological polyurethane hard foam.
Dhw module: insulating PST cover.
Grey PVC external lining.

WARRANTY
5 years (tank). See general sales conditions and warranty for electrical parts.

ACCESSORIES AND SPARE PARTS
See Accessories section for the entire list.

	Model	Art. Nr.	Heat exchangers surface	DHW module max/min flow rate	ErP
			[m²]	[l/min]	ENERGY EFFICIENCY CLASS
PUFFERMAS® 2 DOMUS VB HARD FOAM INSULATION	**200**	3251162314782	1,20	2/40	**B**
	300	3251162314783	1,40	2/40	**B**
	400	3251162314784	1,50	2/40	**C**

- ***Suitable for any type of heat generator; IDEAL FOR HEAT PUMPS***
- ***High exchange efficiency with high energy yield for D.H.W.***
- ***Optimized internal storage STRATIFICATION***
- ***MAXIMUM COMFORT with constant dhw temperature at any flow rate***
- ***High sensiblity and HIGH FLOW RATES (from 2 up to 40 lt/min)***
- ***MAXIMUM SAFETY and economicity***



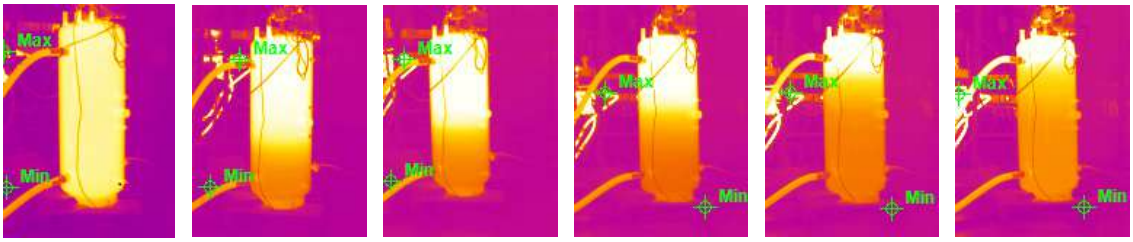

Series of thermographs that illustrate the perfect thermal stratification of the PUFFERMAS® DOMUS during the production of DHW through the integrated module

ACCESSORIES

Electric immersion heater



Available kit	
[Kw]	Tension [V]
from **1,5** to **3**	220 - MONOPHASE
See accessories	

Thermometer

Art. Nr.
5032240000107
5 units box



Recirculation kit

Art. Nr.
5221000000102
DHW recirculation group



Products designed and manufactured for using within temperature and pressure limits in accordance to Art. 4.3 Directive 2014/68/EU (P.E.D.)

PUFFERMAS® **2 DOMUS**

BUFFER TANK FOR HEAT PUMP WITH COMPACT DHW INSTANT PREPARATION UNIT AND 1 FIXED HEAT EXCHANGER

STORAGE		EXCHANGE MODULE		FIXED HEAT EXCHANGER	
Pmax	Tmax	Pmax	Tmax	Pmax	Tmax
4 bar	99 °C	8 bar	99 °C	12 bar	110 °C

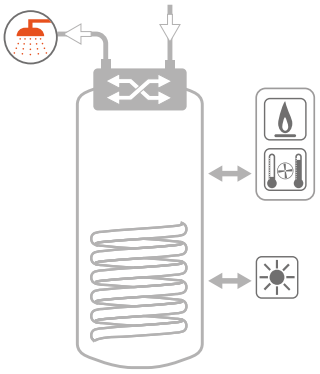

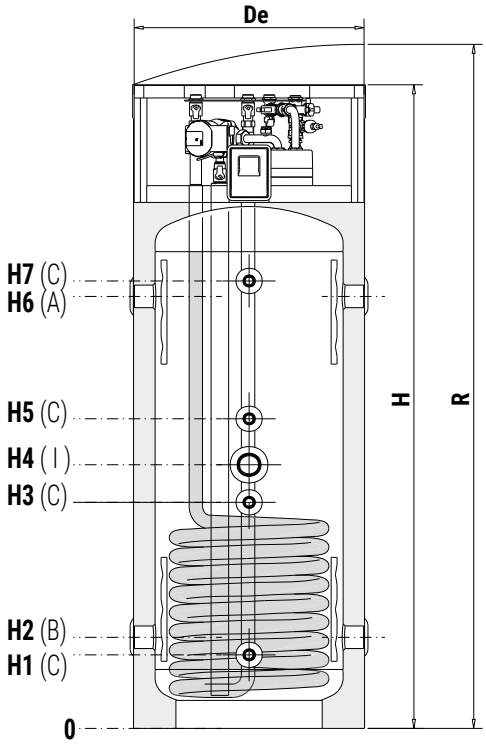

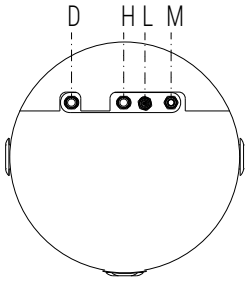

A	Heating delivery/from generator
B	Heating return/to generator
C	Instrumentation
D	Fixed heat exchanger inlet
H	Fixed heat exchanger outlet
I	Connection for electric immersion heater
L	Domestic hot water outlet
M	Domestic cold water circuit inlet

Model	Volume	De	H	R	H1	H2	H3	H4	H5	H6	H7	A-B-I	C	D-H-L-M
	[lt]	[mm]										Connections F		
200	180	550	1539	1650	176	218	541	631	741	1034	1071	1"1/2	1/2"	3/4"
300	278	650	1580	1720	190	232	555	645	755	1048	1085	1"1/2	1/2"	3/4"
400	364	650	2000	2110	190	232	955	1045	1155	1468	1505	1"1/2	1/2"	3/4"

Net volume data according to EN 15332 available on product label.

FLOW RATE PERFORMANCE OF DHW

The curves shown in these graphs allow to obtain the flow rate of domestic hot water (DHW) which can be produced by the integrated DHW production module, depending on the temperature of the storage tank / primary circuit (value on the horizontal axis).
The curves are parameterized based on the desired temperature of the DHW and indicate the maximum DHW flow rate that can be produced at that temperature (with inlet temperature at 10°C). The MACS Modules are able to produce all the DHW flow rates included in the area between the minimum activation flow rate and the maximum flow curve of each temperature.

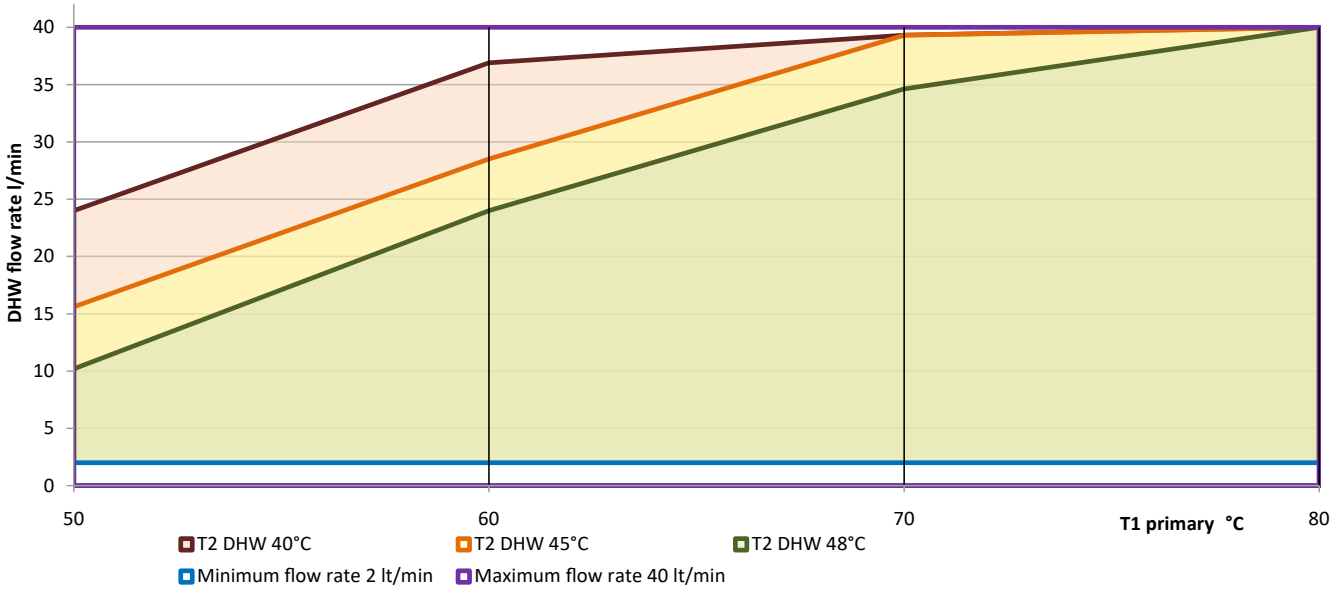

Products designed and manufactured for using within temperature and pressure limits in accordance to Art. 4.3 Directive 2014/68/EU (P.E.D.)

PUFFERMAS® **2 DOMUS**

PERFORMANCE DURING DHW PRODUCTION PHASE



DHW WITHDRAWAL 255 lt T>40 °C 61% of the accumulated energy

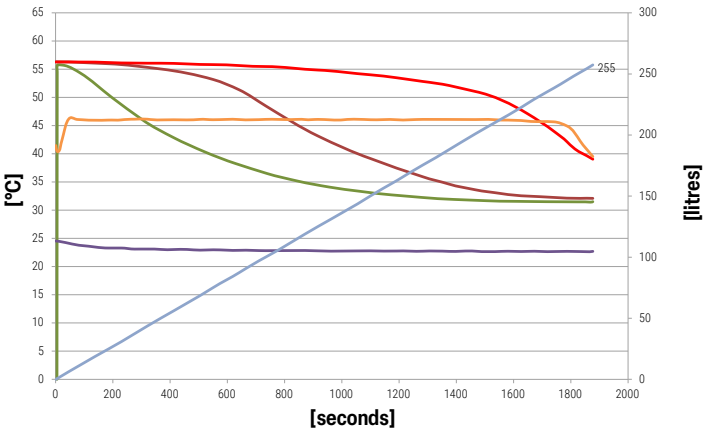

STORAGE: 55 °C
WITHDRAWAL: 45-39 °C
FLOW RATE: **8 l/min**

PUFFERMAS® 2 DOMUS
Model 300



DHW WITHDRAWAL 257 lt T>40 °C 58% of the accumulated energy

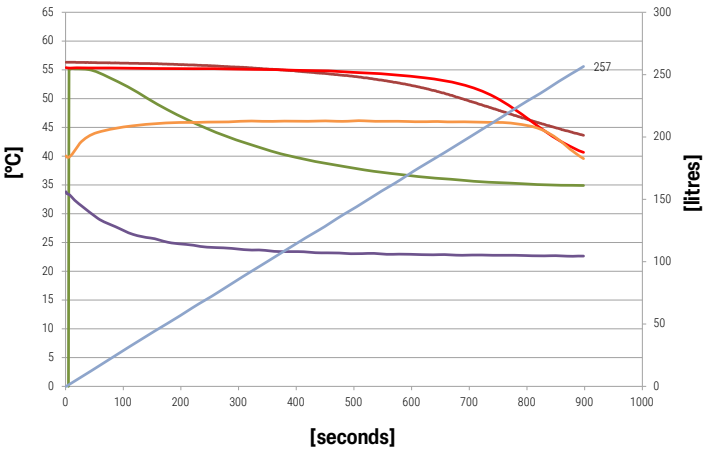

STORAGE: 55 °C
WITHDRAWAL: 45-39 °C
FLOW RATE: **16 l/min**

DHW WITHDRAWAL 179 lt T>40 °C 60% of the accumulated energy

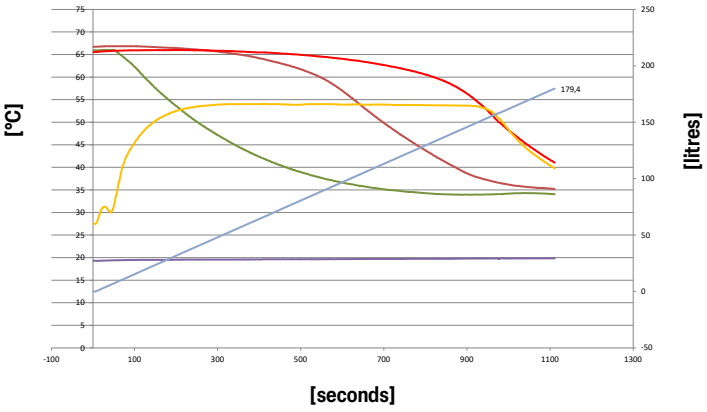

STORAGE: 65 °C
WITHDRAWAL: 55-40 °C
FLOW RATE: **10 l/min**

PUFFERMAS® 2 DOMUS
Model 200



DHW WITHDRAWAL 192 lt T>40 °C 58% of the accumulated energy

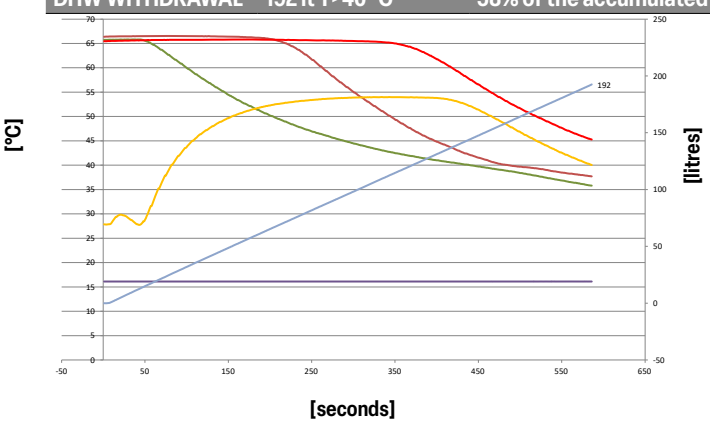

STORAGE: 65 °C
WITHDRAWAL: 55-40 °C
FLOW RATE: **20 l/min**

PUFFERMAS® **DOMUS**



EXAMPLE OF INSTALLATION WITH **PUFFERMAS® 1 DOMUS**

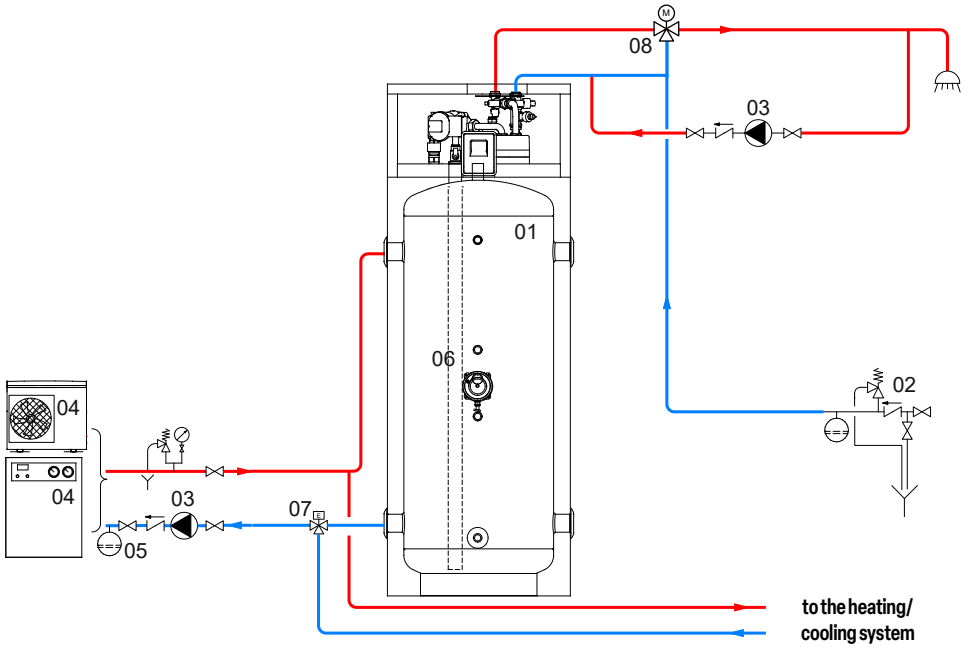

1	PUFFERMAS® 1 DOMUS	4	Generator	7	3-way valve
2	Hydraulic safety group	5	Expansion vessel	8	Thermostatic mixing valve
3	Circulation group	6	Electric immersion heater (optional)		

EXAMPLE OF INSTALLATION WITH **PUFFERMAS® 2 DOMUS**

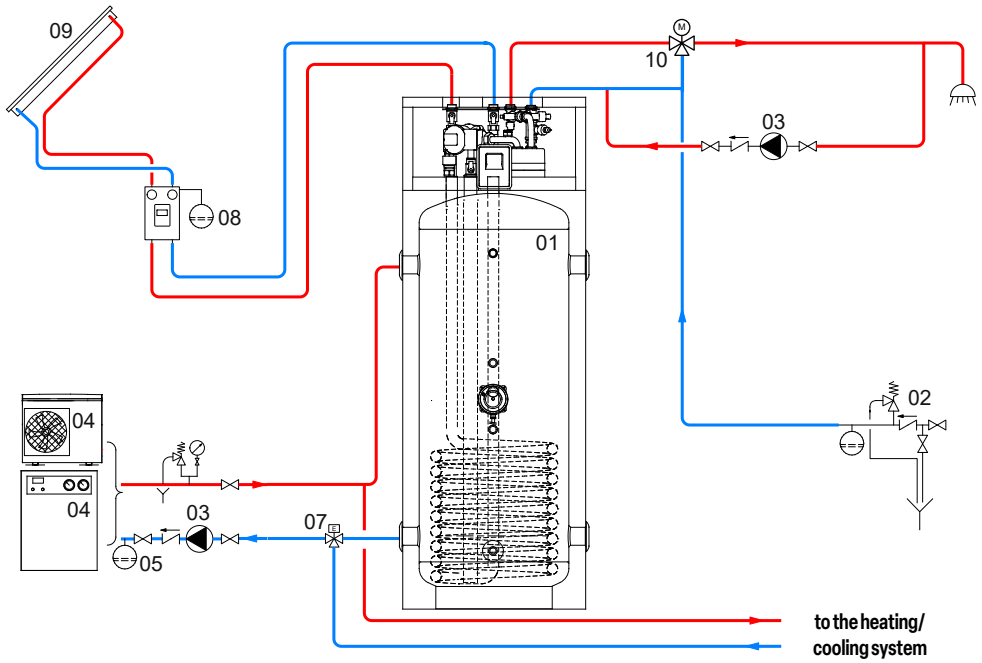

1	PUFFERMAS® 2 DOMUS	4	Generator	7	3-way valve	10	Thermostatic mixing valve
2	Hydraulic safety group	5	Expansion vessel	8	Solar system circulation group		
3	Circulation group	6	Electric immersion heater (optional)	9	Solar panels		

The following schemes are purely illustrative. To realize the installation, always refer to a qualified technician.

ECO COMBI **1 PDC**

MULTI-HEAT ENERGY BUFFER FOR HEAT PUMP WITH STAINLESS STEEL 316L DHW CORRUGATED COIL



316L STAINLESS STEEL D.H.W. CORRUGATED COIL

APPLICATION
Technical hot water storage and D.H.W. production.

MATERIAL
Mild steel painted on the outside. Buffer intented for closed circuit installation, so no anti-corrosion treatment is provided.
Stainless steel 316L corrugated coil, suitable for D.H.W.

TECHNICAL DESCRIPTION
Designed for systems powered by heat pump heat source. ECO COMBI 1 PDC, at the typical temperatures of heat pumps, guarantees excellent DHW production thanks to the specially designed and dimensioned corrugated stainless steel 316L heat exchanger.

INSULATION
HARD: High thermal insulation with ecological polyurethane hard foam. Model 800 available with dismountable hard foam insulation.
SOFT (DISMOUNTABLE): NOFIRE® polyester fleece 100% made of recyclable material, with high thermal insulation. Fire resistance class B-s2d0 according to EN 13501.
Grey PVC external lining.

WARRANTY
5 years (See general sales conditions and warranty)

ACCESSORIES AND SPARE PARTS
See Accessories section for the entire list.

		Model	Art. Nr.	Heat pump max output	316L stainless steel corrugated coil for D.H.W. production		ErP ENERGY EFFICIENCY CLASS
					Volume	Surface	
				[kW]	[lt]	[m²]	
	 **ECO COMBI 1 PDC VB** HARD FOAM INSULATION	**300**	3270162310002	26	26,6	4,5	**B**
		500	3270162310003	26	31	5,3	**C**
	 **ECO COMBI 1 PDC VB** HARD FOAM INSULATION	**800**	3270162282267	35	45	7,7	**B**
	 **ECO COMBI 1 PDC VC** DISMOUNTABLE SOFT FLEECE INSULATION	**800**	3270162282268	35	45	7,7	**B**

ACCESSORIES

Thermometer

Art. Nr.	
5032240000107	
5 units box	

Recirculation kit (only for models ≥ 500)

Art. Nr.	
5221000000019	
Connection 3/4"	

Products designed and manufactured for using within temperature and pressure limits in accordance to Art. 4.3 Directive 2014/68/EU (P.E.D.)

ECO COMBI **1 PDC**

MULTI-HEAT ENERGY BUFFER FOR HEAT PUMP WITH STAINLESS STEEL 316L DHW CORRUGATED COIL

STORAGE		CORRUGATED DHW STAINLESS STEEL 316L COIL
Pmax	Tmax	Pmax
4 bar	99 °C	6 bar

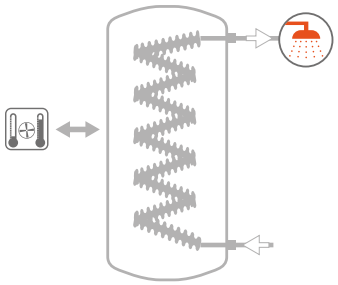

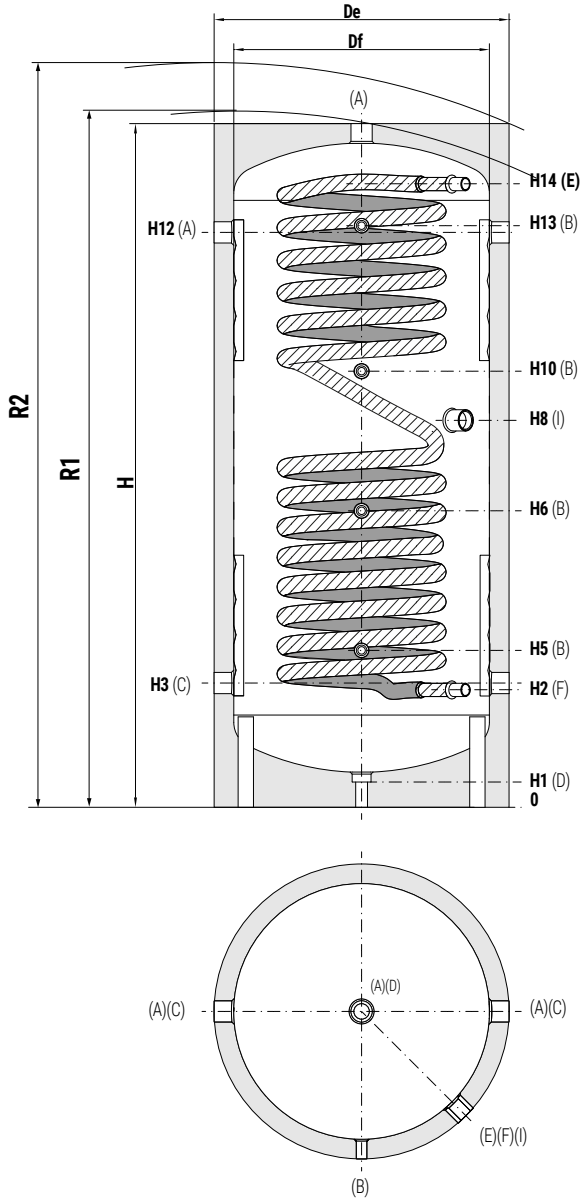

A	From generator - Heating delivery G 1"1/2 F
B	Instrumentation G 1/2" F
C	Heating return - to generator G 1"1/2 F
D	Drain G 1"1/4 F
E	Domestic hot water circuit outlet
F	Domestic water inlet
I	Electric immersion heater G 1"1/2 F

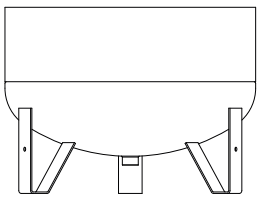

only for model 800



Dismountable insulation

ECO COMBI 1 PDC VB - HARD FOAM INSULATION

Model	Volume	Df	De	H	R1	R2	H1	H2	H3	H5	H6	H8	H10	H12	H13	H14	E-F
	[lt]	[mm]															Connections
300	291	-	650	1585	-	1713	70	297	330	390	745	970	1100	1280	1315	1415	1/2" F
500	454	-	750	1745	-	1899	70	305	322	405	760	990	1115	1468	1485	1585	1" M
800	748	790	940	1940	2030	2156	70	325	342	425	780	935	1135	1618	1635	1735	1" M

Net volume data according to EN 15332 available on product label.

ECO COMBI 1 PDC VC - DISMOUNTABLE SOFT FLEECE INSULATION

Model	Volume	Df	De	H	R1	R2	H1	H2	H3	H5	H6	H8	H10	H12	H13	H14	E-F
	[lt]	[mm]															Connections
800	748	790	1010	1940	2030	2190	70	325	342	425	780	935	1135	1618	1635	1735	1" M

Net volume data according to EN 15332 available on product label.

Products designed and manufactured for using within temperature and pressure limits in accordance to Art. 4.3 Directive 2014/68/EU (P.E.D.)

ECO COMBI **3 PDC**

MULTI-HEAT ENERGY BUFFER FOR HEAT PUMP WITH STAINLESS STEEL 316L DHW CORRUGATED COIL AND 2 FIXED HEAT EXCHANGERS



316L STAINLESS STEEL DH.W. CORRUGATED COIL

APPLICATION
Technical hot water storage and D.H.W. production.

MATERIAL
Mild steel painted on the outside. Buffer intented for closed circuit installation, so no anti-corrosion treatment is provided.
Stainless steel 316L corrugated coil, suitable for D.H.W.

HEAT EXCHANGER:
2 fixed heat exchangers in mild steel.

TECHNICAL DESCRIPTION
Designed for systems powered by heat pump heat source, with the possibility of integrating two additional heat generators (for example solar and boiler). ECO COMBI 3 PDC, at the typical temperatures of heat pumps, guarantees excellent DHW production thanks to the specially designed and dimensioned corrugated stainless steel 316L heat exchanger.

INSULATION
HARD: High thermal insulation with ecological polyurethane hard foam. Model 800 available with dismountable hard foam insulation.
SOFT (DISMOUNTABLE): NOFIRE® polyester fleece 100% made of recyclable material, with high thermal insulation. Fire resistance class B-s2d0 according to EN 13501. Grey PVC external lining.

WARRANTY
5 years (See general sales conditions and warranty)

ACCESSORIES AND SPARE PARTS
See Accessories section for the entire list.

	Model	Art. Nr.	Heat pump max output	316L stainless steel corrugated coil for D.H.W. production		Upper heat exchanger		Lower heat exchanger		ErP
				Volume	Surface	Volume	Surface	Volume	Surface	ENERGY EFFICIENCY CLASS
			[kW]	[lt]	[m²]	[lt]	[m²]	[lt]	[m²]	
ECO COMBI 3 PDC VB HARD FOAM INSULATION	**300**	3270162310202	26	26,6	4,5	4,4	0,7	7,9	1,2	**B**
	500	3270162310203	26	31	5,3	7,7	1,2	14,5	2,2	**C**
ECO COMBI 3 PDC VB DISMOUNTABLE HARD FOAM INSULATION	**800**	3270162282287	35	45	7,7	11,3	1,7	16,9	2,6	**B**
ECO COMBI 3 PDC VC DISMOUNTABLE SOFT FLEECE INSULATION	**800**	3270162282288	35	45	7,7	11,3	1,7	16,9	2,6	**B**

ACCESSORIES

Thermometer

Art. Nr.
5032240000107
5 units box



Recirculation kit (only for models ≥ 500)

Art. Nr.
5221000000019
Connection 3/4"



Products designed and manufactured for using within temperature and pressure limits in accordance to Art. 4.3 Directive 2014/68/EU (P.E.D.)

ECO COMBI **3 PDC**

MULTI-HEAT ENERGY BUFFER FOR HEAT PUMP WITH STAINLESS STEEL 316L DHW CORRUGATED COIL AND 2 FIXED HEAT EXCHANGERS

STORAGE		CORRUGATED DHW STAINLESS STEEL 316L COIL	FIXED HEAT EXCHANGER	
Pmax	Tmax	Pmax	Pmax	Tmax
4 bar	99 °C	6 bar	12 bar	110 °C

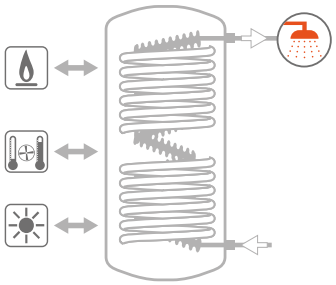

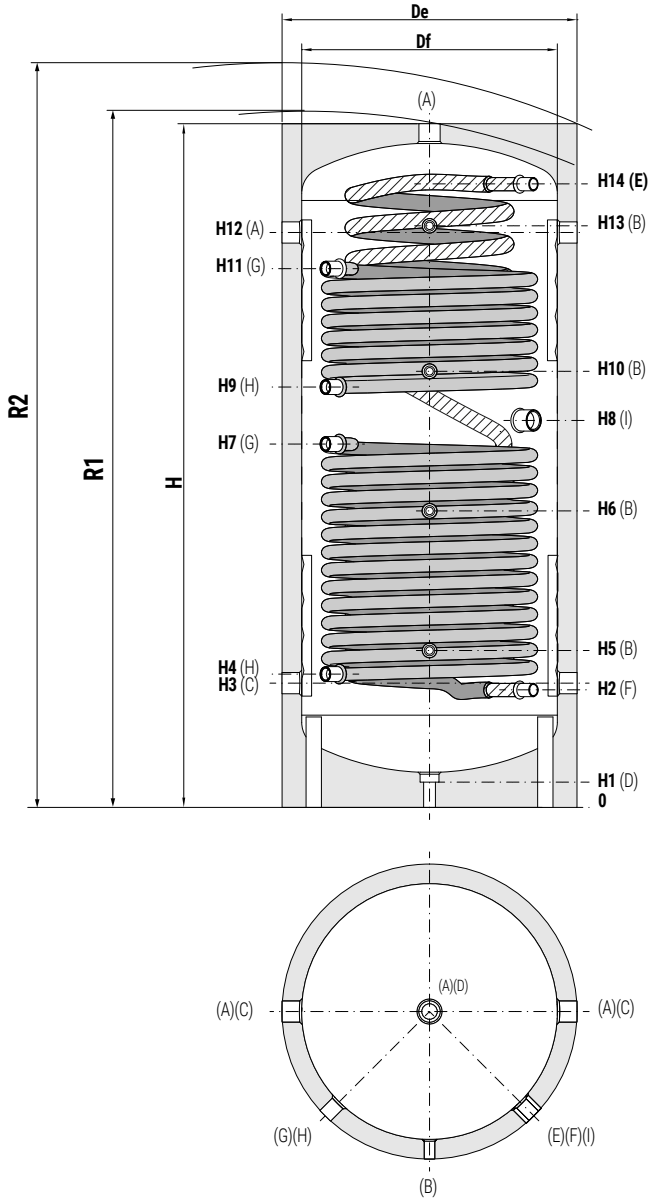

A	From generator - Heating delivery G 1"1/2 F
B	Instrumentation G 1/2" F
C	Heating return - to generator G 1"1/2 F
D	Drain G 1"1/4 F
E	Domestic hot water circuit outlet
F	Domestic water inlet
G	Fixed heat exchanger inlet G 1" F
H	Fixed heat exchanger outlet G 1" F
I	Electric immersion heater G 1"1/2 F

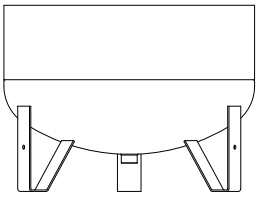

only for model 800



Dismountable insulation

ECO COMBI 3 PDC VB - HARD FOAM INSULATION

Model	Volume	Df	De	H	R1	R2	H1	H2	H3	H4	H5	H6	H7	H8	H9	H10	H11	H12	H13	H14	E-F
	[lt]	[mm]																			Connections
300	291	-	650	1585	-	1713	70	297	330	330	390	745	870	970	1040	1100	1280	1280	1315	1415	1/2" F
500	454	-	750	1745	-	1899	70	305	322	345	405	760	930	990	1075	1115	1376	1468	1485	1585	1" M
800	748	790	940	1940	2030	2156	70	325	342	365	425	780	905	935	1065	1135	1409	1618	1635	1735	1" M

Net volume data according to EN 15332 available on product label.

ECO COMBI 3 PDC VC - DISMOUNTABLE SOFT FLEECE INSULATION

Model	Volume	Df	De	H	R1	R2	H1	H2	H3	H4	H5	H6	H7	H8	H9	H10	H11	H12	H13	H14	E-F
	[lt]	[mm]																			Connections
800	748	790	1010	1940	2030	2190	70	325	342	365	425	780	905	935	1065	1135	1409	1618	1635	1735	1" M

Net volume data according to EN 15332 available on product label.

Products designed and manufactured for using within temperature and pressure limits in accordance to Art. 4.3 Directive 2014/68/EU (P.E.D.)



EcoCombi PDC exchanged power according to average Delta T between primary and storage (flow rate of 3 m³/h circulating in the exchanger)

Exchangeable thermal powers are expressed both in kW and Kcal/h according to the average temperature difference between primary and secondary, having a primary flow rate of 3 m³/h.

UPPER HEAT EXCHANGER

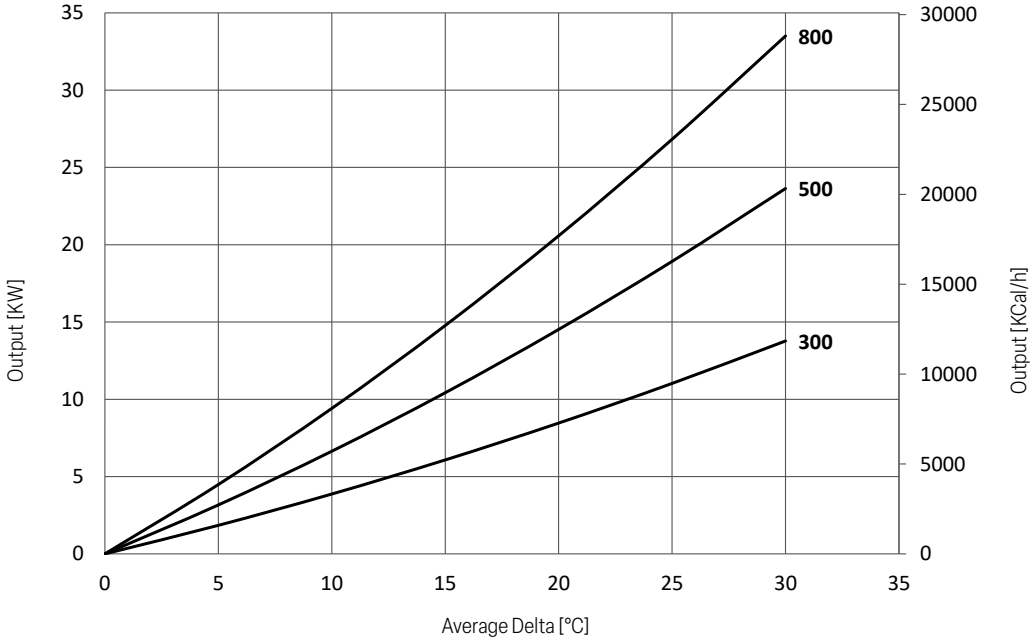

LOWER HEAT EXCHANGER

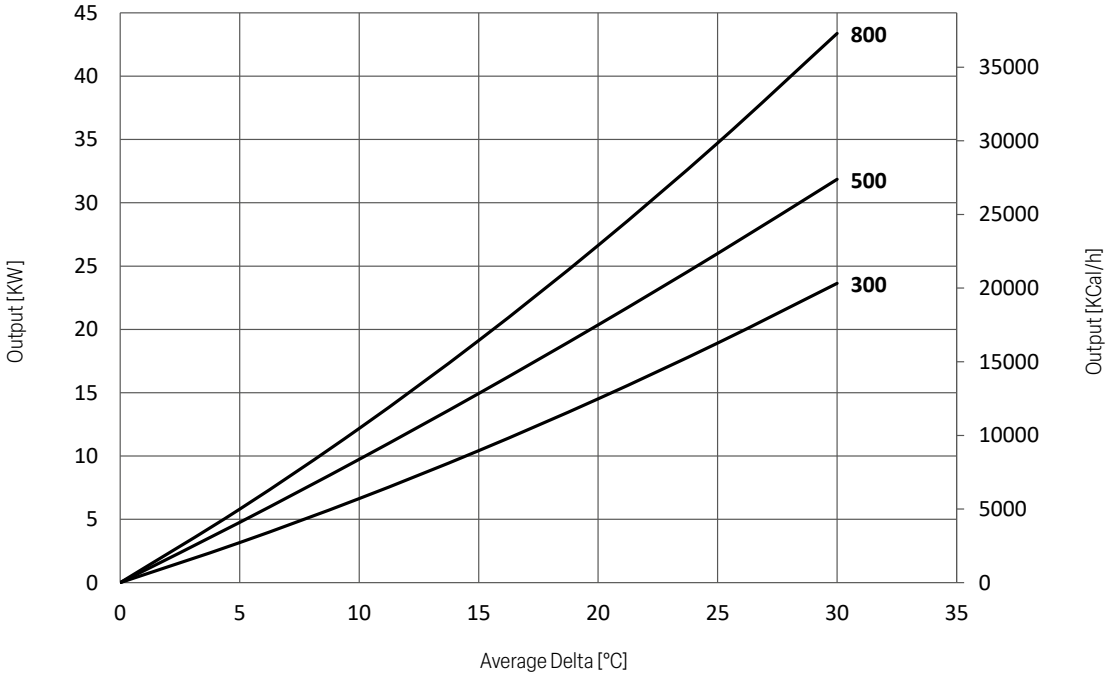



UPPER HEAT EXCHANGER

Upper heat exchangers surface [m²]	
300	0,7
500	1,2
800	1,7

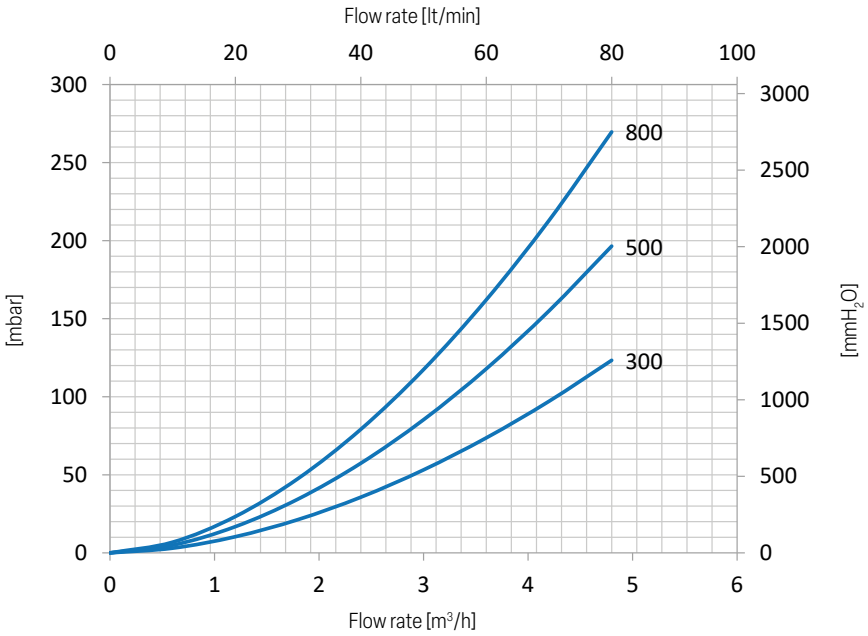

LOWER HEAT EXCHANGER

Lower heat exchangers surface [m²]	
300	1,2
500	2,2
800	2,6

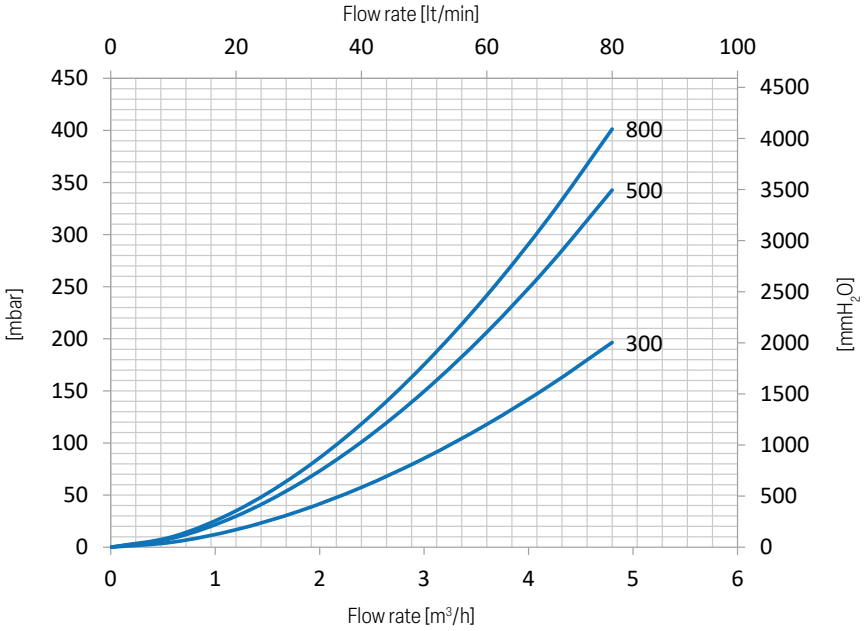



DHW IN LITERS, WHICH CAN BE WITHDRAWN STARTING FROM HOT ACCUMULATION AT THE TEMPERATURE AND FLOW RATES CONDITIONS INDICATED BELOW

Model	Buffer storage 55 °C - DHW 10/45°C			Buffer storage 55 °C - DHW 15/42°C		
	DHW withdrawal flow rate [lt/min]			DHW withdrawal flow rate [lt/min]		
	8	16	24	8	16	24
300	125	77	//	193	131	//
500	216	151	128	331	246	217
800	357	249	212	546	405	358

BELOW charts refer to the model
ECO COMBI 1 PDC - 300

DHW WITHDRAWAL 256 lt T>40 °C 58% of the accumulated energy

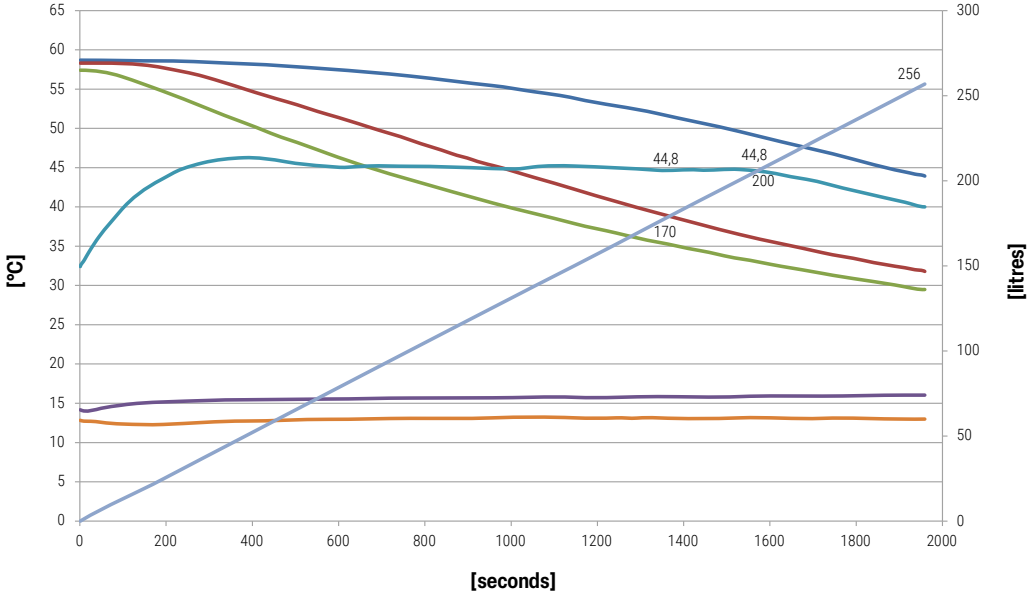

STORAGE: 58 °C
WITHDRAWAL: 45-40 °C
FLOW RATE: **8 l/min**

T1
T2
T3
Tin DHW
Tout DHW
Ta
total liters

DHW WITHDRAWAL 213 lt T>40 °C 47% of the accumulated energy

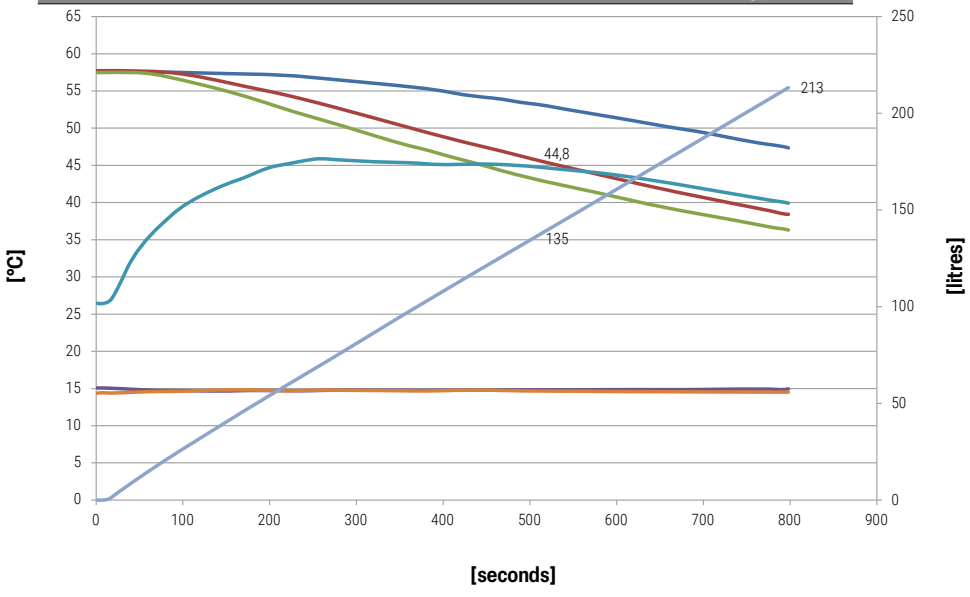

STORAGE: 57,5 °C
WITHDRAWAL: 45-40 °C
FLOW RATE: **16 l/min**

T1
T2
T3
Tin DHW
Tout DHW
Ta
total liters



EXAMPLE OF INSTALLATION WITH **ECO-COMBI 1 PDC**

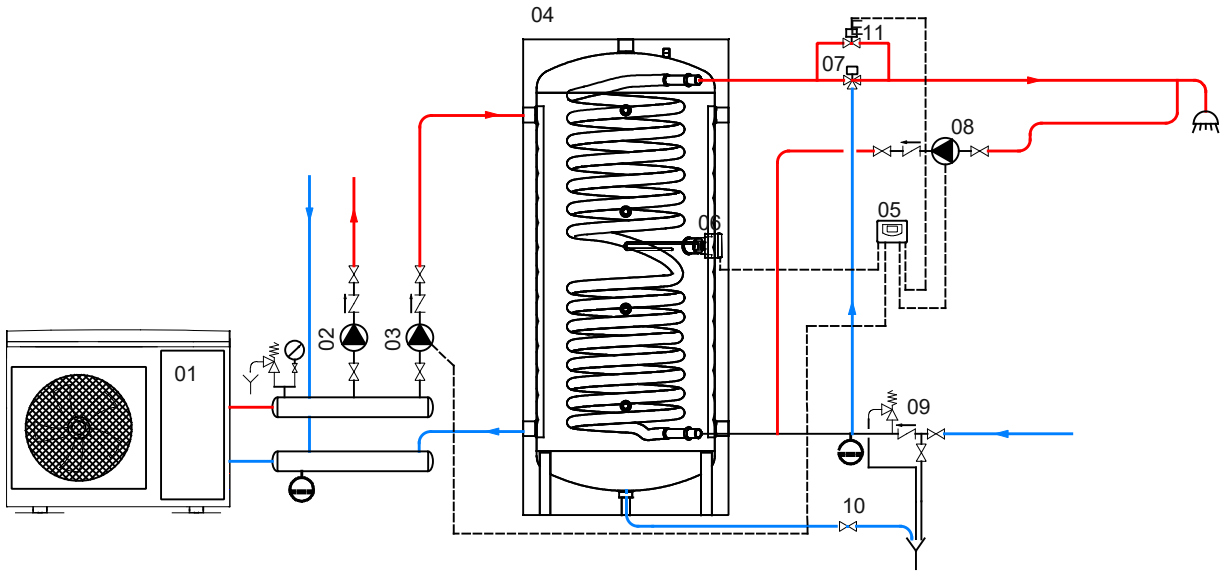

01	Generator (Heat pump)	04	ECO COMBI 1 PDC	07	Thermostatic mixing valve	10	Blowdown valve
02	Heating system circulation group	05	FULL CONTROL electronic unit / thermostat	08	D.H.W. recirculation group	11	By-pass solenoid valve
03	D.H.W. circulation group	06	Electric immersion heater (optional)	09	Hydraulic safety group		

EXAMPLE OF INSTALLATION WITH **ECO-COMBI 3 PDC**

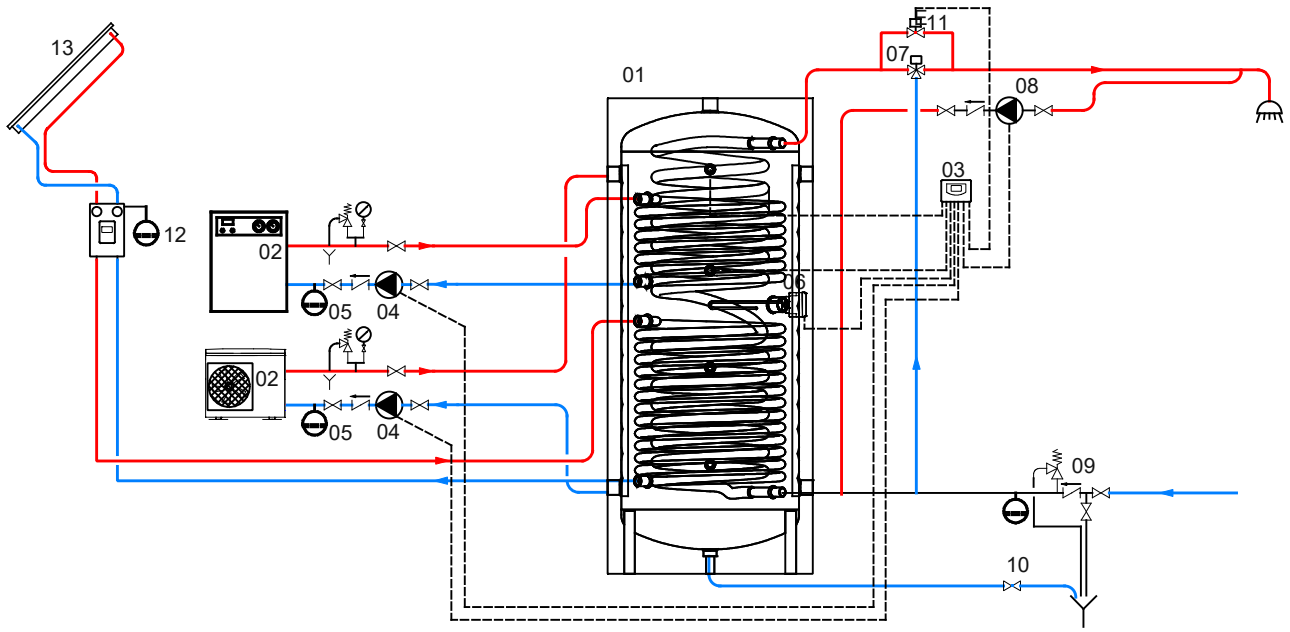

01	ECO COMBI 3 PDC	05	Expansion vessel	09	Hydraulic safety group	13	Solar panels
02	Generator	06	Electric immersion heater (optional)	10	Blowdown valve		
03	FULL CONTROL electronic unit / thermostat	07	Thermostatic mixing valve	11	By-pass solenoid valve		
04	Circulation group	08	D.H.W. recirculation group	12	Solar system circulation group		

The following schemes are purely illustrative. To realize the installation, always refer to a qualified technician.

ECO COMBI **1 PDC HY**

MULTI-HEAT ENERGY BUFFER FOR HEAT PUMP WITH STAINLESS STEEL 316L DHW CORRUGATED COIL AND INTEGRATED BUFFER TANK SPECIFIC FOR HEAT PUMPS



316L STAINLESS STEEL DH.W. CORRUGATED COIL

APPLICATION
Technical hot water storage and D.H.W. production. Heating/cooling buffer tank for heat pumps.

MATERIAL
- ***BUFFER TANK:*** Mild steel painted on the outside. Buffer intented for closed circuit installation, so no anti-corrosion treatment is provided.
- ***DHW STORAGE:*** Stainless steel 316L corrugated coil, suitable for D.H.W.
- ***ENERGY BUFFER hot-cold:*** mild steel.

TECHNICAL DESCRIPTION
Designed for systems powered by heat pump heat source. ECO COMBI 1 PDC, at the typical temperatures of heat pumps, guarantees excellent DHW production thanks to the specially designed and dimensioned corrugated stainless steel 316L heat exchanger.

INSULATION
High thermal insulation with ecological polyurethane hard foam. Grey PVC external lining.

WARRANTY
5 years (See general sales conditions and warranty)

ACCESSORIES AND SPARE PARTS
See Accessories section for the entire list.

	Model	Art. Nr.	Heat pump max output	316L stainless steel corrugated coil for D.H.W. production		ErP ENERGY EFFICIENCY CLASS
				Volume	Surface	
			[kW]	[lt]	[m²]	
ECO COMBI 1 PDC HY VB HARD FOAM INSULATION	**300**	3270162310006	26	26,6	4,5	**C**
	500	3270162310007	26	31	5,3	**C**

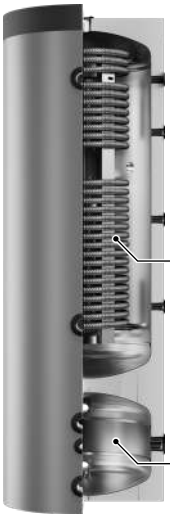

ACCESSORIES

Thermometer

Art. Nr.
5032240000107
5 units box



Recirculation kit (only for models ≥ 500)

Art. Nr.
5221000000019
Connection 3/4"



Products designed and manufactured for using within temperature and pressure limits in accordance to Art. 4.3 Directive 2014/68/EU (P.E.D.)

ECO COMBI **1 PDC HY**

MULTI-HEAT ENERGY BUFFER FOR HEAT PUMP WITH STAINLESS STEEL 316L DHW CORRUGATED COIL AND INTEGRATED BUFFER TANK SPECIFIC FOR HEAT PUMPS

STORAGE		CORRUGATED DHW STAINLESS STEEL 316L COIL	BUFFER TANK	
Pmax	Tmax	Pmax	Pmax	Tmax
4 bar	99 °C	6 bar	4 bar	-10/+95 °C

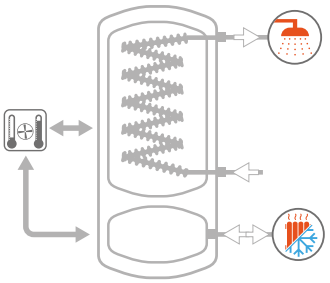

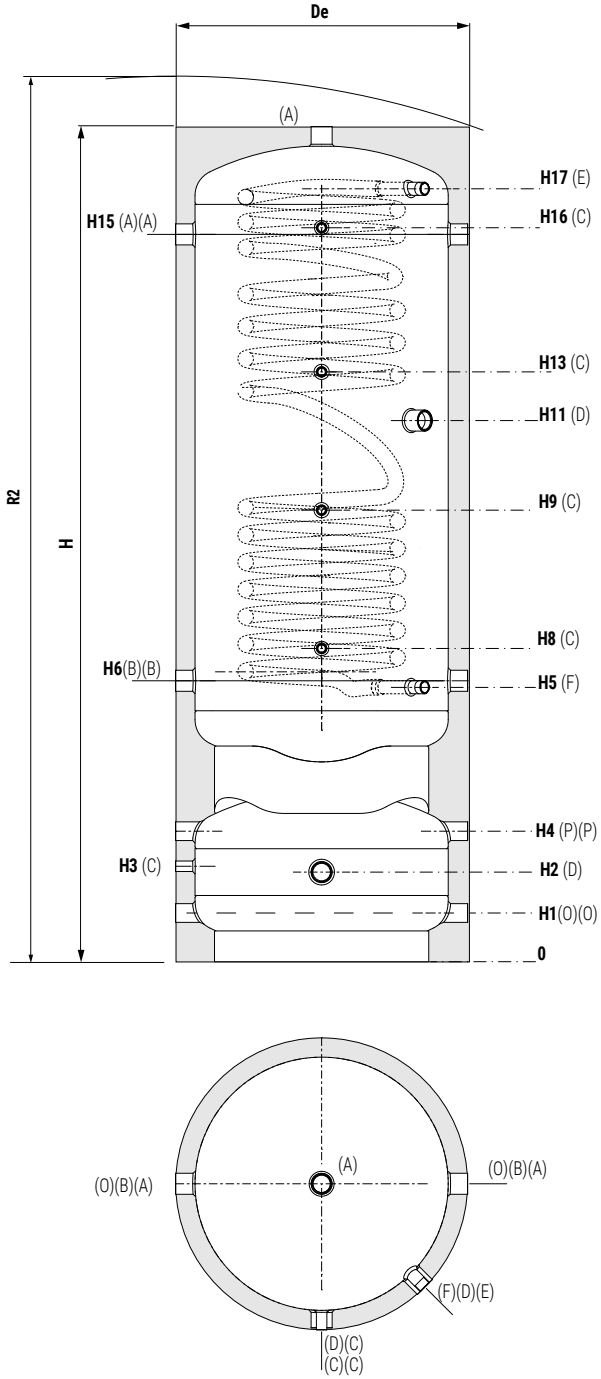

A	From generator - Heating delivery G 1"1/2 F
B	Heating return - to generator G 1"1/2 F
C	Instrumentation G 1/2" F
D	Electric immersion heater G 1"1/2 F
E	Domestic hot water circuit outlet
F	Domestic water inlet
O	Heating return - to generator G 1"1/4 F
P	From generator - Heating delivery G 1"1/4 F

Model	Volume	Buffer tank volume	De	H	R2	H1	H2	H3	H4	H5	H6
	[lt]		[mm]								
300	291	81	650	1965	2080	110	232	264	354	697	730
500	454	108	750	2145	2280	125	230	245	335	704	721

Model	H7	H8	H9	H10	H11	H12	H13	H14	H15	H16	H17	E-F
	[mm]											Connections F
300	//	790	1145	//	1370	//	1500	//	1680	1715	1815	1/2" M.
500	//	804	1159	//	1389	//	1514	//	1867	1884	1984	1" M

Net volume data according to EN 15332 available on product label.

Products designed and manufactured for using within temperature and pressure limits in accordance to Art. 4.3 Directive 2014/68/EU (P.E.D.)

ECO COMBI **3 PDC HY**

MULTI-HEAT ENERGY BUFFER FOR HEAT PUMP WITH STAINLESS STEEL 316L DHW CORRUGATED COIL, INTEGRATED BUFFER TANK SPECIFIC FOR HEAT PUMPS AND AND 2 FIXED HEAT EXCHANGERS



316L STAINLESS STEEL DH.W. CORRUGATED COIL

APPLICATION
Technical hot water storage and D.H.W. production. Heating/cooling buffer tank for heat pumps.

MATERIAL:
- ***BUFFER TANK:*** Mild steel painted on the outside. Buffer intented for closed circuit installation, so no anti-corrosion treatment is provided.
- ***DHW STORAGE:*** Stainless steel 316L corrugated coil, suitable for D.H.W.
- ***ENERGY BUFFER hot-cold:*** mild steel.

TECHNICAL DESCRIPTION
Designed for systems powered by heat pump heat source. ECO COMBI 3 PDC HY, at the typical temperatures of heat pumps, guarantees excellent DHW production thanks to the specially designed and dimensioned corrugated stainless steel 316L heat exchanger.

HEAT EXCHANGER
Nr. 2 mild steel fixed heat exchangers.

INSULATION
High thermal insulation with ecological polyurethane hard foam. Grey PVC external lining.

WARRANTY
5 years (See general sales conditions and warranty)

ACCESSORIES AND SPARE PARTS
See Accessories section for the entire list.

	Model	Art. Nr.	Heat pump max output	316L stainless steel corrugated coil for D.H.W. production		Upper heat exchanger		Lower heat exchanger		ErP
				Volume	Surface	Volume	Surface	Volume	Surface	ENERGY EFFICIENCY CLASS
			[kW]	[lt]	[m²]	[lt]	[m²]	[lt]	[m²]	
ECO COMBI 3 PDC HY VB HARD FOAM INSULATION	**300**	3270162310206	26	26,6	4,5	4,4	0,7	7,9	1,2	**C**
	500	3270162310207	26	31	5,3	7,7	1,2	14,5	2,2	**C**



ACCESSORIES

Thermometer

Art. Nr.
5032240000107
5 units box



Recirculation kit (only for models ≥ 500)

Art. Nr.
5221000000019
Connection 3/4"



Products designed and manufactured for using within temperature and pressure limits in accordance to Art. 4.3 Directive 2014/68/EU (P.E.D.)

ECO COMBI **3 PDC HY**

MULTI-HEAT ENERGY BUFFER FOR HEAT PUMP WITH STAINLESS STEEL 316L DHW CORRUGATED COIL, INTEGRATED BUFFER TANK SPECIFIC FOR HEAT PUMPS AND AND 2 FIXED HEAT EXCHANGERS

STORAGE		CORRUGATED DHW STAINLESS STEEL 316L COIL	FIXED HEAT EXCHANGER		BUFFER TANK	
Pmax	Tmax	Pmax	Pmax	Tmax	Pmax	Tmax
4 bar	99 °C	6 bar	12 bar	110 °C	4 bar	-10/+95 °C

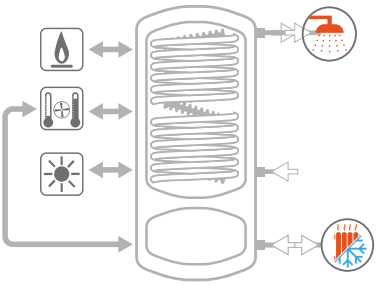

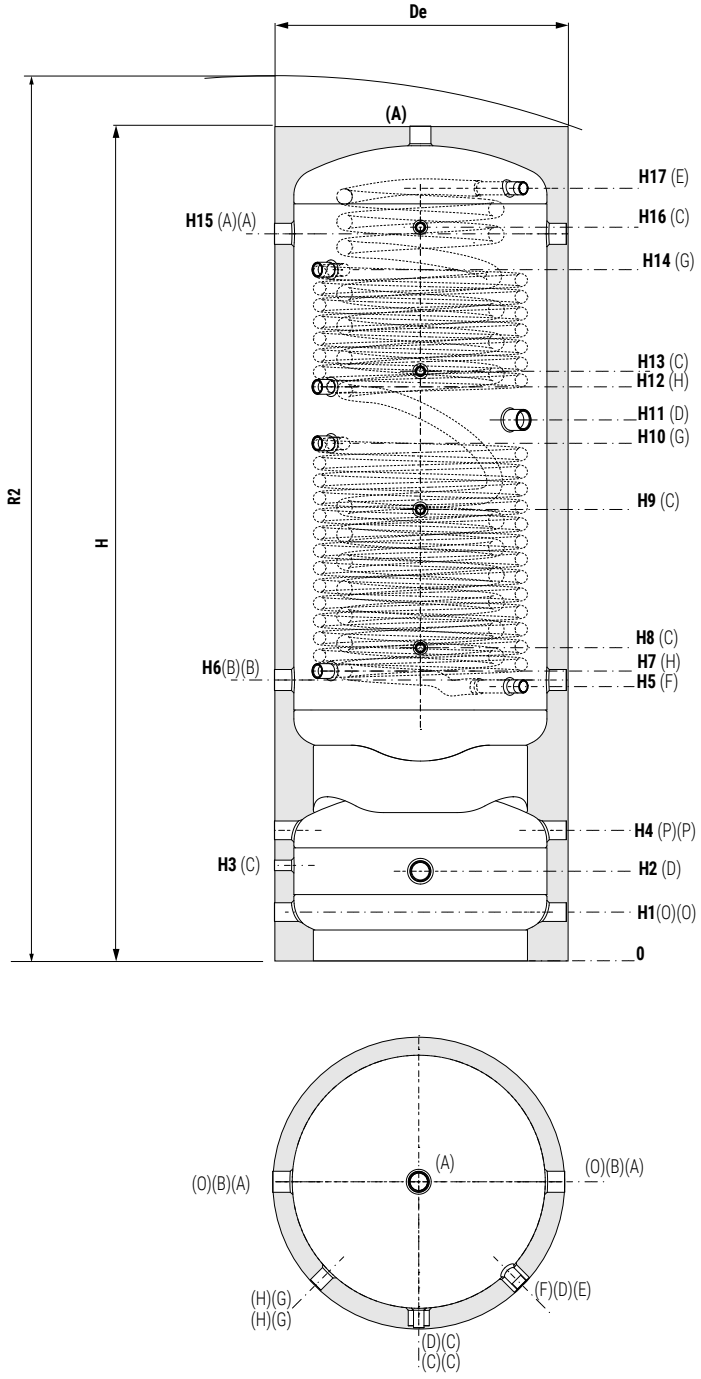

A	From generator - Heating delivery G 1"1/2 F
B	Heating return - to generator G 1"1/2 F
C	Instrumentation G 1/2" F
D	Electric immersion heater G 1"1/2 F
E	Domestic hot water circuit outlet
F	Domestic water inlet
G	Fixed heat exchanger inlet G 1" F
H	Fixed heat exchanger outlet G 1" F
O	Heating return - to generator G 1"1/4 F
P	From generator - Heating delivery G 1"1/4 F

Model	Volume	Buffer tank volume	De	H	R2	H1	H2	H3	H4	H5	H6
	[lt]		[mm]								
300	291	81	650	1965	2080	110	232	264	354	697	730
500	454	108	750	2145	2280	125	230	245	335	704	721

Model	H7	H8	H9	H10	H11	H12	H13	H14	H15	H16	H17	E-F
	[mm]											Connections
300	730	790	1145	1270	1370	1440	1500	1680	1680	1715	1815	1/2" M.
500	744	804	1159	1329	1389	1474	1514	1775	1867	1884	1984	1" M

Net volume data according to EN 15332 available on product label.

Products designed and manufactured for using within temperature and pressure limits in accordance to Art. 4.3 Directive 2014/68/EU (P.E.D.)

BOLLYTERM® RANGE

D.H.W production





Model	Bollyterm® HP NET	Bollyterm® HP 1 NET
Page nr.	118	120
Application		
Heat exchangers	Water heater with integrated heat pump	- Water heater with integrated heat pump - 1 fixed coil
Number of heat exchangers		
Energy source		
Energy efficiency class	**A+**	**A+**
Insulation	Polyurethane hard foam+painted metallic cover	Polyurethane hard foam+painted metallic cover
Available range	200 - 300	200 - 300
Installation	floor standing	floor standing
Suggested Application	Traditional installations for D.H.W. production	Traditional, solar and condensation installations for D.H.W. production





NEW

Bollyterm® HP 2 NET	Bollyterm® HOME R290
122	124
- Water heater with integrated heat pump - 2 fixed coils	- Water heater with integrated heat pump
A+	**A+**
Polyurethane hard foam+painted metallic cover	Polyurethane hard foam+painted metallic cover
300	80 - 110
floor standing	wall hanging
Traditional, solar and condensation installations for D.H.W. production	Traditional installations for D.H.W. production

BOLLYTERM® **HP NET**

POLYWARM® COATED WATER HEATER WITH INTEGRATED HEAT PUMP



DESIGN PATENTED

POLYWARM® COATED DHW STORAGE

PROMPT AVAILABILITY

APPLICATION
Production and storage of domestic hot water (DHW).

MATERIAL
Mild steel Polywarm® coated (Attestation ACS - WRAS).

HEAT PUMP
The water inside the tank is warmed up by an integrated heat pump, equipped with external condensing coil. **A 1500 Watt electric resistance with "BOOST" option is already installed.**
Electronic central unit with graphic display allows controlling and scheduling. Models with WiFi available.

INSULATION
High thermal insulation with ecological polyurethane hard foam.
Painted metallic external cover, upper cover and flange cover in ABS.

CATHODE PROTECTION
Magnesium anode.
Titanium anode (available only for WiFi models)

DRAIN
External confluence through drain connection.

GASKET- FLANGE PLATE
Silicone gaskets suitable for water intended for human consumption (tested according to 98/83/CE); Mild steel Polywarm® coated flange plate with electrical immersion resistance.

WARRANTY
5 years (tank). See general sales conditions and warranty for electrical parts.

ACCESSORIES AND SPARE PARTS
See Accessories section for the entire list.





BOLLYTERM® HP NET
HARD FOAM INSULATION

Model	Art. Nr.	Heat exchanger surface [m²]	ErP ENERGY EFFICIENCY CLASS
200	3180162330106	0,8	**A+**
300	3180162330107	1,2	**A+**
200 Wi-Fi	3180162330104	0,8	**A+**
300 Wi-Fi	3180162330105	1,2	**A+**

HEAT PUMP TECHNICAL DATA			
Model		BOLLYTERM® HP NET 200	BOLLYTERM® HP NET 300
Tank volume	lt	205	293
Lower heat exchanger surface	m²	-	-
Upper heat exchanger surface	m²	-	-
DHW connections		G1'' F	G1'' F
Maximum tank working pressure	MPa (bar)	1 (10)	1 (10)
Maximum tank working temperature	°C	90	90
PERFORMANCE DATA			
COP*		2,69	3,08
COP**		3,04	3,33
Ignition time***	hr:mm	03:55	06:44
Energy efficiency class ErP (Reg. EU nr 812/2013)		A+	A+
Seasonal efficiency / load profile*	%	115.9% / L	129.1% / XL
V40*	lt	195	342
Maximum heating temperature (only HP)	°C	60	60
Refrigerant		"R134a (GWP=1430, A1 ISO 817)"	"R134a (GWP=1430, A1 ISO 817)"
Refrigerant charge	kg	1,25	1,25
Equivalent CO2	t	1,79	1,79
Airflow temperature range	°C	-5/+43	-5/+43
Maximum fan head	Pa	120	120
Air-ducts diameter	mm	≥150	≥150
Sound power level (EN 12102)	dB (A)	56	56
ELECTRIC DATA			
Electric supply	V / Hz	220-240V~ / 50Hz	220-240V~ / 50Hz
Rated electric power	W	550+1500	550+1500
Rated current	A	8,9	8,9
Auxiliary electric power	W	1500	1500
Electric shockproof		I	I
Ingress Protection rating		IPX1	IPX1

*Values obtained according to EN 16147 with outdoor air temperature of 7°C (87% relative humidity / 6°C wet-bulb), D.H.W. inlet temperature of 10°C, and storage set-point temperature of 55°C.
**Values obtained according to EN 16147 with outdoor air temperature of 14°C (87% relative humidity / 13°C wet-bulb), D.H.W. inlet temperature of 10°C, and storage set-point temperature of 55°C.
***Values obtained according to EN 16147 with inlet air temperature to the fan of 20°C (60% relative humidity / 15°C wet-bulb), D.H.W. inlet temperature of 10°C, and storage set-point temperature of 55°C.

BOLLYTERM® **HP NET**

POLYWARM® COATED WATER HEATER WITH INTEGRATED HEAT PUMP

STORAGE	
Pmax	Tmax
10 bar	90 °C

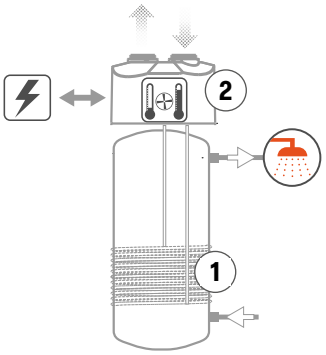

See TECHNICAL SUPPORT chapter for example of installation

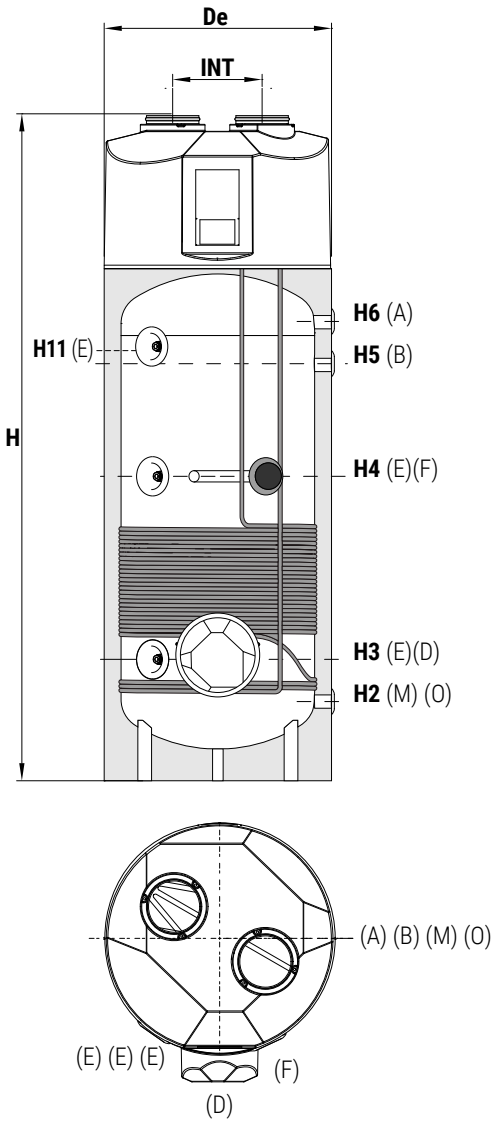

1 External to the storage, condensator coil avoiding any contact between coolant - D.H.W.

2 Electronic central unit (included):
- set point hot water
- self check
- anti-legionellosis treatement
- operating programs
- "BOOST" mode
- Photovoltaic integration
- WiFi controller

A	Domestic hot water outlet 1" F
B	Recirculation 1" F
D	Flange for inspection Ø 75 mm / Electric immersion heater
E	Connection for instrumentation 1/2" F
F	Connection for magnesium anode 1"1/4 F
M	Domestic cold water circuit inlet 1" F
O	Drain G 1" 1/4 F

Model	Volume	De	INT	H	H2	H3	H4	H5	H6	H11
	[lt]	[mm]								
200	205	640	256	1585	240	350	800	815	925	//
300	293	640	256	1960	240	350	860	1190	1300	1210

Net volume data according to EN 15332 available on product label.

CORDIVARI

BOLLYTERM® **HP 1 NET**

POLYWARM® COATED WATER HEATER WITH INTEGRATED HEAT PUMP AND 1 FIXED HEAT EXCHANGER



DESIGN PATENTED

APPLICATION
Production and storage of domestic hot water (DHW).
MATERIAL
Mild steel Polywarm® coated (Attestation ACS - WRAS).
HEAT PUMP
The water inside the tank is warmed up by an integrated heat pump, equipped with external condensing coil. **A 1500 Watt electric resistance with "BOOST" option is already installed.**
Electronic central unit with graphic display allows controlling and scheduling. Models with WiFi available.
INSULATION
High thermal insulation with ecological polyurethane hard foam.
Painted metallic external cover, upper cover and flange cover in ABS.
INTEGRATIVE HEAT EXCHANGER
Nr. 1 mild steel Polywarm® coated heat exchanger.

CATHODE PROTECTION
Magnesium anode.
Titanium anode (available only for WiFi models)
DRAIN
External confluence through drain connection.
GASKET- FLANGE PLATE
Silicone gaskets suitable for water intended for human consumption (tested according to 98/83/CE); Mild steel Polywarm® coated flange plate with electrical immersion resistance.
WARRANTY
5 years (tank). See general sales conditions and warranty for electrical parts.
ACCESSORIES AND SPARE PARTS
See Accessories section for the entire list.

POLYWARM® COATED DHW STORAGE

POLYWARM® COATED HEAT EXCHANGER

PROMPT AVAILABILITY





BOLLYTERM® HP 1 NET
HARD FOAM INSULATION

Model	Art. Nr.	Heat exchanger surface [m²]	ErP ENERGY EFFICIENCY CLASS
200	3181162330127	0,8	**A+**
300	3181162330128	1,2	**A+**
200 Wi-Fi	3181162330124	0,8	**A+**
300 Wi-Fi	3181162330125	1,2	**A+**

HEAT PUMP TECHNICAL DATA			
Model		BOLLYTERM® HP 1 NET 200	BOLLYTERM® HP 1 NET 300
Tank volume	lt	205	293
Lower heat exchanger surface	m²	0,8	1,2
Upper heat exchanger surface	m²	-	-
DHW connections		G1'' F	G1'' F
Maximum tank working pressure	MPa (bar)	1(10)	1(10)
Maximum tank working temperature	°C	90	90
PERFORMANCE DATA			
COP*		2,69	3,08
COP**		3,04	3,33
Ignition time***	hr:mm	03:55	06:44
Energy efficiency class ErP (Reg. EU nr 812/2013)		A+	A+
Seasonal efficiency / load profile*	%	115.9% /L	129.1% / XL
V40*	lt	195	342
Maximum heating temperature (only HP)	°C	60	60
Refrigerant		"R134a (GWP=1430, A1 ISO 817)"	"R134a (GWP=1430, A1 ISO 817)"
Refrigerant charge	kg	1,25	1,25
Equivalent CO2	t	1,79	1,79
Airflow temperature range	°C	-5/+43	-5/+43
Maximum fan head	Pa	120	120
Air-ducts diameter	mm	⩾150	⩾150
Sound power level (EN 12102)	dB (A)	56	56
ELECTRIC DATA			
Electric supply	V / Hz	220-240V~ / 50Hz	220-240V~ / 50Hz
Rated electric power	W	550+1500	550+1500
Rated current	A	8,9	8,9
Auxiliary electric power	W	1500	1500
Electric shockproof		I	I
Ingress Protection rating		IPX1	IPX1

*Values obtained according to EN 16147 with outdoor air temperature of 7°C (87% relative humidity / 6°C wet-bulb), D.H.W. inlet temperature of 10°C, and storage set-point temperature of 55°C.
**Values obtained according to EN 16147 with outdoor air temperature of 14°C (87% relative humidity / 13°C wet-bulb), D.H.W. inlet temperature of 10°C, and storage set-point temperature of 55°C.
***Values obtained according to EN 16147 with inlet air temperature to the fan of 20°C (60% relative humidity / 15°C wet-bulb), D.H.W. inlet temperature of 10°C, and storage set-point temperature of 55°C.

Products designed and manufactured for using within temperature and pressure limits in accordance to Art. 4.3 Directive 2014/68/EU (P.E.D.)

BOLLYTERM® **HP 1 NET**

POLYWARM® COATED WATER HEATER WITH INTEGRATED HEAT PUMP AND 1 FIXED HEAT EXCHANGER

STORAGE		HEAT EXCHANGER	
Pmax	Tmax	Pmax	Tmax
10 bar	90 °C	12 bar	110 °C

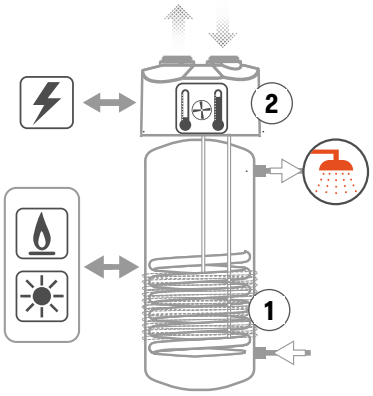

See TECHNICAL SUPPORT chapter for example of installation

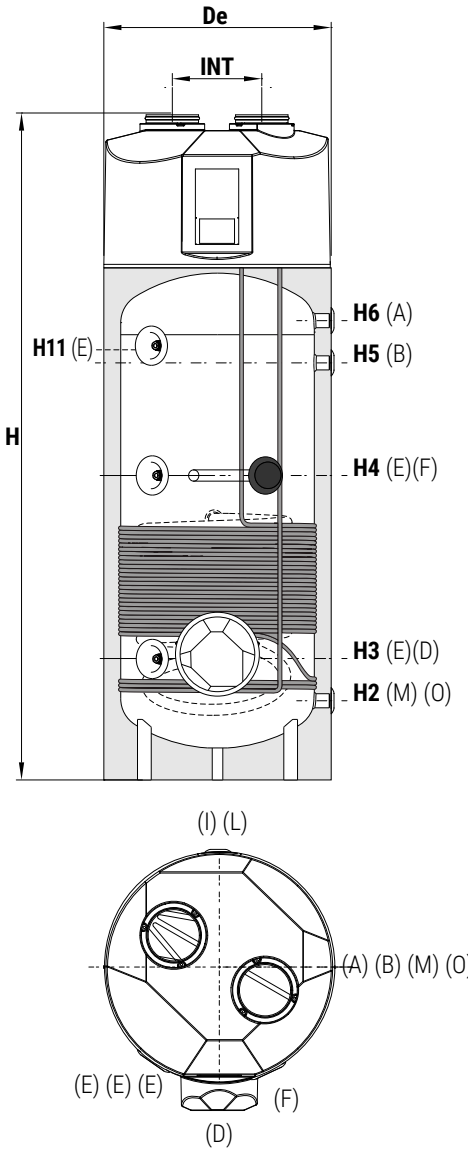

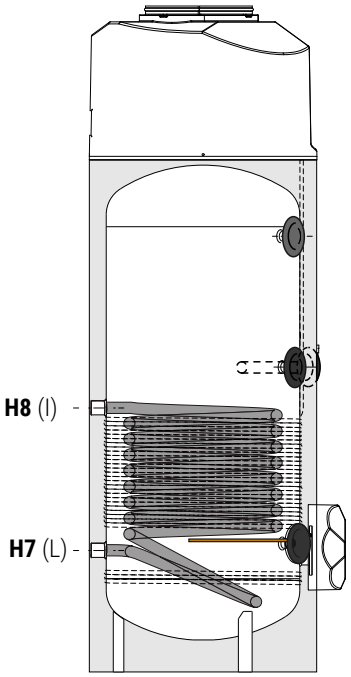

1 External to the storage, condensator coil avoiding any contact between coolant - D.H.W.

2 Electronic central unit (included):
- set point hot water
- self check
- anti-legionellosis treatement
- operating programs
- "BOOST" mode
- Photovoltaic integration
- WiFi controller

A	Domestic hot water outlet 1" F
B	Recirculation 1" F
D	Flange for inspection Ø 75 mm / Electric immersion heater
E	Connection for instrumentation 1/2" F
F	Connection for magnesium anode 1"1/4 F
I	Primary circuit inlet G 1"1/4 F
L	Primary circuit outlet G 1"1/4 F
M	Domestic cold water circuit inlet 1" F
O	Drain G 1" 1/4 F

Model	Volume	De	INT	H	H2	H3	H4	H5	H6	H7	H8	H11
	[lt]	[mm]										
200	205	640	256	1585	240	350	800	815	925	345	765	//
300	293	640	256	1960	240	350	860	1190	1300	351	755	1210

Net volume data according to EN 15332 available on product label.

Products designed and manufactured for using within temperature and pressure limits in accordance to Art. 4.3 Directive 2014/68/EU (P.E.D.)

BOLLYTERM® **HP 2 NET**

POLYWARM® COATED WATER HEATER WITH INTEGRATED HEAT PUMP AND 2 FIXED HEAT EXCHANGERS



DESIGN PATENTED

APPLICATION
Production and storage of domestic hot water (DHW).
MATERIAL
Mild steel Polywarm® coated (Attestation ACS - WRAS).
HEAT PUMP
The water inside the tank is warmed up by an integrated heat pump, equipped with external condensing coil. **A 1500 Watt electric resistance with "BOOST" option is already installed.**
Electronic central unit with graphic display allows controlling and scheduling. Models with WiFi available.
INSULATION
High thermal insulation with ecological polyurethane hard foam.
Painted metallic external cover, upper cover and flange cover in ABS.
INTEGRATIVE HEAT EXCHANGER
Nr. 2 mild steel Polywarm® coated heat exchangers.

CATHODE PROTECTION
Magnesium anode.
Titanium anode (available only for WiFi models)
DRAIN
External confluence through drain connection.
GASKET- FLANGE PLATE
Silicone gaskets suitable for water intended for human consumption (tested according to 98/83/CE); Mild steel Polywarm® coated flange plate with electrical immersion resistance.
WARRANTY
5 years (tank). See general sales conditions and warranty for electrical parts.
ACCESSORIES AND SPARE PARTS
See Accessories section for the entire list.

POLYWARM® COATED DHW STORAGE

POLYWARM® COATED HEAT EXCHANGER

PROMPT AVAILABILITY

		Model	Art. Nr.	Heat exchanger surface [m²] Upper	Heat exchanger surface [m²] Lower	ErP ENERGY EFFICIENCY CLASS
	**BOLLYTERM® HP 2 NET** HARD FOAM INSULATION	**300**	3181162330129	0,67	1,2	**A+**
		300 Wi-Fi	3181162330126	0,67	1,2	**A+**

HEAT PUMP TECHNICAL DATA		
Model		BOLLYTERM® HP 2 NET 300
Tank volume	lt	293
Lower heat exchanger surface	m^2	1,2
Upper heat exchanger surface	m^2	0,67
DHW connections		G 1" F
Maximum tank working pressure	MPa (bar)	1 (10)
Maximum tank working temperature	°C	90
PERFORMANCE DATA		
COP*		3,08
COP**		3,33
Ignition time***	hr:mm	06:44
Energy efficiency class ErP (Reg. EU nr 812/2013)		A+
Seasonal efficiency / load profile*	%	129.1% / XL
V40*	lt	342
Maximum heating temperature (only HP)	°C	60
Refrigerant		"R134a (GWP=1430, A1 ISO 817)"
Refrigerant charge	kg	1,25
Equivalent CO2	t	1,79
Airflow temperature range	°C	-5/+43
Maximum fan head	Pa	120
Air-ducts diameter	mm	⩾150
Sound power level (EN 12102)	dB (A)	56
ELECTRIC DATA		
Electric supply	V / Hz	220-240V~ / 50Hz
Rated electric power	W	550+1500
Rated current	A	8,9
Auxiliary electric power	W	1500
Electric shockproof		I
Ingress Protection rating		IPX1

*Values obtained according to EN 16147 with outdoor air temperature of 7°C (87% relative humidity / 6°C wet-bulb), D.H.W. inlet temperature of 10°C, and storage set-point temperature of 55°C.
**Values obtained according to EN 16147 with outdoor air temperature of 14°C (87% relative humidity / 13°C wet-bulb), D.H.W. inlet temperature of 10°C, and storage set-point temperature of 55°C.
***Values obtained according to EN 16147 with inlet air temperature to the fan of 20°C (60% relative humidity / 15°C wet-bulb), D.H.W. inlet temperature of 10°C, and storage set-point temperature of 55°C.

Products designed and manufactured for using within temperature and pressure limits in accordance to Art. 4.3 Directive 2014/68/EU (P.E.D.)

BOLLYTERM® **HP 2 NET**

POLYWARM® COATED WATER HEATER WITH INTEGRATED HEAT PUMP AND 2 FIXED HEAT EXCHANGERS

STORAGE		HEAT EXCHANGER	
Pmax	Tmax	Pmax	Tmax
10 bar	90 °C	12 bar	110 °C

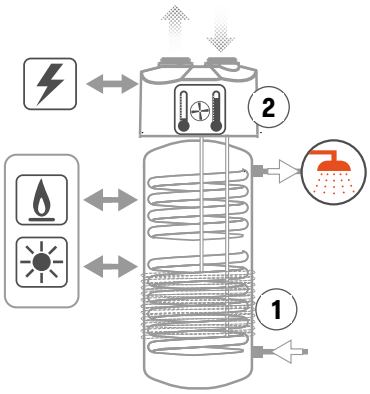

See TECHNICAL SUPPORT chapter for example of installation

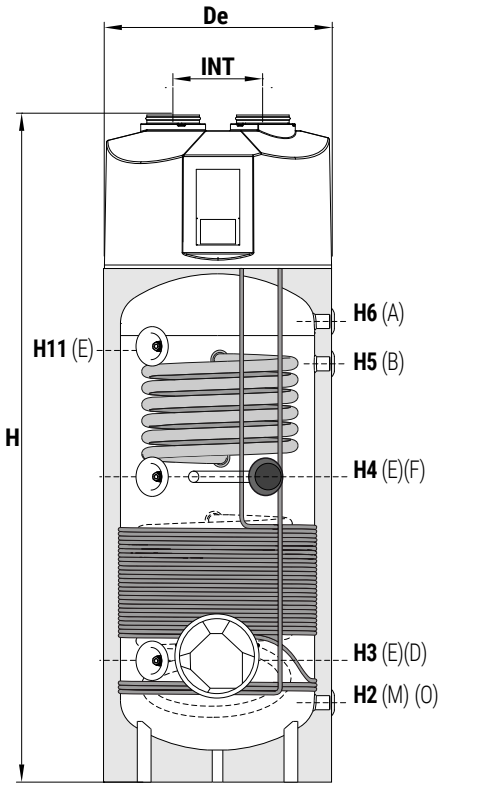

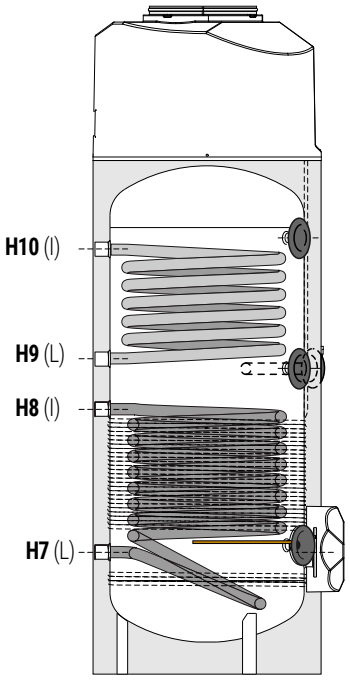

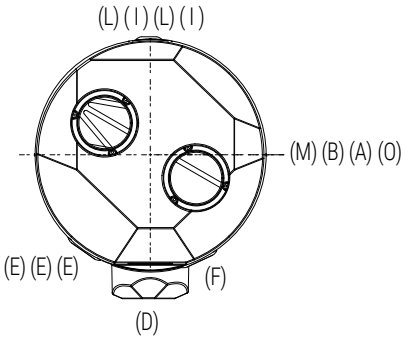

1 External to the storage, condensator coil avoiding any contact between coolant - D.H.W.

2 Electronic central unit (included):
- set point hot water
- self check
- anti-legionellosis treatement
- operating programs
- "BOOST" mode
- Photovoltaic integration
- WiFi controller

A	Domestic hot water outlet 1" F
B	Recirculation 1" F
D	Flange for inspection Ø 75 mm / Electric immersion heater
E	Connection for instrumentation 1/2" F
F	Connection for magnesium anode 1"1/4 F
I	Primary circuit inlet G 1"1/4 F
L	Primary circuit outlet G 1"1/4 F
M	Domestic cold water circuit inlet 1" F
O	Drain G 1" 1/4 F

Model	Volume	De	INT	H	H2	H3	H4	H5	H6	H7	H8	H9	H10	H11
	[lt]	[mm]												
300	293	640	256	1960	240	350	860	1190	1300	351	755	900	1140	1210

Net volume data according to EN 15332 available on product label.

Products designed and manufactured for using within temperature and pressure limits in accordance to Art. 4.3 Directive 2014/68/EU (P.E.D.)

BOLLYTERM® **HOME R290**

WALL HANGING WATER HEATER WITH INTEGRATED HEAT PUMP



NEW

DESIGN PATENTED

POLYWARM® COATED DHW STORAGE

PROMPT AVAILABILITY

APPLICATION
Production and storage of domestic hot water (DHW).
MATERIAL
Mild steel Polywarm® coated (Attestation ACS - EN 16421)
HEAT PUMP
The water inside the tank is warmed up by an integrated heat pump, equipped with external condensing coil. A 1500 Watt electric resistance with "BOOST" option is already installed.
Electronic central unit with graphic display allows controlling and scheduling. Wi-fi connection.
INSULATION
High thermal insulation with ecological polyurethane hard foam.
Painted metallic external cover, upper cover in ABS..

DRAIN
External confluence through drain connection.
WARRANTY
5 years (tank). See general sales conditions and warranty for electrical parts.
ACCESSORIES AND SPARE PARTS
See Accessories section for the entire list.

	Model	Art. Nr.	ErP ENERGY EFFICIENCY CLASS
BOLLYTERM® HOME R290 HARD FOAM INSULATION	**80**	3180162330052	**A+**
	110	3180162330053	**A+**

HEAT PUMP TECHNICAL DATA			
Model		BOLLYTERM® HOME R290 - **80**	BOLLYTERM® HOME R290 - **110**
Tank volume	*lt*	80	110
Net weight	*kg*	55	63
DHW connections		G 1/2" M	G 1/2" M
Maximum tank working pressure	*MPa (bar)*	1 (10)	1 (10)
PERFORMANCE DATA			
COP*		2,93	3,04
COP**		3,74	3,74
Ignition time**	*hr:mm*	04:54	05:53
Ignition time heat pump + electric immersion heater (Boost) **	*hr:mm*	01:46	02:13
Energy efficiency class ErP (Reg. EU nr 812/2013)		A+	A+
Seasonal efficiency / load profile*	%	123,1/M	128,6/M
V40* (D.H.W.≥ 40°C available with heated storage)	*lt*	114	140
Maximum heating temperature (only HP)	°C	65 °C	65 °C
Maximum D.H.W. temperature with electric heater	°C	70°C	70 °C
Refrigerant		R290 (GWP=3, A3 ISO 817)	R290 (GWP=3, A3 ISO 817)
Refrigerant charge	*kg*	0,14	0,14
Equivalent CO2	*t*	0.00042	0.00042
Airflow temperature range	°C	-5/+43	-5/+43
Maximum fan head	*Pa*	75	75
Air-ducts diameter	*mm*	125	125
Sound power level (EN 12102)	*dB (A)*	45	45
ELECTRIC DATA			
Electric supply	*V / Hz*	220-240V- / 50Hz	220-240V- / 50Hz
Rated electric power	*W*	365+1500	365+1500
Rated current	*A*	8,1	8,1
Auxiliary electric power	*W*	1500	1500
Electric shockproof		I	I
Ingress Protection rating		IPX1	IPX1

*Values obtained according to EN 16147 with outdoor air temperature of 7°C (87% relative humidity / 6°C wet-bulb), D.H.W. inlet temperature of 10°C, and storage set-point temperature of 55°C.
**Values obtained according to EN 16147 with outdoor air temperature of 14°C (87% relative humidity / 13°C wet-bulb), D.H.W. inlet temperature of 10°C, and storage set-point temperature of 55°C.

Products designed and manufactured for using within temperature and pressure limits in accordance to Art. 4.3 Directive 2014/68/EU (P.E.D.)

BOLLYTERM® **HOME R290**

WALL HANGING WATER HEATER WITH INTEGRATED HEAT PUMP

STORAGE	
Pmax	Tmax
10 bar	90 °C



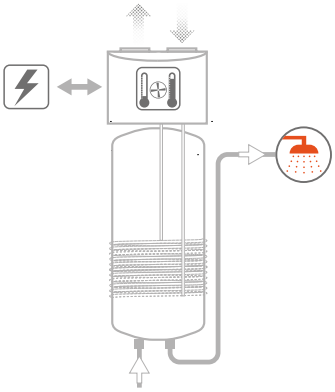



Integrated heat pump

NATURAL REFRIGERANT R 290

External condenser with "microchannel" technology to maximize safety and performance

Electronic Control Unit:
- Water set-point adjustment with Heating Curve Function
- Cyclic anti-Legionella antibacterial treatment
- Operating time scheduling
- "Auto", "ECO", "Boost", "Electric-only" and "Ventilation-only" modes
- Wi-Fi control
- Photovoltaic function
- Automatic defrost function

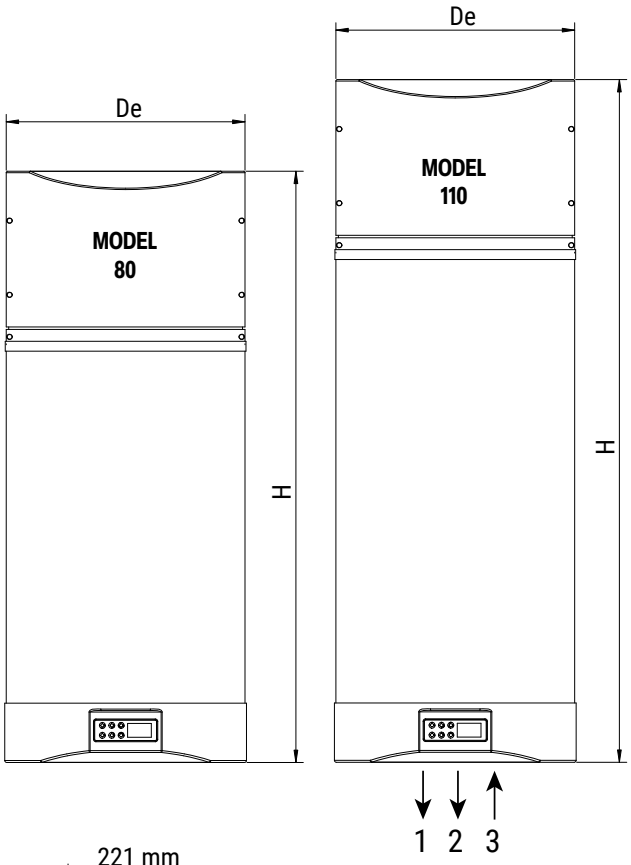

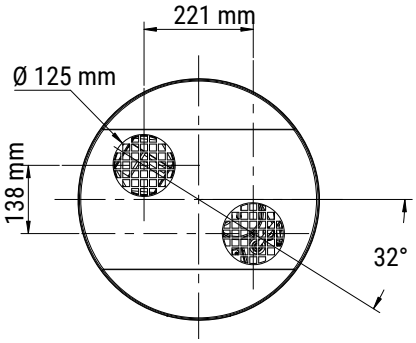

1	Domestic hot water circuit outlet 1/2" M
2	Drain/Condensate
3	Domestic cold water circuit inlet 1/2" M

Model	Volume utile	De	H
	[lt]	[mm]	
80	80	483	1208
110	102,5	483	1392

Net volume data according to EN 15332 available on product label.

Products designed and manufactured for using within temperature and pressure limits in accordance to Art. 4.3 Directive 2014/68/EU (P.E.D.)

CORDIVARI



PLASTIC ELEMENTS FOR CANALIZATION

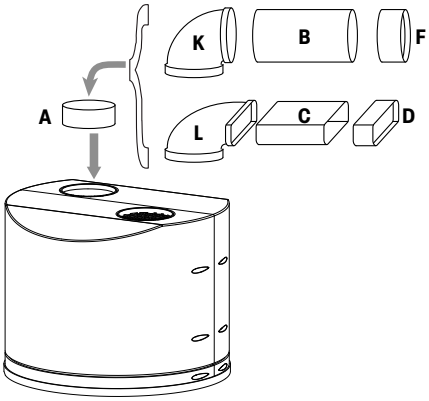

	Art. Nr.	DESCRIPTION
 A	5221000000085	Stub pipe of Ø 125 mm Length 75 mm
 B	5221000000086	Tube of Ø 125 Mm Length 1200 mm
 C	5221000000087	Rectangular tube of Ø 150x70 mm Length 1200 mm
 D	5221000000088	Rectangular plastic joint Ø 150x70 mm
	5221000000089	Horizontal joint from round pipe of Ø125 mm Rectangular Ø 150x70 mm
 F	5221000000090	Round joint Ø 125 mm
	5221000000091	Flexible tube Ø 125 mm Length 1000 mm
	5221000000092	Flexible rectangular tube Ø 150x70 mm Length 1000 mm
	5221000000093	Rectangular curve Ø 150x70 mm horizontal
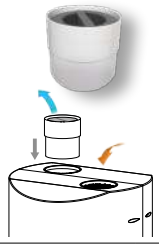	5221000000107	**NEW** **Sound pressure reduction** Ø 125 L 120 mm Acoustic silencer to reduce by 6dbA the declared values (49 dBA). Tested according to UNI EN 12102-2 and UNI EN ISO 3741 standards.

	Art. Nr.	DESCRIPTION
	5221000000094	Rectangular curve Ø 150x70 mm vertical
 K	5221000000095	Round elbow curve Ø125 mm
 L	5221000000096	Vertical curve from round Ø 125 mm to rectangular Ø 150x70 mm
	5221000000097	Pair of pipe clamps Ø 150 mm
	5221000000098	Pair of brackets for rectangular tubes Ø 150x70 mm
	5221000000099	Plastic grid with fixed fins for tubes of Ø 125 mm
	5221000000100	Roll of adhesive white tape for tubes, width 50 x length 10 mt
	5221000000101	Plastic pipe flange for tubes of Ø 125 mm



CANALIZATION EXAMPLES

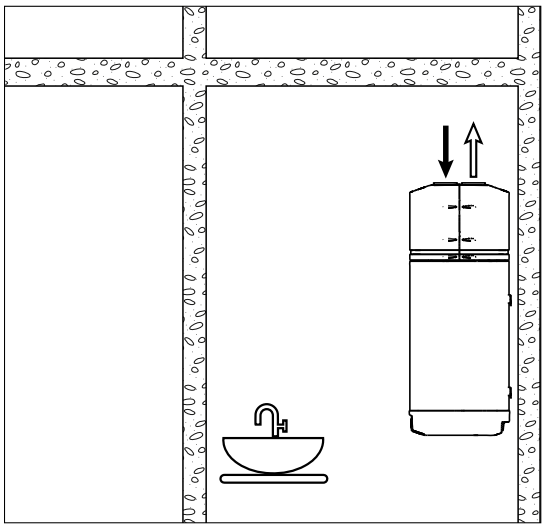

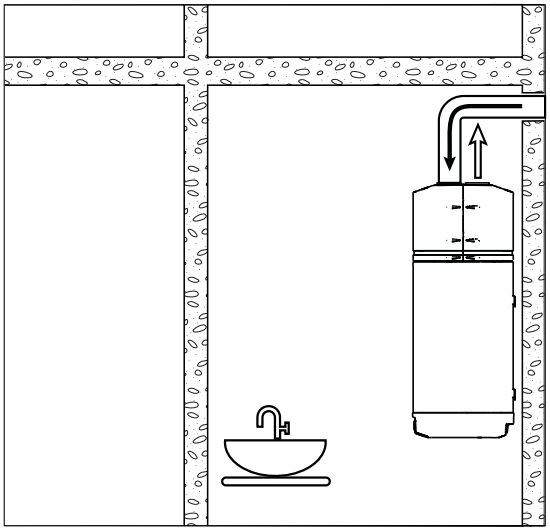

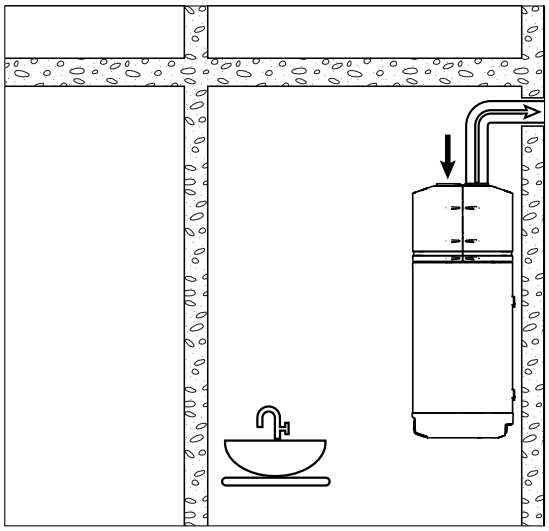

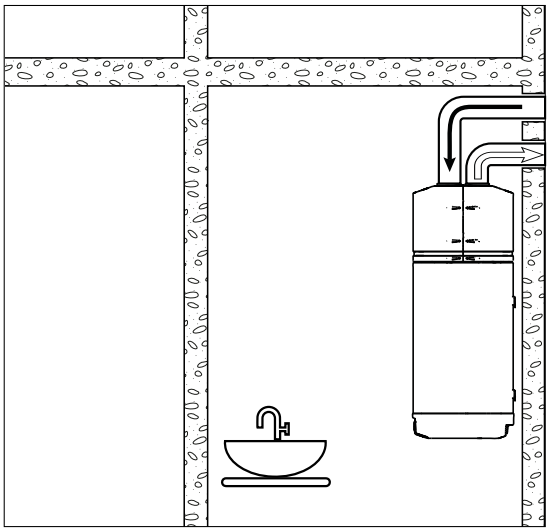

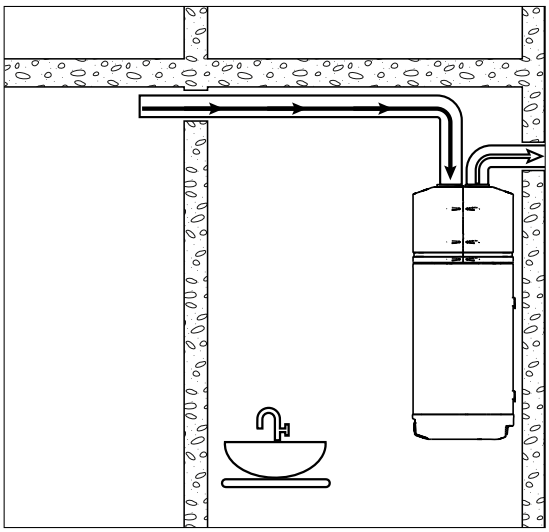

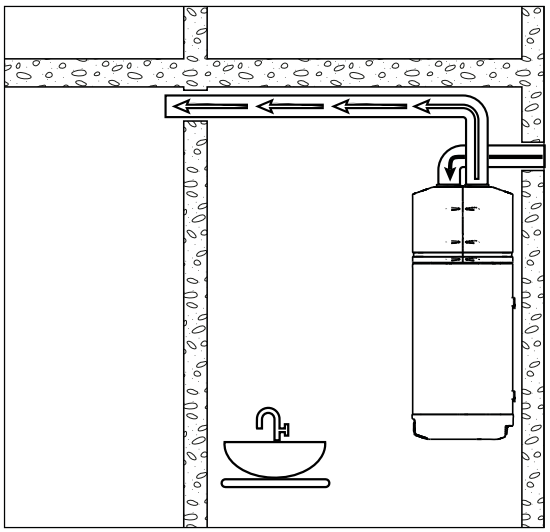

EXTRA CALORIFIERS RANGE

D.H.W. production






Model	EXTRA	EXTRA Compact	EXTRA Horizontal	EXTRA Steam
Page nr.	130	134	152	154
Application				
Heat exchangers	- Stainless steel 316L extractable heat exchangers	- Stainless steel 316L extractable heat exchangers	- Stainless steel 316L extractable heat exchangers	- Stainless steel 316L extractable heat exchangers
Number of heat exchangers				
Energy source				
Energy efficiency class	**B-C**	**C**	**C**	**B-C**
Insulation	- Polyurethane hard foam - Dismountable polyester fleece	- Dismountable polyester fleece	- Dismountable polyester fleece	- Polyurethane hard foam - Dismountable polyester fleece
Available range	200 ÷ 5000	1500 ÷ 4000	200 ÷ 5000	500 ÷ 5000
Installation	floor standing	floor standing	floor standing	floor standing
Suggested Application	Traditional and solar installations	Traditional and solar installations limited height spaces	Traditional and solar installations	Industrial installations/ installations with steam generators




NEW



EXTRA Plus	VASO Inerziale	VASO Inerziale M1	VASO Inerziale/A1	VASO STORAGE
158	172	174	176	178
- Extractable finned copper heat exchangers	--	(with inspection flange and connection for immersion heater)	--	(with inspection flange and connection for immersion heater)
B-C	**B-C**	**C**	**B-C**	**B-C**
- Polyurethane hard foam - Dismountable polyester fleece	- Polyurethane hard foam - Dismountable polyester fleece	- Dismountable insulation with M1 fireproof rating	- Class A1 fireproo glass/rock wool insulation + Aluminium cover hinged and removable.	- Polyurethane hard foam - Dismountable polyester fleece
200 ÷ 5000	200 ÷ 5000	300 ÷ 4000	200 ÷ 5000	200 ÷ 5000
floor standing	floor standing	floor standing	floor standing	floor standing
Solar, biomass and condensation installations	Traditional, solar, biomass and condensation installations	Traditional, solar, biomass and condensation installations	Traditional, solar, biomass and condensation installations	Traditional, solar, biomass and condensation installations

EXTRA **1 WX**

POLYWARM® COATED CALORIFIER WITH 1 EXTRACTABLE STAINLESS STEEL HEAT EXCHANGER



APPLICATION
Production and storage of domestic hot water (DHW).
MATERIAL
Mild steel Polywarm® coated (Attestation ACS - EN 16421)
HEAT EXCHANGER
Stainless steel 316L Antilegionella® heat exchanger, with tubes bent to the bottom
INSULATION
HARD: High thermal insulation with ecological polyurethane hard foam.
SOFT (DISMOUNTABLE): NOFIRE® polyester fleece 100% made of recyclable material, with high thermal insulation. Fire resistance class B-s2d0 according to EN 13501.
Grey PVC external lining.

CATHODE PROTECTION
Magnesium anode. Models > 1500 Nr. 2 magnesium anodes.
DRAIN
External confluence through drain connection. Models > 1000 external confluence through drain pipe.
GASKET- FLANGE PLATE
Silicone gaskets suitable for water intended for human consumption (tested according to 98/83/CE), max temperature up to 200°C. Mild steel exchanger head with anticorrosion treatment.
WARRANTY
5 years (See general sales conditions and warranty)
ACCESSORIES AND SPARE PARTS :
See Accessories section for the entire list.









		Model	Art. Nr.	Heat exchangers surface [m²]	ErP ENERGY EFFICIENCY CLASS
	 **EXTRA 1 WXB** HARD FOAM INSULATION	**200**	3072162360122	0,5	**B**
		300	3072162360123	0,75	**C**
		500	3072162360124	1	**C**
		800	3072162360125	1,5	**B**
		1000	3072162360126	2	**C**
		1500	3072162360127	3	**C**
		2000	3072162360128	4	**B**
	 **EXTRA 1 WXC** DISMOUNTABLE SOFT FLEECE INSULATION	**500**	3072162360134	1	**C**
		800	3072162360135	1,5	**C**
		1000	3072162360136	2	**C**
		1500	3072162360137	3	**C**
		2000	3072162360138	4	**C**
		2500	3072162360113	5	
		3000	3072162360109	6	
		4000	3072162360110	8	
		5000	3072162360112	10	

ACCESSORIES

ELECTRIC IMMERSION HEATERS

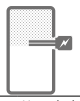

		MONOPHASE			THREEPHASE				
		1,5 kW	**2** kW	**3** kW	**4** kW	**5** kW	**6** kW	**9** kW	**12** kW
		5240000000051	5240000000052	5240000000053	5240000000047	5240000000048	5240000000049	5240000000050	5240000000031
Mod.	Heated volume by electric immersion heater [lt]	Ignition time from 10 °C to 45 °C with electric immersion heaters [min]			Ignition time from 10 °C to 45 °C with electric immersion heaters [min]				
200	49	87	65	44	33	//	//	//	//
300	76	136	102	68	51	//	//	//	//
500	127	228	171	114	85	68	57	//	//
800	178	318	239	159	120	96	80	//	//
1000	243	436	327	218	163	131	109	73	54
1500	288	516	387	258	194	155	129	86	65
2000	443	793	595	396	297	238	198	132	99
2500	577	1033	775	517	387	310	258	172	129
3000	577	1033	775	517	387	310	258	172	129
4000	797	1428	1071	714	535	428	357	238	178
5000	1040	1864	1398	932	699	559	466	311	233

FULL CONTROL electronic unit (mounted on tank)

Art. Nr.	for models
5220280000004	WXC
5220280000005	WXB



HEAT MANAGER + electric immersion heater 1,5 kW + probe +3m cable

Art. Nr.	Output [kW]
5240000000074	1,5
5240000000075	2
5240000000076	3



Titanium anode

See Accessories section



Products designed and manufactured for using within temperature and pressure limits in accordance to Art. 4.3 Directive 2014/68/EU (P.E.D.)

EXTRA **1 WX**

POLYWARM® COATED CALORIFIER WITH 1 EXTRACTABLE STAINLESS STEEL HEAT EXCHANGER

	STORAGE		HEAT EXCHANGER	
Model	Pmax	Tmax	Pmax	Tmax
200 ÷ 1000	8 bar	90 °C	12 bar	110 °C
1500 ÷ 5000	6 bar			

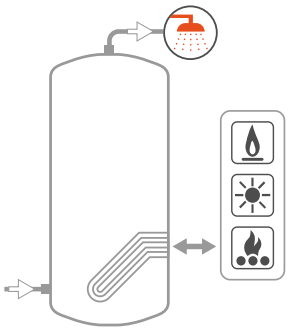

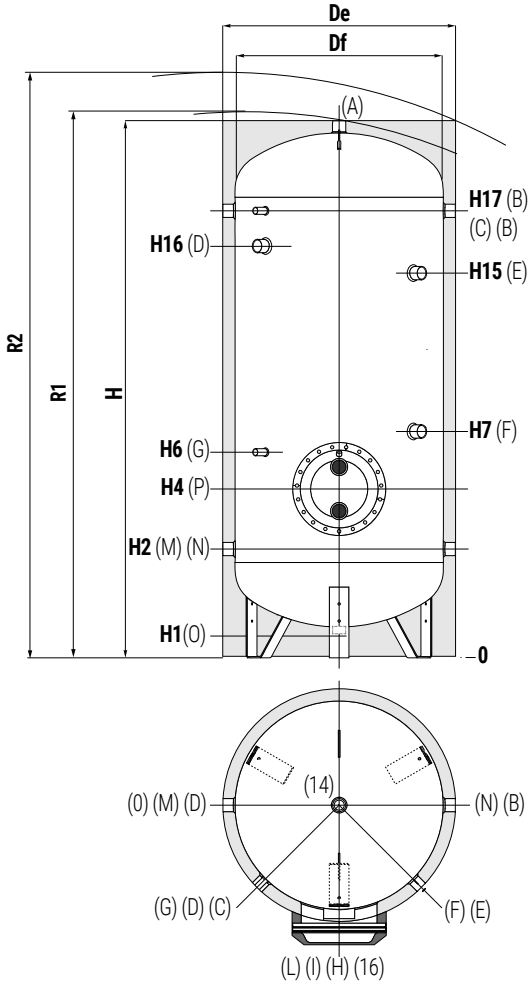

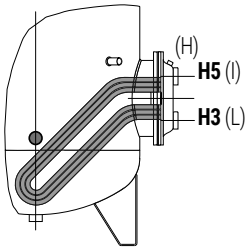

A	Domestic hot water outlet
B	Recirculation / Domestic hot water outlet
C	Connection for instrumentation G 1/2" F
D	Connection for electric immersion heater G 1"1/2 F . For models > 800 connection G 2" F
E	Connection for 2nd magnesium anode G 1"1/4 F (only for models > 1500)
F	Connection for magnesium anode G 1" 1/4 F
G	Connection for instrumentation G 1/2" F
H	Heat exchanger drain G 3/8" F
I	Primary circuit inlet G 1" F. For models > 500 connection G 2" F
L	Primary circuit outlet G 1" F. For models > 500 connection G 2" F
M	Domestic cold water circuit inlet
N	Alternative domestic cold water circuit inlet or connection for more tanks in series
O	Drain
P	Heat exchanger flange

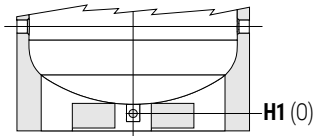

Models from 1500 to 5000 are equipped with a practical skirt support which facilitate the handling with transpallets and forklifts. Also, discharge piping already mounted to allow total emptying.

EXTRA 1 WXB - HARD FOAM INSULATION

Model	Volume	Weight	De	H	R2	H1	H2	H3	H4	H5	H6	H7	H15	H16	H17	P	B M-N	A	O
	[lt]	[kg]	[mm]														Connections F		
200	191	52	550	1449	1560	85	325	360	410	460	520	650	//	1075	1185	Øi220/Øe300	1"1/4	1"1/4	1"1/4
300	292	65	650	1499	1640	85	350	385	435	485	545	735	//	1100	1210	Øi220/Øe300	1"1/4	1"1/4	1"1/4
500	500	83	750	1800	1960	85	375	410	460	510	570	760	//	1329	1485	Øi220/Øe300	1"1/4	1"1/4	1"1/4
800	794	139	900	2135	2330	85	405	450	540	630	690	870	//	1610	1765	Øi300/Øe380	1"1/4	1"1/2	1"1/4
1000	1042	181	1000	2221	2450	105	458	503	593	683	743	993	//	1664	1818	Øi300/Øe380	1"1/2	2"	1"1/2
1500	1445	224	1100	2415	2660	109	440	585	675	765	825	1075	//	1895	2050	Øi300/Øe380	1"1/2	2"	1"
2000	1978	279	1300	2492	2820	91	467	587	692	797	867	842	1952	1877	2057	Øi350/Øe430	2"	2"	1"

Net volume data according to EN 15332 available on product label.

EXTRA 1 WXC - DISMOUNTABLE SOFT FLEECE INSULATION

Model	Volume	Weight	De	Df	H	R1	R2	H1	H2	H3	H4	H5	H6	H7	H15	H16	H17	P	B M-N	A	O
	[lt]	[kg]	[mm]																Connections F		
500	500	90	870	650	1841	1998	2090	101	416	451	501	551	611	801	//	1370	1526	Øi220/Øe300	1"1/4	1"1/2	1"1/4
800	794	139	970	750	2188	2220	2400	113	433	478	568	658	718	898	//	1638	1793	Øi300/Øe380	1"1/4	1"1/2	1"1/4
1000	1042	181	1070	850	2242	2270	2490	101	454	499	589	679	739	989	//	1660	1814	Øi300/Øe380	1"1/2	2"	1"1/2
1500	1445	224	1210	950	2440	2495	2730	109	440	585	675	765	825	1075	//	1895	2050	Øi300/Øe380	1"1/2	2"	1"
2000	1978	279	1360	1100	2492	2570	2850	91	467	587	692	797	867	842	1952	1877	2057	Øi350/Øe430	2"	2"	1"
2500	2315	328	1350	1250	2311	2480	2690	140	551	671	776	881	951	976	1816	1732	1891	Øi350/Øe430	2"	2"	1"
3000	2921	384	1350	1250	2811	2950	3130	140	551	731	836	941	1011	1036	2316	2232	2391	Øi350/Øe430	2"	2"	1"
4000	3769	521	1500	1400	2875	3050	3250	114	570	750	855	960	1030	1035	2315	2238	2410	Øi350/Øe430	2"	2"	1"
5000	4982	657	1700	1600	2915	3130	3380	94	580	750	855	960	1030	1035	2335	2265	2420	Øi350/Øe430	2"	2"	1"

Net volume data according to EN 15332 available on product label.

Products designed and manufactured for using within temperature and pressure limits in accordance to Art. 4.3 Directive 2014/68/EU (P.E.D.)

EXTRA **1 WX**

HEAT EXCHANGERS TECHNICAL DATA



Cordivari heat exchangers, with tubes bent to the bottom, are able to heat the complete volume in an homogeneus way.
Energy storaging is therefore improved and ignition time data refer to the complete volume of the tank, while in traditional straight heat exchangers equipped calorifiers, a range between 9-17% of the volume remains cold.

Model	Primary flow rate	Ignition time (minutes) from 10 °C to t2 and primary at T1				Maximum power exchange (kW) with primary at T1, secondary within 10-45 °C and constant use of DHW production				DHW continuous production lt/h within 10-45 °C and primary at T1HW production			
	[m³/h]	T1/t2				T1				T1			
		55/50	65/60	70/60	80/60	55	65	70	80	55	65	70	80
200	2	113	113	77	49	7,3	11,5	13,7	18	178	283	338	455
	1	147	148	102	65	5,8	8,9	10,5	13,9	141	218	258	344
300	3	112	113	76	48	11,1	17	21	28	274	435	520	701
	1,5	145	146	102	65	8,9	13,8	16,3	21,6	219	339	402	534
500	4	139	140	96	60	15	23,8	28,5	38	369	587	702	947
	2	180	181	125	80	12,1	18,7	22,1	29,4	297	460	545	725
800	6	146	147	101	64	23	36	44	59	570	908	1087	1465
	3	186	188	130	83	18	29	34	46	465	721	854	1136
1000	10	128	128	86	54	33	53	63	86	814	1309	1571	2127
	5	157	157	107,9	69	27	43	51	69	687	1077	1281	1711
1500	15	120	119	82	51	51	81	98	133	1256	2022	2428	3290
	7,5	145	146	100	64	44	68	81	108	1075	1687	2008	2684
2000	20	121	122	83	52	69	111	133	180	1699	2738	3288	4453
	10	146	147	101	65	59	93	111	148	1465	2302	2741	3665
2500	20	118	119	81	51	84	134	160	216	2066	3309	3964	5352
	10	145	146	101	65	71	111	131	174	1755	2734	3244	4314
3000	20	128	127	87	55	100	159	190	255	2461	3926	4694	6321
	10	156	157	110	70	84	130	154	204	2082	3224	3817	5053
4000	20	126	127	87	56	131	207	247	330	3236	5121	6105	8168
	10	159	161	112	73	110	168	198	260	2718	4151	4903	6443
5000	20	137	138	96	61	162	253	301	401	3992	6270	7450	9921
	10	176	179	125	82	135	204	239	312	3332	5049	5923	7727

LOWER
HEAT EXCHANGER

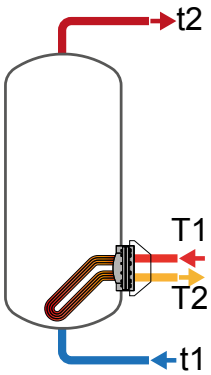

Model	Primary flow rate	DHW produced in the first 10 minutes in lt/10' input 10 °C output 45 °C, storage at t2 and primary at T1				DHW produced in the first hour in lt/60' input 10 °C output 45 °C, storage at t2 and primary at T1				Heat exchanger pressure drop	
	[m³/h]	T1/t2				T1/t2				[mmH$_2$O]	[mbar]
		55/50	65/60	70/60	80/60	55/50	65/60	70/60	80/60		
200	2	247	319	328	347	360	498	542	635	309	30,3
	1	241	308	314	329	330	446	478	547	84,74	8,3
300	3	371	480	494	524	545	755	823	968	372	36,5
	1,5	362	464	474	496	501	678	729	834	101,02	9,9
500	4	616	791	810	851	849	1162	1254	1450	419	41,1
	2	604	770	784	814	792	1061	1129	1273	113,381	11,1
800	6	998	1280	1310	1373	1359	1855	1998	2301	718	70,4
	3	980	1249	1271	1318	1275	1705	1812	2037	189,22	18,6
1000	10	1273	1640	1683	1776	1788	2469	2678	3123	1380	135,3
	5	1252	1601	1635	1707	1687	2283	2446	2790	358,5	35,2
1500	15	1855	2394	2462	2605	2651	3675	4000	4689	2295	225,1
	7,5	1825	2338	2392	2504	2506	3407	3664	4204	589,6	57,8
2000	20	2546	3285	3377	3571	3622	5019	5459	6391	2996	293,8
	10	2507	3212	3285	3439	3435	4670	5021	5761	766,42	75,2
2500	20	2988	3856	3965	4196	4296	5951	6475	7586	2436	238,9
	10	2936	3760	3845	4023	4047	5491	5899	6755	624	61,2
3000	20	3748	4827	4955	5226	5307	7314	7928	9230	2836	278,1
	10	3685	4710	4809	5015	5004	6752	7226	8215	723	70,9
4000	20	4842	6232	6396	6740	6892	9475	10263	11913	3896	382,1
	10	4756	6070	6196	6452	6477	8699	9301	10533	989	97,0
5000	20	6362	8166	8363	8775	8891	12137	13081	15058	4707	461,6
	10	6252	7963	8109	8409	8363	11161	11860	13303	1192	116,9

MAXIMUM STORAGE EXPLOITATION WITH CURVED ANTILEGIONELLA® HEAT EXCHANGER




Model	Heated volume: Standard heat exchanger	Storage volume: Heat exchanger for 100% heated volume	Advantage in exploited volume	Advantage in percentage
	[lt]	[lt]	[lt]	[%]
200	165	190	25	**13%**
300	251	285	34	**12%**
500	438	485	47	**10%**
800	694	790	96	**12%**
1000	907	995	88	**9%**




Model	Heated volume: Standard heat exchanger	Storage volume: Heat exchanger for 100% heated volume	Advantage in exploited volume	Advantage in percentage
	[lt]	[lt]	[lt]	[%]
1500	1224	1445	221	**15%**
2000	1684	1978	294	**15%**
2500	1905	2315	410	**18%**
3000	2438	2921	483	**17%**
4000	3113	3769	656	**17%**
5000	4116	4982	866	**17%**

EXTRA **1 WX**

HEAT EXCHANGERS PRESSURE DROP



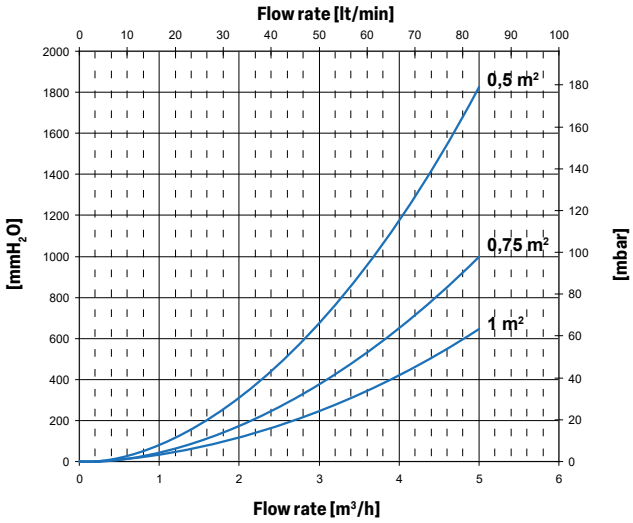

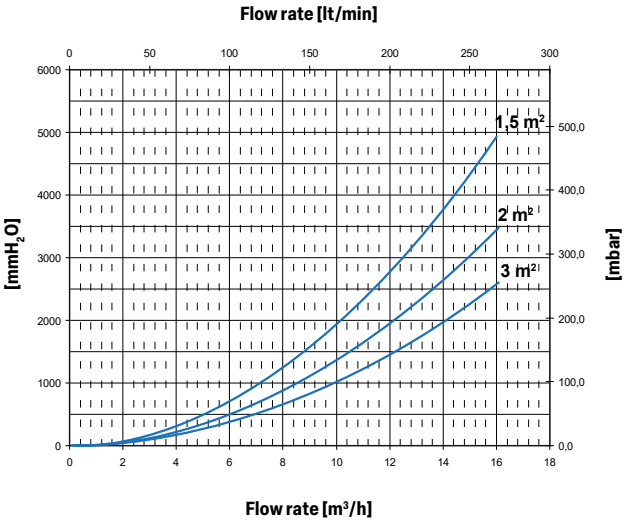

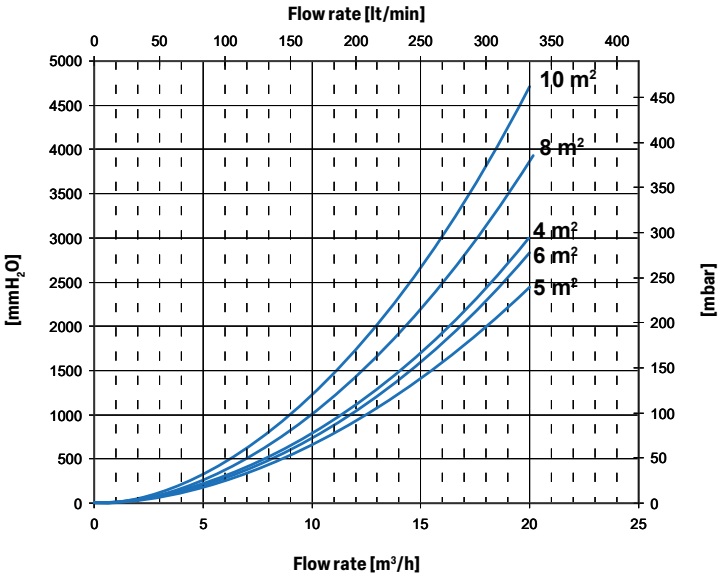

PERFORMANCE CHARTS AT PAGE 150-151

EXAMPLE OF INSTALLATION WITH **EXTRA 1**

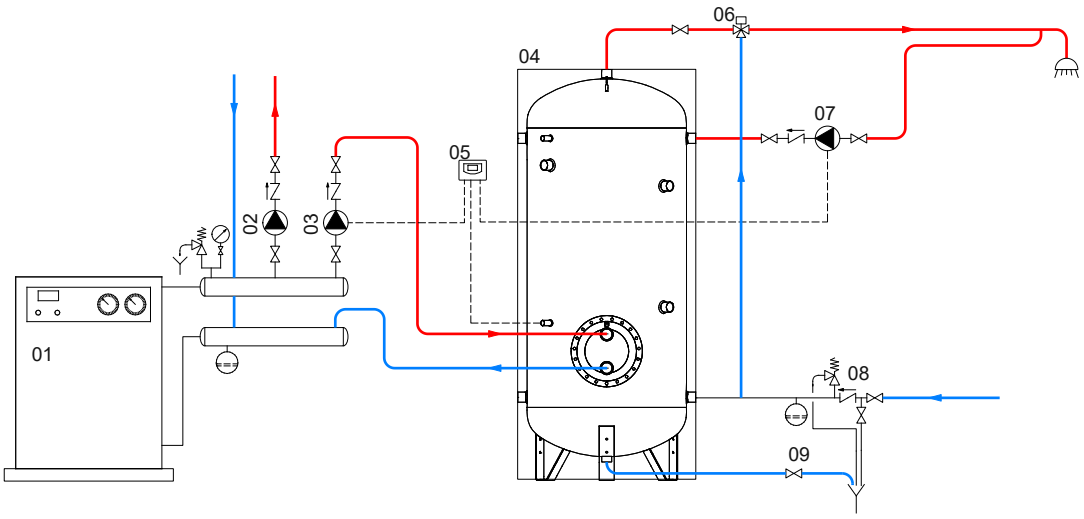

1	Generator	4	EXTRA 1	7	D.H.W. recirculation group
2	Heating system circulation group	5	FULL CONTROL electronic unit / thermostat	8	Hydraulic safety group
3	D.H.W. circulation group	6	Thermostatic mixing valve	9	Blowdown valve

The following schemes are purely illustrative. To realize the installation, always refer to a qualified technician.

EXTRA **1 COMPACT**

POLYWARM® COATED CALORIFIERS, SUITABLE FOR LOW-CEILINGED ROOM, WITH 1 EXTRACTABLE STAINLESS STEEL HEAT EXCHANGER



APPLICATION
Production and storage of domestic hot water (DHW).
Suitable for low-ceilinged room.
MATERIAL
Mild steel Polywarm® coated (Attestation ACS - EN 16421)
HEAT EXCHANGER
Stainless steel 316L Antilegionella® heat exchanger, with tubes bent to the bottom
INSULATION (DISMOUNTABLE)
NOFIRE® polyester fleece 100% made of recyclable material, with high thermal insulation. Fire resistance class B-s2d0 according to EN 13501. Grey PVC external lining.

CATHODE PROTECTION
Nr. 2 magnesium anodes.
DRAIN
External confluence through drain pipe.
GASKET- FLANGE PLATE
Silicone gaskets suitable for water intended for human consumption (tested according to 98/83/CE), max temperature up to 200°C. Mild steel exchanger head with anticorrosion treatment.
WARRANTY
5 years (See general sales conditions and warranty)
ACCESSORIES AND SPARE PARTS
See Accessories section for the entire list.

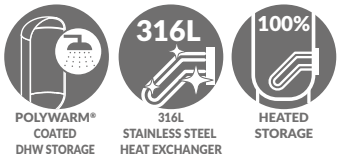

		Model	Art. Nr.	Heat exchangers surface [m²]	ErP ENERGY EFFICIENCY CLASS
		**1500**	3072162360537	3	**C**
		2000	3072162360538	4	**C**
		2500	3072162360513	5	
		3000	3072162360509	6	
		4000	3072162360510	8	

EXTRA 1 COMPACT WXC
DISMOUNTABLE SOFT FLEECE INSULATION

ACCESSORIES

ELECTRIC IMMERSION HEATERS



Mod.	Heated volume by electric immersion heater [lt]	MONOPHASE 1,5 kW	MONOPHASE 2 kW	MONOPHASE 3 kW	THREEPHASE 4 kW	THREEPHASE 5 kW	THREEPHASE 6 kW	THREEPHASE 9 kW	THREEPHASE 12 kW
		5240000000051	5240000000052	5240000000053	5240000000047	5240000000048	5240000000049	5240000000050	5240000000031
		Ignition time from 10 °C to 45 °C with electric immersion heaters [min]			Ignition time from 10 °C to 45 °C with electric immersion heaters [min]				
1500	443	793	595	396	297	238	198	132	99
2000	577	1033	775	517	387	310	258	172	129
2500	797	1428	1071	714	535	428	357	238	178
3000	874	1565	1173	782	587	469	391	261	196
4000	924	1655	1241	828	621	497	414	276	207

FULL CONTROL electronic unit (mounted on tank)

Art. Nr.	for models
5220280000004	WXC



Thermometer

Art. Nr.
5032240000107
5 units box



Titanium anode

Art. Nr.	Model
5200000000011	1500
5200000000013	2000÷4000



Products designed and manufactured for using within temperature and pressure limits in accordance to Art. 4.3 Directive 2014/68/EU (P.E.D.)

EXTRA **1 COMPACT**

POLYWARM® COATED CALORIFIERS, SUITABLE FOR LOW-CEILINGED ROOM, WITH 1 EXTRACTABLE STAINLESS STEEL HEAT EXCHANGER

STORAGE		HEAT EXCHANGER	
Pmax	Tmax	Pmax	Tmax
6 bar	90 °C	12 bar	110 °C

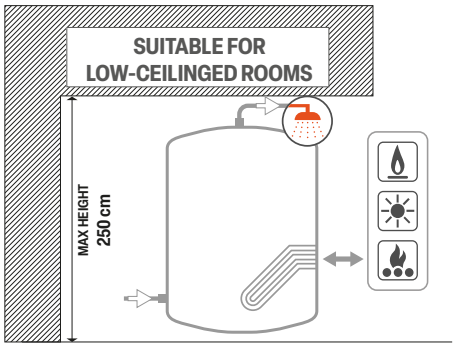

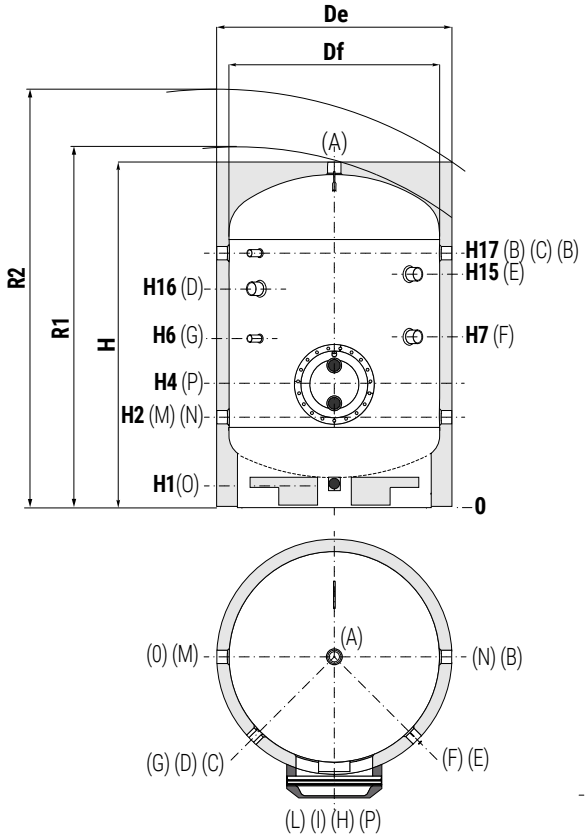

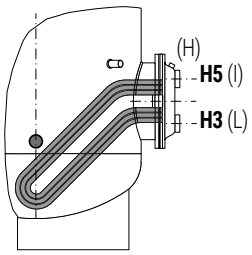

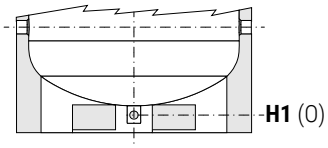

A	Domestic hot water outlet G 2" F
B	Recirculation / Domestic hot water outlet G 2" F
C	Connection for instrumentation G 1/2" F
D	Connection for electric immersion heater G 2" F
E	Connection for 2nd magnesium anode G 1"1/4 F
F	Connection for magnesium anode G 1" 1/4 F
G	Connection for instrumentation G 1/2" F
H	Heat exchanger drain G 3/8" F
I	Primary circuit inlet G 2" F
L	Primary circuit outlet G 2" F
M	Domestic cold water circuit inlet G 2" F
N	Alternative domestic cold water circuit inlet or connection for more tanks in series G 2" F
O	Drain 1" F
P	Flange

All models are equipped with a practical skirt support which facilitate the handling with transpallets and forklifts. Also, discharge piping already mounted to allow total emptying.

Model	Volume	Weight	De	DF	H	R1	R2	H1	H2
	[lt]	[kg]	[mm]						
1500	1509	221	1360	1100	1992	2104	2420	91	467
2000	2012	300	1510	1250	2111	2251	2610	140	551
2500	2627	393	1500	1400	2125	2363	2610	114	570
3000	3029	472	1600	1500	2140	2410	2680	109	575
4000	3990	565	1700	1600	2415	2678	2960	94	580

Model	H4	H5	H6	H7	H15	H16	H17	P
	[mm]							Connections F
1500	692	782	867	942	//	1377	1557	Øi300/Øe380
2000	776	881	951	976	1566	1482	1641	Øi350/Øe430
2500	795	900	970	975	1585	1488	1660	Øi350/Øe430
3000	800	905	975	980	1600	1520	1675	Øi350/Øe430
4000	835	940	1010	1015	1855	1765	1920	Øi350/Øe430

Net volume data according to EN 15332 available on product label.

Products designed and manufactured for using within temperature and pressure limits in accordance to Art. 4.3 Directive 2014/68/EU (P.E.D.)

EXTRA **1 COMPACT**

HEAT EXCHANGERS TECHNICAL DATA



Cordivari heat exchangers, with tubes bent to the bottom, are able to heat the complete volume in an homogeneus way.
Energy storaging is therefore improved and ignition time data refer to the complete volume of the tank, while in traditional straight heat exchangers equipped calorifiers, a range between 9-17% of the volume remains cold.

Model	Primary flow rate	Ignition time (minutes) from 10 °C to t2 and primary at T1				Maximum power exchange (kW) with primary at T1, secondary within 10-45 °C and constant use of DHW production				DHW continuous production lt/h within 10-45 °C and primary at T1HW production			
	[m^3/h]	T1/t2				T1				T1			
		55/50	65/60	70/60	80/60	55	65	70	80	55	65	70	80
1500	15	125	125	85	54	51	81	98	133	1256	2022	2428	3290
	7,5	152	152	105	67	44	68	81	108	1075	1687	2008	2684
2000	20	123	123	84	53	69	111	133	180	1699	2738	3288	4453
	10	148	148	103	65	59	93	111	148	1465	2302	2741	3665
2500	20	134	134	92	58	69	111	133	180	1699	2738	3288	4453
	10	164	164	114	73	59	93	111	148	1465	2302	2741	3665
3000	20	130	130	90	57	100	159	190	255	2461	3926	4694	6321
	10	162	162	113	73	84	130	154	204	2082	3224	3817	5053
4000	20	133	133	92	59	131	207	247	330	3236	5121	6105	8168
	10	170	170	119	77	110	168	198	260	2718	4151	4903	6443

LOWER
HEAT EXCHANGER

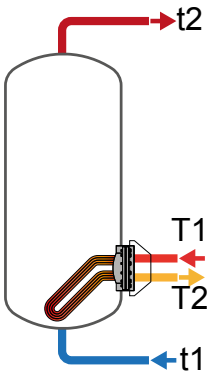

Model	Primary flow rate	DHW produced in the first 10 minutes in lt/10' input 10 °C output 45 °C, storage at t2 and primary at T1				DHW produced in the first hour in lt/60' input 10 °C output 45 °C, storage at t2 and primary at T1				Heat exchanger pressure drop	
	[m^3/h]	T1/t2				T1/t2				[mmH_2O]	[mbar]
		55/50	65/60	70/60	80/60	55/50	65/60	70/60	80/60		
1500	15	1927	2484	2552	2695	2723	3765	4090	4779	2295	225,1
	7,5	1897	2428	2482	2594	2578	3497	3754	4294	589,6	57,8
2000	20	2573	3319	3411	3605	3649	5053	5493	6425	2996	293,8
	10	2534	3247	3320	3474	3462	4704	5056	5795	766,42	75,2
2500	20	3276	4198	4289	4484	4352	5932	6372	7304	2436	238,9
	10	3237	4125	4198	4352	4165	5583	5934	6673	624	61,2
3000	20	3862	4969	5097	5368	5420	7455	8069	9371	2836	278,1
	10	3798	4852	4950	5156	5117	6893	7368	8357	723	70,9
4000	20	5090	6542	6706	7050	7140	9785	10573	12223	3896	382,1
	10	5004	6380	6506	6762	6725	9009	9611	10843	989	97,0

MAXIMUM STORAGE EXPLOITATION WITH CURVED ANTILEGIONELLA® HEAT EXCHANGER





Model	Heated volume: Standard heat exchanger	Storage volume: Heat exchanger for 100% heated volume	Advantage in exploited volume	Advantage in percentage
	[lt]	[lt]	[lt]	[%]
1500	1224	1445	221	**15%**
2000	1684	1978	294	**15%**
2500	1905	2315	410	**18%**
3000	2438	2921	483	**17%**
4000	3113	3769	656	**17%**

EXTRA **1 COMPACT**

HEAT EXCHANGERS PRESSURE DROP



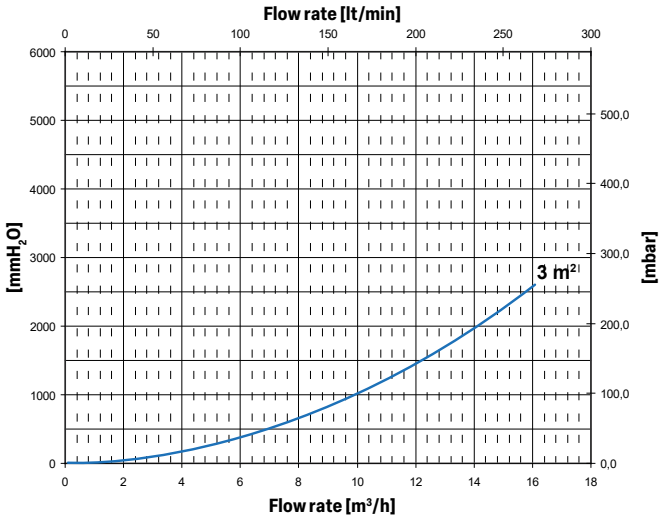

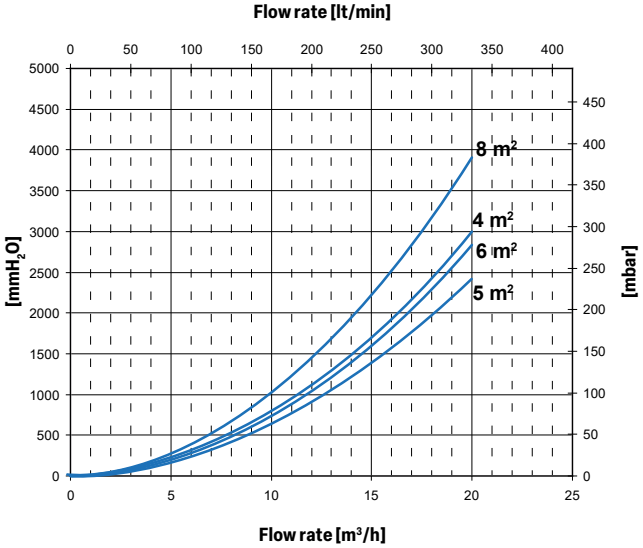

PERFORMANCE CHARTS AT PAGE 150-151

EXAMPLE OF INSTALLATION WITH **EXTRA 1 COMPACT**

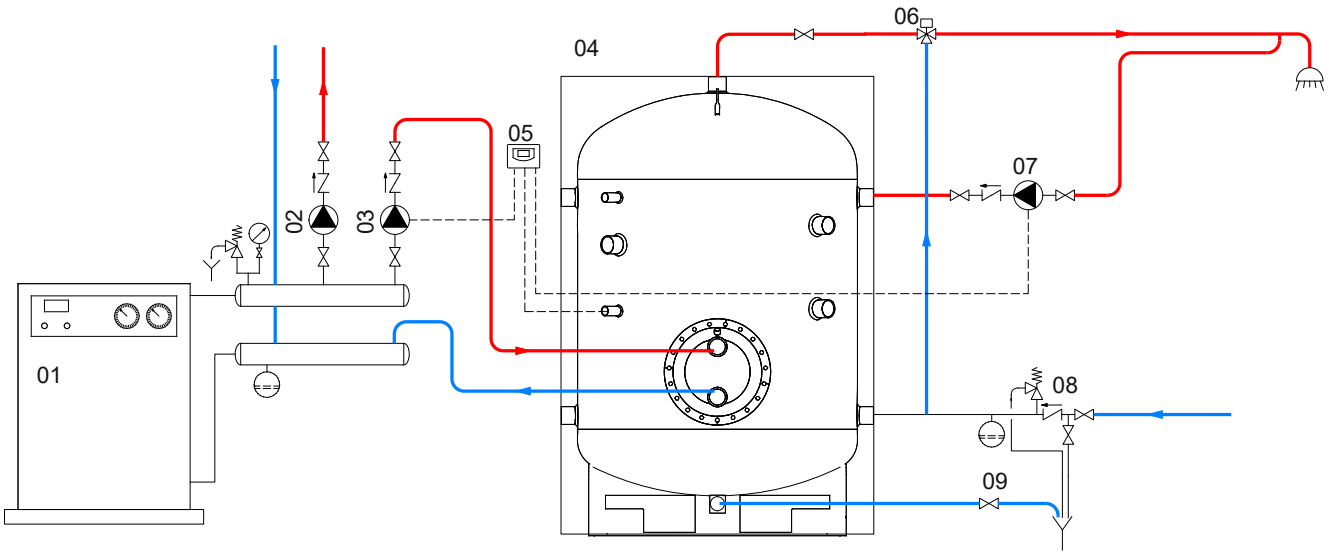

01	Generator	04	EXTRA 1 COMPACT	07	D.H.W. recirculation group
02	Heating system circulation group	05	FULL CONTROL electronic unit / thermostat	08	Hydraulic safety group
03	D.H.W. circulation group	06	Thermostatic mixing valve	09	Blowdown valve

The following schemes are purely illustrative. To realize the installation, always refer to a qualified technician.

EXTRA **2 WX**

POLYWARM® COATED CALORIFIERS WITH 2 EXTRACTABLE STAINLESS STEEL HEAT EXCHANGERS



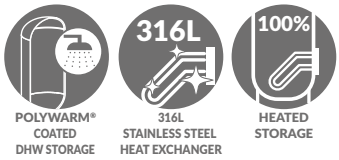

APPLICATION
Production and storage of domestic hot water (DHW).
MATERIAL
Mild steel Polywarm® coated (Attestation ACS - EN 16421)
HEAT EXCHANGER
Nr. 2 Stainless steel 316L heat exchangers (upper: straight - lower: Antilegionella® with tubes bent to the bottom)
INSULATION
HARD: High thermal insulation with ecological polyurethane hard foam.
SOFT (DISMOUNTABLE): NOFIRE® polyester fleece 100% made of recyclable material, with high thermal insulation. Fire resistance class B-s2d0 according to EN 13501.
Grey PVC external lining.

CATHODE PROTECTION
Magnesium anode. Models > 1500 Nr. 2 magnesium anodes.
DRAIN
External confluence through drain connection. Models > 1000 external confluence through drain pipe.
GASKET- FLANGE PLATE
Silicone gaskets suitable for water intended for human consumption (tested according to 98/83/CE), max temperature up to 200°C. Mild steel exchanger head with anticorrosion treatment.
WARRANTY
5 years (See general sales conditions and warranty)
ACCESSORIES AND SPARE PARTS
See Accessories section for the entire list.

		Model	Art. Nr.	Heat exchangers surface Lower [m²]	Heat exchangers surface Upper [m²]	ErP ENERGY EFFICIENCY CLASS
		**200**	3084162360001	0,5	0,5	**B**
		300	3084162360002	0,75	0,75	**C**
		500	3084162360003	1,5	1,5	**C**
		800	3084162360004	2	2	**B**
		1000	3084162360005	3	2	**C**
		1500	3084162360006	3	3	**C**
		2000	3084162360007	4	4	**B**
		500	3082162360133	1,5	1,5	**C**
		800	3082162360134	2	2	**C**
		1000	3082162360135	3	2	**C**
		1500	3082162360136	3	3	**C**
		2000	3082162360137	4	4	**C**
		2500	3082162360113	5	5	
		3000	3082162360108	6	6	
		4000	3082162360110	8	8	
		5000	3082162360112	10	10	

EXTRA 2 WXB
HARD FOAM INSULATION

EXTRA 2 WXC
DISMOUNTABLE SOFT FLEECE INSULATION

ACCESSORIES

ELECTRIC IMMERSION HEATERS



Mod.	Heated volume by electric immersion heater [lt]	MONOPHASE 1,5 kW	MONOPHASE 2 kW	MONOPHASE 3 kW	THREEPHASE 4 kW	THREEPHASE 5 kW	THREEPHASE 6 kW	THREEPHASE 9 kW	THREEPHASE 12 kW
		5240000000051	5240000000052	5240000000053	5240000000047	5240000000048	5240000000049	5240000000050	5240000000031
		Ignition time from 10 °C to 45 °C with electric immersion heaters [min]			Ignition time from 10 °C to 45 °C with electric immersion heaters [min]				
200	49	87	65	44	33	//	//	//	//
300	76	136	102	68	51	//	//	//	//
500	127	228	171	114	85	68	57	//	//
800	178	318	239	159	120	96	80	//	//
1000	243	436	327	218	163	131	109	73	54
1500	288	516	387	258	194	155	129	86	65
2000	443	793	595	396	297	238	198	132	99
2500	577	1033	775	517	387	310	258	172	129
3000	577	1033	775	517	387	310	258	172	129
4000	797	1428	1071	714	535	428	357	238	178
5000	1040	1864	1398	932	699	559	466	311	233

FULL CONTROL electronic unit (mounted on tank)

Art. Nr.	for models
5220280000004	WXC
5220280000005	WXB



HEAT MANAGER + electric immersion heater 1,5 kW + probe +3m cable

Art. Nr.	Output [kW]
5240000000074	1,5
5240000000075	2
5240000000076	3



Titanium anode

See Accessories section



Products designed and manufactured for using within temperature and pressure limits in accordance to Art. 4.3 Directive 2014/68/EU (P.E.D.)

EXTRA **2 WX**

POLYWARM® COATED CALORIFIERS WITH 2 EXTRACTABLE STAINLESS STEEL HEAT EXCHANGERS

	STORAGE		HEAT EXCHANGER	
Model	Pmax	Tmax	Pmax	Tmax
200 ÷ 1000	8 bar	90 °C	12 bar	110 °C
1500 ÷ 5000	6 bar			

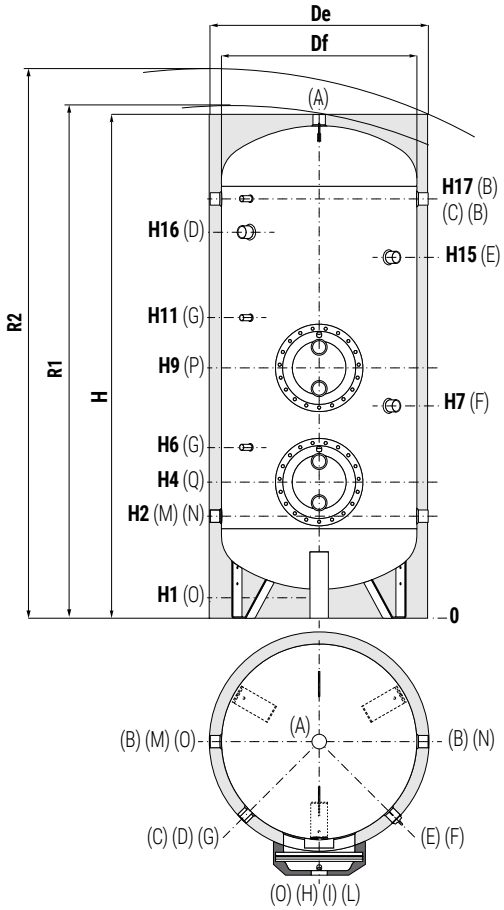

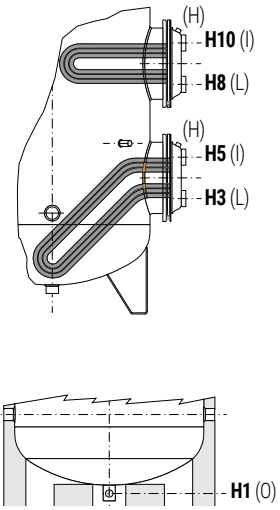

Models from 1500 to 5000 are equipped with a practical skirt support which facilitate the handling with transpallets and forklifts. Also, discharge piping already mounted to allow total emptying.

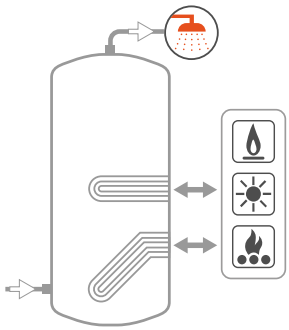

A	Domestic hot water outlet
B	Recirculation / Domestic hot water outlet
C	Connection for instrumentation G 1/2" F
D	Connection for electric immersion heater G 1" 1/2 F for models > 800 connection G 2" F
E	Connection for 2nd magnesium anode G 1"1/4 F (only for models > 1500)
F	Connection for magnesium anode G 1" 1/4 F
G	Connection for instrumentation G 1/2" F
H	Heat exchanger drainG 3/8" F
I	Primary circuit inlet
L	Primary circuit outlet
M	Domestic cold water circuit inlet
N	Alternative domestic cold water circuit inlet or connection for more tanks in series
O	Drain
P	Upper heat exchanger flange
Q	Lower heat exchanger flange

EXTRA 2 WXB - HARD FOAM INSULATION

Model	Volume	Weight	De	H	R2	H1	H2	H3	H4	H5	H6	H7	H8	H9	H10	H11	H15	H16	H17	P-Q	M-N B	A	O	I-L
	[lt]	[kg]	[mm]																		Connections F			
200	193	70	550	1449	1560	85	325	360	410	460	520	650	810	860	910	970	//	1075	1185	Øi220/Øe300	1"1/4	1"1/4	1"1/4	1"
300	295	84	650	1499	1640	85	350	385	435	485	545	735	835	885	935	995	//	1100	1210	Øi220/Øe300	1"1/4	1"1/4	1"1/4	1"
500	503	112	750	1800	1960	85	375	410	460	510	570	760	860	910	960	1020	//	1329	1485	Øi220/Øe300	1"1/4	1"1/4	1"1/4	1"
800	799	177	900	2135	2330	85	405	450	540	630	690	870	1000	1090	1180	1240	//	1610	1765	Øi300/Øe380	1"1/4	1"1/4	1"1/4	2"
1000	1047	226	1000	2221	2450	105	458	503	593	683	743	993	1053	1143	1233	1293	//	1664	1818	Øi300/Øe380	1"1/2	1"1/2	1"1/2	2"
1500	1450	269	1100	2415	2660	109	440	585	675	765	825	1075	1160	1250	1340	1400	//	1895	2050	Øi300/Øe380	1"1/2	2"	1"	2"
2000	1985	337	1300	2492	2820	91	467	587	692	797	867	842	1157	1262	1367	1437	1952	1877	2057	Øi350/Øe430	2"	2"	1"	2"

Net volume data according to EN 15332 available on product label.

EXTRA 2 WXC - DISMOUNTABLE SOFT FLEECE INSULATION

Mod.	Volume	Weight	De	Df	H	R1	R2	H1	H2	H3	H4	H5	H6	H7	H8	H9	H10	H11	H15	H16	H17	P-Q	M-N B	A	O	I-L
	[lt]	[kg]	[mm]																				Connections F			
500	503	105	870	650	1841	1998	2090	101	416	451	501	551	611	801	901	951	1001	1061	//	1370	1526	Øi220/Øe300	1"1/4	1"1/4	1"1/4	1"
800	799	177	970	750	2188	2220	2400	113	433	478	568	658	718	898	1028	1118	1208	1268	//	1638	1793	Øi300/Øe380	1"1/4	1"1/4	1"1/4	2"
1000	1047	226	1070	850	2242	2270	2490	101	454	499	589	679	739	989	1049	1139	1229	1289	//	1660	1814	Øi300/Øe380	1"1/2	1"1/2	1"1/4	2"
1500	1450	269	1210	950	2440	2495	2730	109	440	585	675	765	825	1075	1160	1250	1340	1400	//	1895	2050	Øi300/Øe380	1"1/2	2"	1"1/4	2"
2000	1985	337	1360	1100	2492	2570	2850	91	467	587	692	797	867	842	1157	1262	1367	1437	1952	1877	2057	Øi350/Øe430	2"	2"	1"1/2	2"
2500	2322	399	1350	1250	2311	2480	2690	140	551	671	776	881	951	976	1271	1376	1481	1551	1816	1732	1891	Øi350/Øe430	2"	2"	1"	2"
3000	2928	464	1350	1250	2811	2950	3130	140	551	731	836	941	1011	1036	1371	1476	1581	1651	2316	2232	2391	Øi350/Øe430	2"	2"	1"	2"
4000	3776	618	1500	1400	2875	3050	3250	114	570	750	855	960	1030	1035	1390	1495	1600	1670	2315	2238	2410	Øi350/Øe430	2"	2"	1"	2"
5000	4990	768	1700	1600	2915	3130	3380	94	580	750	855	960	1030	1035	1400	1505	1610	1680	2335	2265	2420	Øi350/Øe430	2"	2"	1"	2"

Net volume data according to EN 15332 available on product label.

Products designed and manufactured for using within temperature and pressure limits in accordance to Art. 4.3 Directive 2014/68/EU (P.E.D.)

EXTRA **2 WX**

HEAT EXCHANGERS TECHNICAL DATA



Cordivari heat exchangers, with tubes bent to the bottom, are able to heat the complete volume in an homogeneus way.
Energy storaging is therefore improved and ignition time data refer to the complete volume of the tank, while in traditional straight heat exchangers equipped calorifiers, a range between 9-17% of the volume remains cold.

LOWER
HEAT EXCHANGER

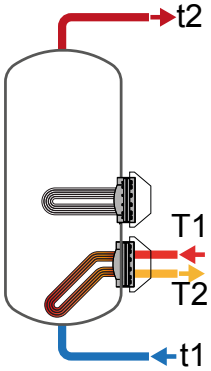

Model	Primary flow rate	Ignition time (minutes) from 10 °C to t2 and primary at T1				Maximum power exchange (kW) with primary at T1, secondary within 10-45 °C and constant use of DHW production				DHW continuous production lt/h within 10-45 °C and primary at T1HW production			
	[m³/h]	T1/t2				T1				T1			
		55/50	65/60	70/60	80/60	55	65	70	80	55	65	70	80
200	2	113	113	77	49	7,3	12	14	18	178	283	338	455
	1	147	148	102	65	6	9	11	13,9	141	218	258	344
300	3	112	113	76	48	11	17	21	28	274	435	520	701
	1,5	145	146	102	65	9	14	16	21,6	219	339	402	534
500	6	90	90	62	39	23	37	44	59	571	909	1088	1467
	3	114	115	80	51	19	29	35	46	466	722	856	1137
800	10	101	101	69	44	33	53	64	86	815	1310	1572	2128
	5	124	125	86	55	28	44	52	69	688	1077	1282	1712
1000	15	82	83	56	36	51	82	98	133	1257	2024	2429	3293
	7,5	101	100	69	44	44	68	81	108	1076	1689	2010	2685
1500	15	120	119	82	51	51	81	98	133	1256	2022	2428	3290
	7,5	145	146	100	64	44	68	81	108	1075	1687	2008	2684
2000	20	121	122	83	52	69	111	133	180	1699	2738	3288	4453
	10	146	147	101	65	59	93	111	148	1465	2302	2741	3665
2500	20	118	119	81	51	69	111	133	180	1699	2738	3288	4453
	10	145	146	101	65	59	93	111	148	1465	2302	2741	3665
3000	20	128	127	87	55	100	159	190	255	2461	3926	4694	6321
	10	156	157	110	70	84	130	154	204	2082	3224	3817	5053
4000	20	126	127	87	56	131	207	247	330	3236	5121	6105	8168
	10	159	161	112	73	110	168	198	260	2718	4151	4903	6443
5000	20	137	138	96	61	162	253	301	401	3992	6270	7450	9921
	10	176	179	125	82	135	204	239	312	3332	5049	5923	7727

Model	Primary flow rate	DHW produced in the first 10 minutes in lt/10' input 10 °C output 45 °C, storage at t2 and primary at T1				DHW produced in the first hour in lt/60' input 10 °C output 45 °C, storage at t2 and primary at T1				Heat exchanger pressure drop	
	[m³/h]	T1/t2				T1/t2				[mmH$_2$O]	[mbar]
		55/50	65/60	70/60	80/60	55/50	65/60	70/60	80/60		
200	2	247	319	328	347	360	498	542	635	309	30,3
	1	241	308	314	329	330	446	478	547	84,74	8,3
300	3	371	480	494	524	545	755	823	968	372	36,5
	1,5	362	464	474	496	501	678	729	834	101,02	9,9
500	6	649	844	874	937	1011	1420	1563	1866	718	70,4
	3	632	813	836	882	927	1270	1378	1602	189,22	18,6
800	10	1039	1347	1391	1483	1555	2177	2386	2831	1380	135,3
	5	1018	1308	1342	1414	1453	1990	2154	2498	358,5	35,2
1000	15	1347	1759	1826	1970	2143	3041	3365	4056	2295	225,1
	7,5	1316	1703	1756	1869	1998	2773	3029	3569	589,6	57,8
1500	15	1855	2394	2462	2605	2651	3675	4000	4689	2295	225,1
	7,5	1825	2338	2392	2504	2506	3407	3664	4204	589,6	57,8
2000	20	2546	3285	3377	3571	3622	5019	5459	6391	2996	293,8
	10	2507	3212	3285	3439	3435	4670	5021	5761	766,42	75,2
2500	20	2927	3761	3852	4046	4003	5495	5935	6867	2436	238,9
	10	2888	3688	3761	3915	3815	5146	5497	6236	624	61,2
3000	20	3748	4827	4955	5226	5307	7314	7928	9230	2836	278,1
	10	3685	4710	4809	5015	5004	6752	7226	8215	723	70,9
4000	20	4842	6232	6396	6740	6892	9475	10263	11913	3896	382,1
	10	4756	6070	6196	6452	6477	8699	9301	10533	989	97,0
5000	20	6362	8166	8363	8775	8891	12137	13081	15058	4707	461,6
	10	6252	7963	8109	8409	8363	11161	11860	13303	1192	116,9



UPPER
HEAT EXCHANGER

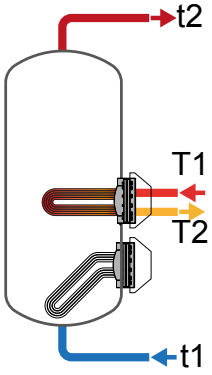

Model	Primary flow rate	Ignition time (minutes) from 10 °C to t2 and primary at T1				Maximum power exchange (kW) with primary at T1, secondary within 10-45 °C and constant use of DHW production				DHW continuous production lt/h within 10-45 °C and primary at T1HW production			
	[m³/h]	T1/t2				T1				T1			
		55/50	65/60	70/60	80/60	55	65	70	80	55	65	70	80
200	2	57	57	39	25	7	11	14	18	179	283	339	456
	1	74	75	52	33	6	9	11	14	142	219	259	344
300	3	57	57	39	25	11	18	21	28	275	436	521	702
	1,5	73	73	52	33	9	14	16	22	220	340	403	535
500	6	52	52	36	23	23	37	44	59	573	911	1090	1468
	3	66	55	46	30	19	29	35	46	468	724	857	1139
800	10	62	62	42	27	33	53	64	86	817	1312	1573	2129
	5	75	76	53	34	28	44	52	69	690	1079	1284	1715
1000	10	80	80	55	35	32	51	61	82	783	1252	1501	2029
	5	100	100	70	45	26	41	48	65	647	1008	1198	1599
1500	15	68	68	47	30	51	82	98	133	1259	2026	2430	3295
	7,5	82	83	57	37	44	68	81	109	1077	1690	2011	2687
2000	20	70	70	48	30	69	111	133	180	1702	2741	3293	4463
	10	84	85	59	37	59	93	111	148	1468	2306	2744	3668
2500	20	59	59	40	25	84	134	160	216	2069	3313	3969	5358
	10	71	72	50	32	71	111	131	174	1758	2738	3249	4318
3000	20	71	72	49	31	100	159	190	255	2465	3931	4698	6325
	10	88	89	62	40	84	130	154	204	2086	3229	3821	5057
4000	20	71	72	50	32	131	207	247	330	3242	5126	6112	8179
	10	89	90	63	41	110	168	198	260	2723	4167	4909	6448
5000	20	78	78	54	35	162	253	301	400	3998	6275	7459	9924
	10	99	100	71	46	135	204	239	312	3338	5055	5930	7735

Model	Primary flow rate	DHW produced in the first 10 minutes in lt/10' input 10 °C output 45 °C, storage at t2 and primary at T1				DHW produced in the first hour in lt/60' input 10 °C output 45 °C, storage at t2 and primary at T1				Heat exchanger pressure drop	
	[m³/h]	T1/t2				T1/t2				[mmH$_2$O]	[mbar]
		55/50	65/60	70/60	80/60	55/50	65/60	70/60	80/60		
200	2	140	184	194	213	253	364	408	502	294,35	28,9
	1	133	174	180	194	223	312	344	412	80,5	7,9
300	3	215	284	298	328	389	560	628	773	355,7	34,9
	1,5	206	268	279	301	345	483	534	639	95,97	9,4
500	6	418	555	585	648	781	1132	1275	1577	682	66,9
	3	400	524	546	593	697	982	1088	1314	179	17,6
800	10	689	910	954	1046	1207	1741	1950	2395	1311	128,6
	5	668	871	905	977	1105	1555	1719	2063	341	33,4
1000	10	816	1066	1107	1195	1312	1859	2058	2480	1311	128,6
	5	794	1025	1057	1124	1203	1664	1816	2136	341	33,4
1500	15	1149	1512	1579	1723	1947	2795	3118	3810	2181	213,9
	7,5	1119	1456	1509	1622	1801	2526	2783	3324	560	54,9
2000	20	1595	2095	2187	2382	2672	3831	4273	5209	2846	279,1
	10	1556	2023	2096	2250	2485	3483	3834	4573	728	71,4
2500	20	1652	2186	2296	2527	2963	4285	4809	5921	2314	226,9
	10	1600	2091	2176	2354	2714	3825	4233	5089	592	58,1
3000	20	2303	3021	3149	3420	3865	5511	6124	7426	2745	269,2
	10	2240	2904	3003	3209	3561	4949	5423	6411	700	68,6
4000	20	2972	3894	4059	4403	5026	7141	7930	9583	3701	362,9
	10	2886	3735	3858	4115	4610	6374	6967	8198	939	92,1
5000	20	3882	5066	5263	5674	6414	9040	9987	11959	4472	438,6
	10	3772	4863	5008	5309	5886	8064	8764	10208	1132	111,0

EXTRA **2 WX**

HEAT EXCHANGERS PRESSURE DROP





	Lower heat exchangers surface [m²]
200	0,5
300	0,75
500	1,5
800	2
1000	3
1500	3
2000	4
2500	5
3000	6
4000	8
5000	10

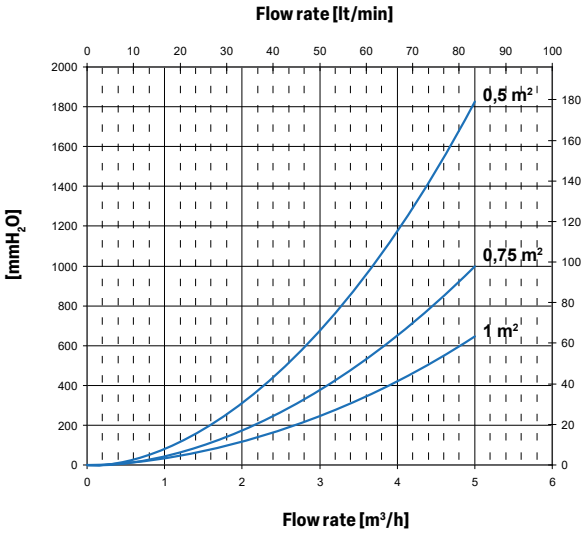

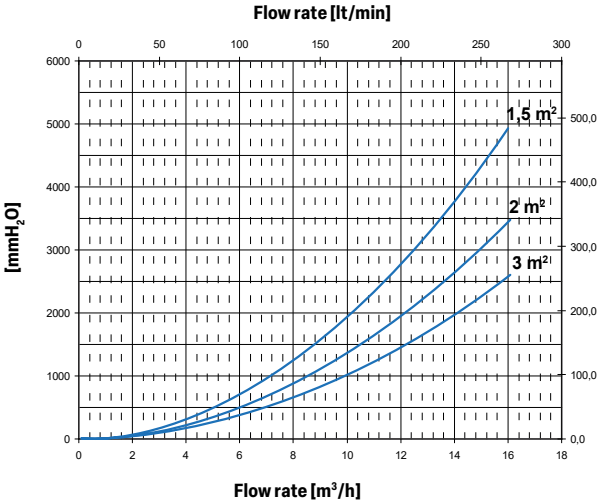

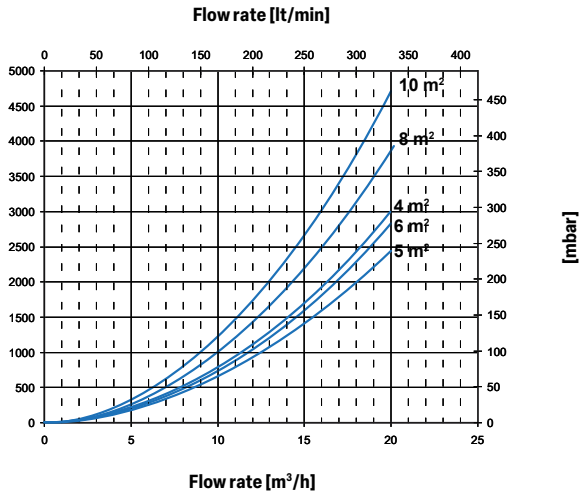

EXTRA **2 WX**

HEAT EXCHANGERS PRESSURE DROP





	Lower heat exchangers surface [m²]
200	0,5
300	0,75
500	1,5
800	2
1000	2
1500	3
2000	4
2500	5
3000	6
4000	8
5000	10

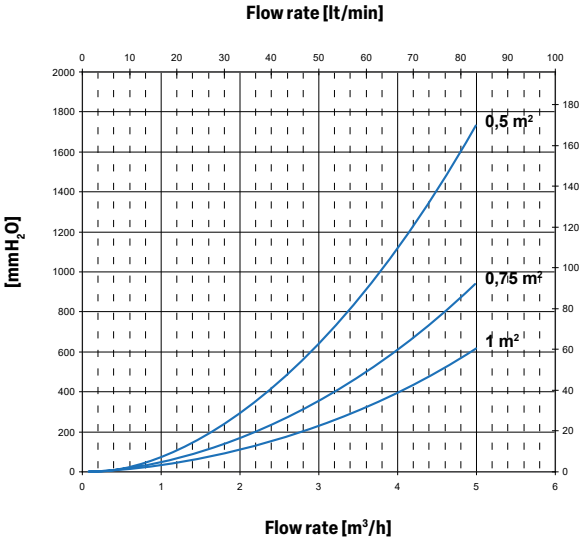

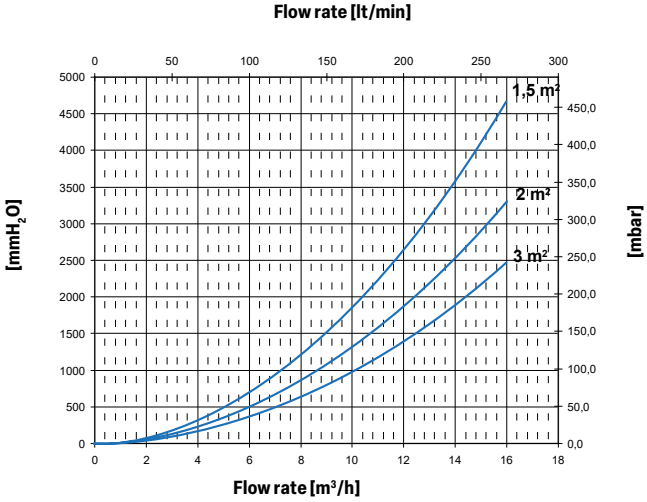

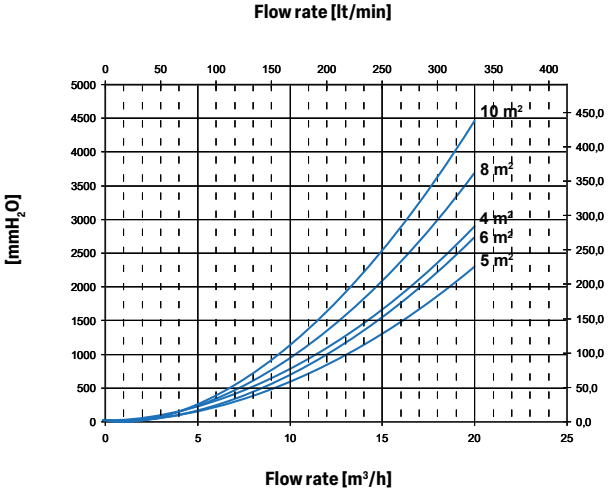

PERFORMANCE CHARTS AT PAGE 150-151

EXAMPLE OF INSTALLATION WITH **EXTRA 2**

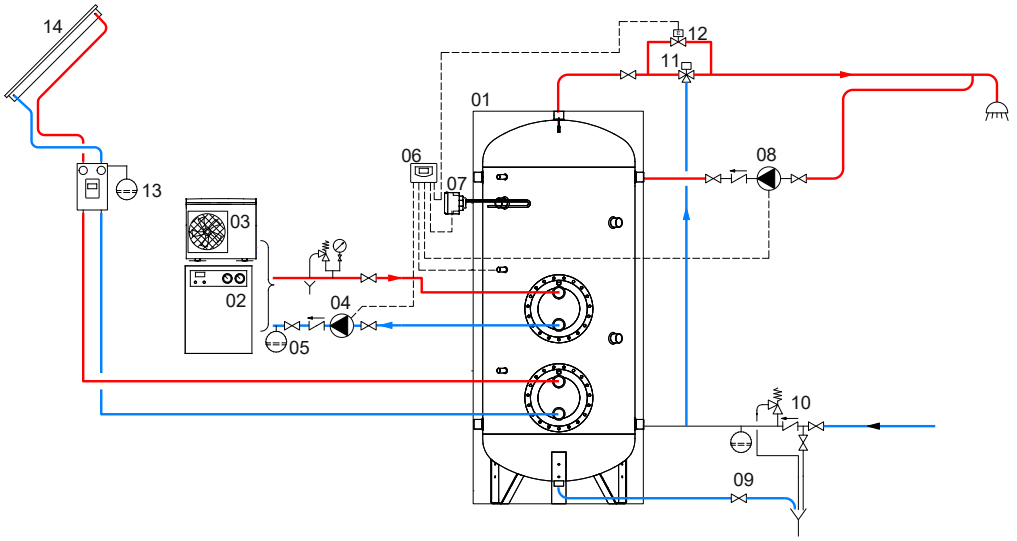

1	Extra 2	5	Expansion vessel	9	Blowdown valve	13	Solar system circulation group
2	Generator	6	FULL CONTROL electronic unit / thermostat	10	Hydraulic safety group	14	Solar panels
3	Generator (Heat pump)	7	Electric immersion heater (optional)	11	Thermostatic mixing valve		
4	Circulation group	8	D.H.W. recirculation group	12	By-pass solenoid valve		

The following schemes are purely illustrative. To realize the installation, always refer to a qualified technician.

EXTRA **3 WX**

POLYWARM® COATED CALORIFIERS WITH 3 EXTRACTABLE STAINLESS STEEL HEAT EXCHANGERS



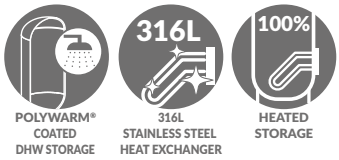

APPLICATION
Production and storage of domestic hot water (DHW).
MATERIAL
Mild steel Polywarm® coated (Attestation ACS - EN 16421)
HEAT EXCHANGER
Nr. 3 Stainless steel 316L heat exchangers (upper and middle: straight - lower: Antilegionella® with tubes bent to the bottom)
INSULATION
SOFT (DISMOUNTABLE): NOFIRE® polyester fleece 100% made of recyclable material, with high thermal insulation. Fire resistance class B-s2d0 according to EN 13501.
Grey PVC external lining.

CATHODE PROTECTION
Nr. 2 magnesium anodes.
DRAIN
External confluence through drain connection.
GASKET- FLANGE PLATE
Silicone gaskets suitable for water intended for human consumption (tested according to 98/83/CE), max temperature up to 200°C. Mild steel exchanger head with anticorrosion treatment.
WARRANTY
5 years (See general sales conditions and warranty)
ACCESSORIES AND SPARE PARTS
See Accessories section for the entire list.





EXTRA 3 WXC
DISMOUNTABLE SOFT FLEECE INSULATION

Model	Art. Nr.	Heat exchangers surface [m²] Lower	Middle	Upper	ErP ENERGY EFFICIENCY CLASS
1500	3092162360136	3	3	1,5	C
2000	3092162360137	4	4	2	C
3000	3092162360109	6	6	3	
5000	3092162360112	10	10	5	

ACCESSORIES

FULL CONTROL electronic unit (mounted on tank)

Art. Nr.	for models
5220280000004	WXC



Thermometer

Art. Nr.
5032240000107
5 units box



Titanium anode

Art. Nr.	Model
5200000000011	1500
5200000000013	2000÷4000



Products designed and manufactured for using within temperature and pressure limits in accordance to Art. 4.3 Directive 2014/68/EU (P.E.D.)

EXTRA **3 WX**

POLYWARM® COATED CALORIFIERS WITH 3 EXTRACTABLE STAINLESS STEEL HEAT EXCHANGERS

STORAGE		HEAT EXCHANGER	
Pmax	Tmax	Pmax	Tmax
6 bar	90 °C	12 bar	110 °C

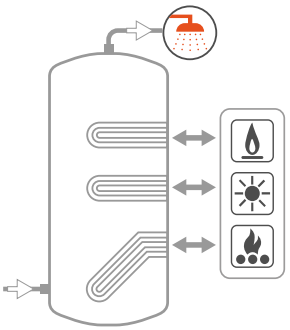

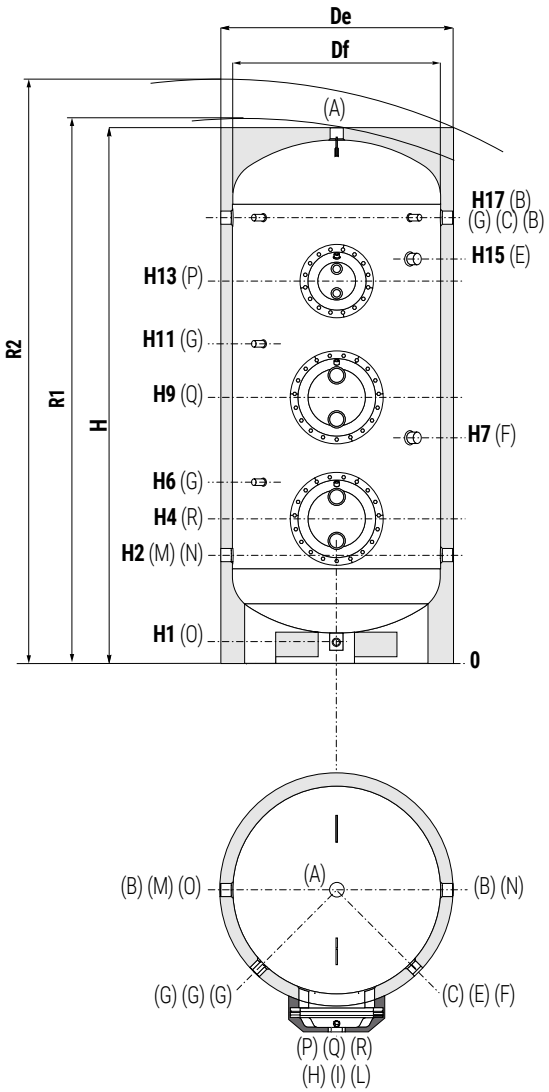

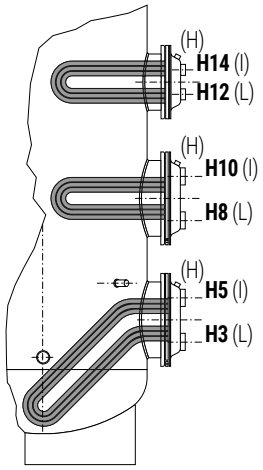

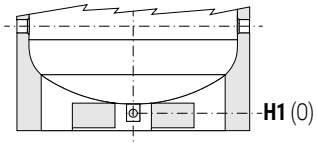

All models are equipped with a practical skirt support which facilitate the handling with transpallets and forklifts. Also, discharge piping already mounted to allow total emptying.

A	Domestic hot water outlet G 2" F
B	Recirculation / Domestic hot water outlet 1"1/2 F for models > 1500 connection G 2" F
C-G	Connection for instrumentation G 1/2" F
E	Connection for 2nd magnesium anode 1"1/4 F (only for models > 1500)
F	Connection for magnesium anode 1"1/4 F
H	Heat exchanger drainG 3/8" F
I	Primary circuit inlet of the upper exchanger G 2" F
L	Primary circuit outlet of the upper exchanger G 2" F
M	Domestic cold water circuit inlet 1"1/2 F for models > 1500 connection G 2" F
N	Alternative domestic cold water circuit inlet or connection for more tanks in series 1"1/2 F for models > 1500 connection G 2" F
O	Drain 1" F
P	Upper heat exchanger flange
Q	Middle heat exchanger flange
R	Lower heat exchanger flange

Model	Volume	Weight	De	Df	H	R1	R2	H1	H2	H3	H4	H5	H6	H7	H8
	[lt]	[kg]	[mm]												
1500	1455	291	1210	950	2440	2495	2730	109	440	585	675	765	825	1075	1160
2000	1991	430	1360	1100	2492	2570	2850	91	467	587	692	797	867	842	1157
3000	2933	557	1350	1250	2811	2950	3130	140	551	731	836	941	1011	1036	1371
5000	4996	882	1700	1600	2915	3130	3380	94	580	750	855	960	1030	1035	1400

Model	H9	H10	H11	H12	H13	H14	H15	H17	Q - R	P
	[mm]									
1500	1250	1340	1400	1785	1875	1965	//	2050	Øi300/Øe380	Øi300/Øe380
2000	1262	1367	1437	1727	1817	1907	1592	2057	Øi350/Øe430	Øi300/Øe380
3000	1476	1581	1651	2086	2176	2266	1926	2391	Øi350/Øe430	Øi300/Øe380
5000	1505	1610	1680	2010	2115	2220	1855	2420	Øi350/Øe430	Øi350/Øe430

Net volume data according to EN 15332 available on product label.

Products designed and manufactured for using within temperature and pressure limits in accordance to Art. 4.3 Directive 2014/68/EU (P.E.D.)

EXTRA **3 WX**

HEAT EXCHANGERS TECHNICAL DATA



Cordivari heat exchangers, with tubes bent to the bottom, are able to heat the complete volume in an homogeneus way.
Energy storaging is therefore improved and ignition time data refer to the complete volume of the tank, while in traditional straight heat exchangers equipped calorifiers, a range between 9-17% of the volume remains cold.

UPPER HEAT EXCHANGER

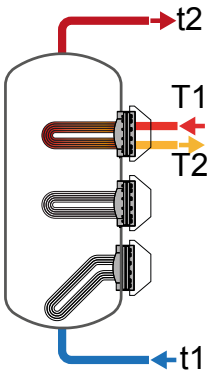

Model	Primary flow rate	Ignition time (minutes) from 10 °C to t2 and primary at T1				Maximum power exchange (kW) with primary at T1, secondary within 10-45 °C and constant use of DHW production				DHW continuous production lt/h within 10-45 °C and primary at T1HW production			
	[m³/h]	T1/t2				T1				T1			
		55/50	65/60	70/60	80/60	55	65	70	80	55	65	70	80
1500	6	69	68	48	30	23	37	44	59	571	909	1088	1466
	3	88	89	61	39	19	29	35	46	465	722	855	1137
2000	10	76	77	52	33	33	53	64	86	815	1309	1572	2128
	5	93	94	65	41	28	44	52	69	688	1077	1281	1712
3000	15	63	63	43	27	51	82	98	133	1256	2023	2429	3293
	7,5	77	77	54	34	44	68	81	109	1075	1688	2009	2685
5000	20	81	81	56	35	84	134	160	216	2066	134	3965	5353
	10	99	100	69	44	71	111	131	174	1755	2734	3244	4314

Model	Primary flow rate	DHW produced in the first 10 minutes in lt/10' input 10 °C output 45 °C, storage at t2 and primary at T1				DHW produced in the first hour in lt/60' input 10 °C output 45 °C, storage at t2 and primary at T1				Heat exchanger pressure drop	
	[m³/h]	T1/t2				T1/t2				[mmH$_2$O]	[mbar]
		55/50	65/60	70/60	80/60	55/50	65/60	70/60	80/60		
1500	6	520	683	713	776	882	1259	1402	1704	682	66,9
	3	503	652	674	721	797	1109	1215	1441	179	17,6
2000	10	811	1062	1106	1199	1327	1891	2102	2547	1311	128,6
	5	790	1024	1058	1130	1226	1706	1869	2214	341	33,4
3000	15	1081	1427	1495	1639	1877	2708	3033	3724	2181	213,9
	7,5	1051	1371	1425	1538	1732	2440	2697	3238	560	54,9
5000	20	2152	2282	2921	3152	3461	2367	5432	6542	2314	226,9
	10	2101	2716	2801	2979	3212	4447	4855	5711	592	58,1

MIDDLE HEAT EXCHANGER

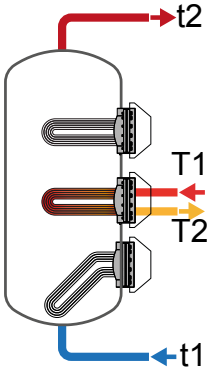

Model	Primary flow rate	Ignition time (minutes) from 10 °C to t2 and primary at T1				Maximum power exchange (kW) with primary at T1, secondary within 10-45 °C and constant use of DHW production				DHW continuous production lt/h within 10-45 °C and primary at T1HW production			
	[m³/h]	T1/t2				T1				T1			
		55/50	65/60	70/60	80/60	55	65	70	80	55	65	70	80
1500	15	68	68	47	30	51	82	98	133	1259	2026	2430	3295
	7,5	82	83	57	37	44	68	81	109	1077	1690	2011	2687
2000	20	70	70	48	30	69	111	133	180	1702	2741	3293	4463
	10	84	85	59	37	59	93	111	148	1468	2306	2744	3668
3000	20	71	72	49	31	100	159	190	255	2465	3931	4698	6325
	10	88	89	62	40	84	130	154	204	2086	3229	3821	5057
5000	20	78	78	54	35	162	253	301	400	3998	6275	7459	9924
	10	99	100	71	46	135	204	239	312	3338	5055	5930	7735

Model	Primary flow rate	DHW produced in the first 10 minutes in lt/10' input 10 °C output 45 °C, storage at t2 and primary at T1				DHW produced in the first hour in lt/60' input 10 °C output 45 °C, storage at t2 and primary at T1				Heat exchanger pressure drop	
	[m³/h]	T1/t2				T1/t2				[mmH$_2$O]	[mbar]
		55/50	65/60	70/60	80/60	55/50	65/60	70/60	80/60		
1500	15	1149	1512	1579	1723	1947	2795	3118	3810	2181,03	213,9
	7,5	1119	1456	1509	1622	1801	2526	2783	3324	560,28	54,9
2000	20	1595	2095	2187	2382	2672	3831	4273	5209	2846,25	279,1
	10	1556	2023	2096	2250	2485	3483	3834	4573	728,1	71,4
3000	20	2303	3021	3149	3420	3865	5511	6124	7426	2745,34	269,2
	10	2240	2904	3003	3209	3561	4949	5423	6411	700,69	68,7
5000	20	3882	5066	5263	5674	6414	9040	9987	11959	4472,31	438,6
	10	3772	4863	5008	5309	5886	8064	8764	10208	290,29	28,5



LOWER
HEAT EXCHANGER

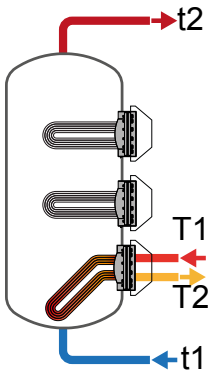

Model	Primary flow rate	Ignition time (minutes) from 10 °C to t2 and primary at T1				Maximum power exchange (kW) with primary at T1, secondary within 10-45 °C and constant use of DHW production				DHW continuous production lt/h within 10-45 °C and primary at T1HW production			
	[m³/h]	T1/t2				T1				T1			
		55/50	65/60	70/60	80/60	55	65	70	80	55	65	70	80
1500	15	120	119	82	51	51	81	98	133	1256	2022	2428	3290
	7,5	145	146	100	64	44	68	81	108	1075	1687	2008	2684
2000	20	121	122	83	52	69	111	133	180	1699	2738	3288	4453
	10	146	147	101	65	59	93	111	148	1465	2302	2741	3665
3000	20	128	127	87	55	100	159	190	255	2461	3926	4694	6321
	10	156	157	110	70	84	130	154	204	2082	3224	3817	5053
5000	20	137	138	96	61	162	253	301	401	3992	6270	7450	9921
	10	176	179	125	82	135	204	239	312	3332	5049	5923	7727

Model	Primary flow rate	DHW produced in the first 10 minutes in lt/10' input 10 °C output 45 °C, storage at t2 and primary at T1				DHW produced in the first hour in lt/60' input 10 °C output 45 °C, storage at t2 and primary at T1				Heat exchanger pressure drop	
	[m³/h]	T1/t2				T1/t2				[mmH$_2$O]	[mbar]
		55/50	65/60	70/60	80/60	55/50	65/60	70/60	80/60		
1500	15	1855	2394	2462	2605	2651	3675	4000	4689	2295	225,1
	7,5	1825	2338	2392	2504	2506	3407	3664	4204	589,6	57,8
2000	20	2546	3285	3377	3571	3622	5019	5459	6391	2996	293,8
	10	2507	3212	3285	3439	3435	4670	5021	5761	766,42	75,2
3000	20	3748	4827	4955	5226	5307	7314	7928	9230	2836	278,1
	10	3685	4710	4809	5015	5004	6752	7226	8215	723	70,9
5000	20	6362	8166	8363	8775	8891	12137	13081	15058	4707	461,6
	10	6252	7963	8109	8409	8363	11161	11860	13303	1192	116,9

EXAMPLE OF INSTALLATION WITH **EXTRA 3**

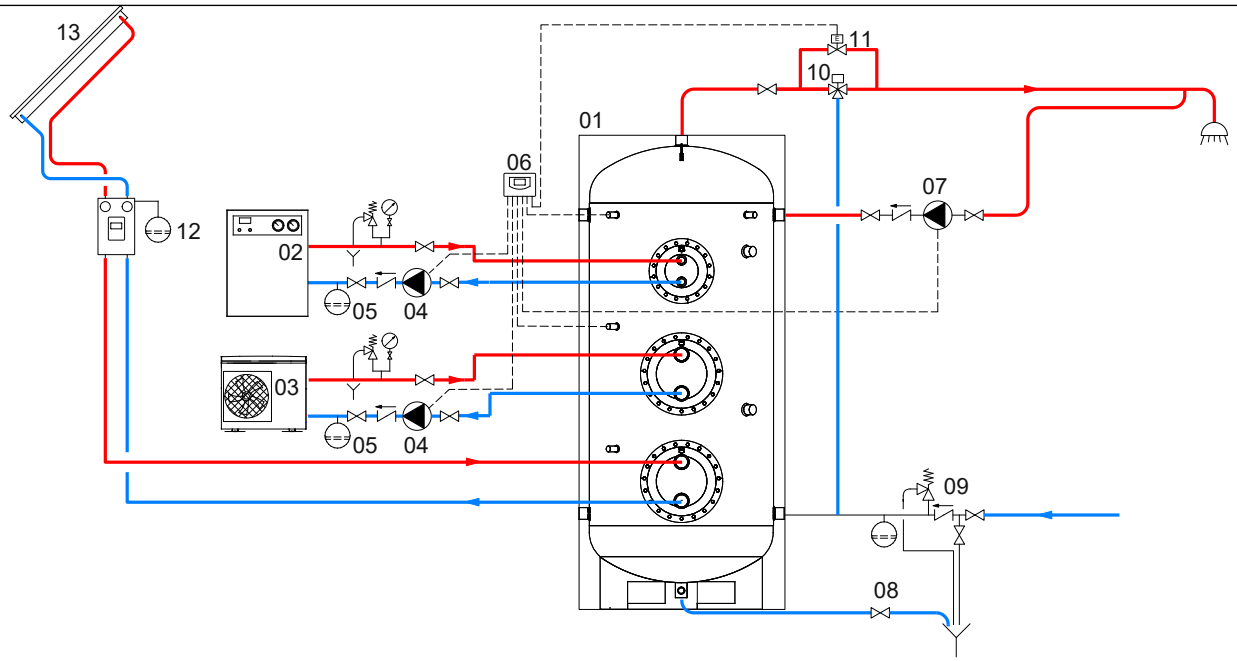

1	Extra 3	5	Expansion vessel	9	Hydraulic safety group	13	Solar panels
2	Generator	6	FULL CONTROL electronic unit / thermostat	10	Thermostatic mixing valve		
3	Generator (Heat pump)	7	D.H.W. recirculation group	11	By-pass solenoid valve		
4	Circulation group	8	Blowdown valve	12	Solar system circulation group		

The following schemes are purely illustrative. To realize the installation, always refer to a qualified technician.





	Lower heat exchangers surface [m²]
1500	3
2000	4
3000	6
5000	10

Flow rate [lt/min]

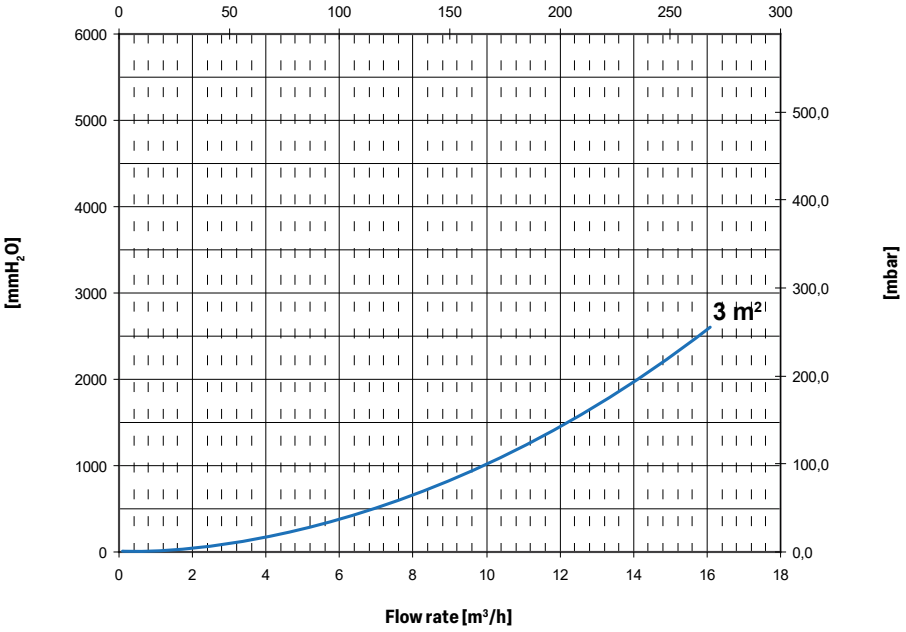

Flow rate [lt/min]

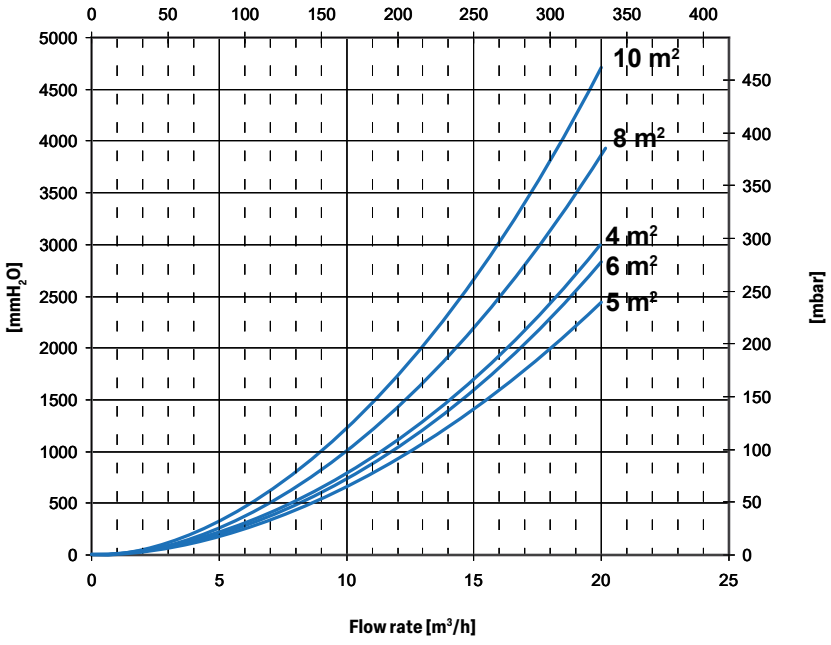



	Heat exchangers surface [m²]	
	Middle	Upper
1500	3	1,5
2000	4	2
3000	6	3
5000	10	5

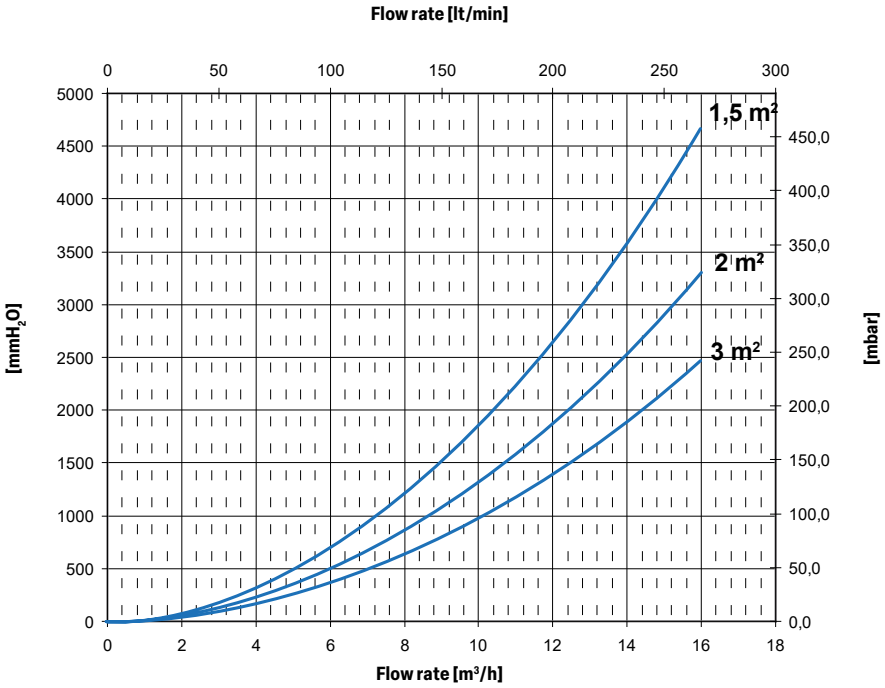

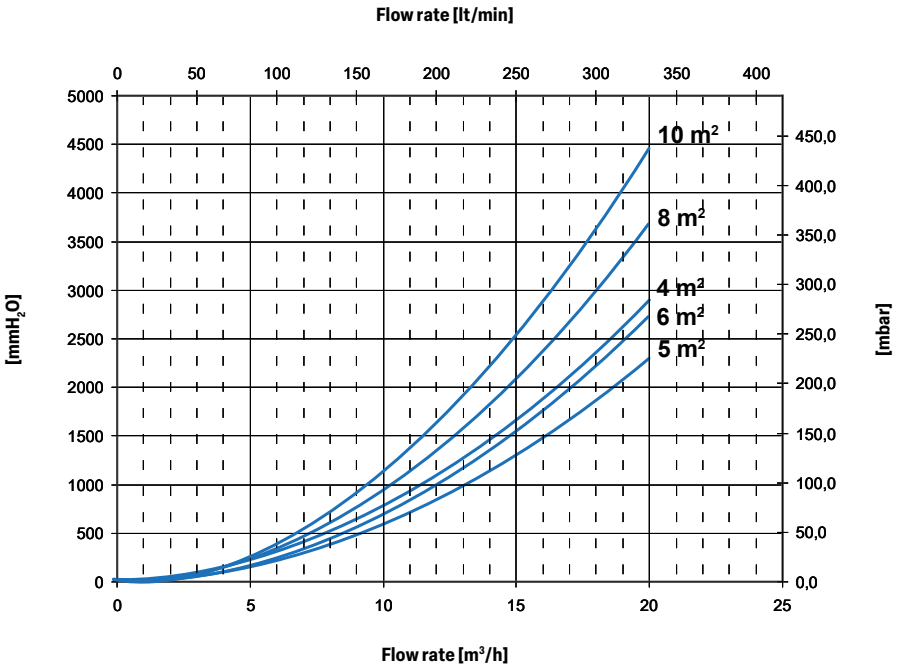

PERFORMANCE CHARTS AT PAGE 150-151

EXTRA **1-2-3 WXC-XXC /** EXTRA **1 COMPACT**

HEAT EXCHANGERS TECHNICAL DATA

Heat Exchanger output referred to temperature and flow rate of primary circuit and with secondary at 10/45°C at maximum withdrawal of producible DHW (Upper limit of the curves referred to maximum primary flow rate in the heat exchanger, while the lower limit in the curves refer to the minimum primary flow rate)



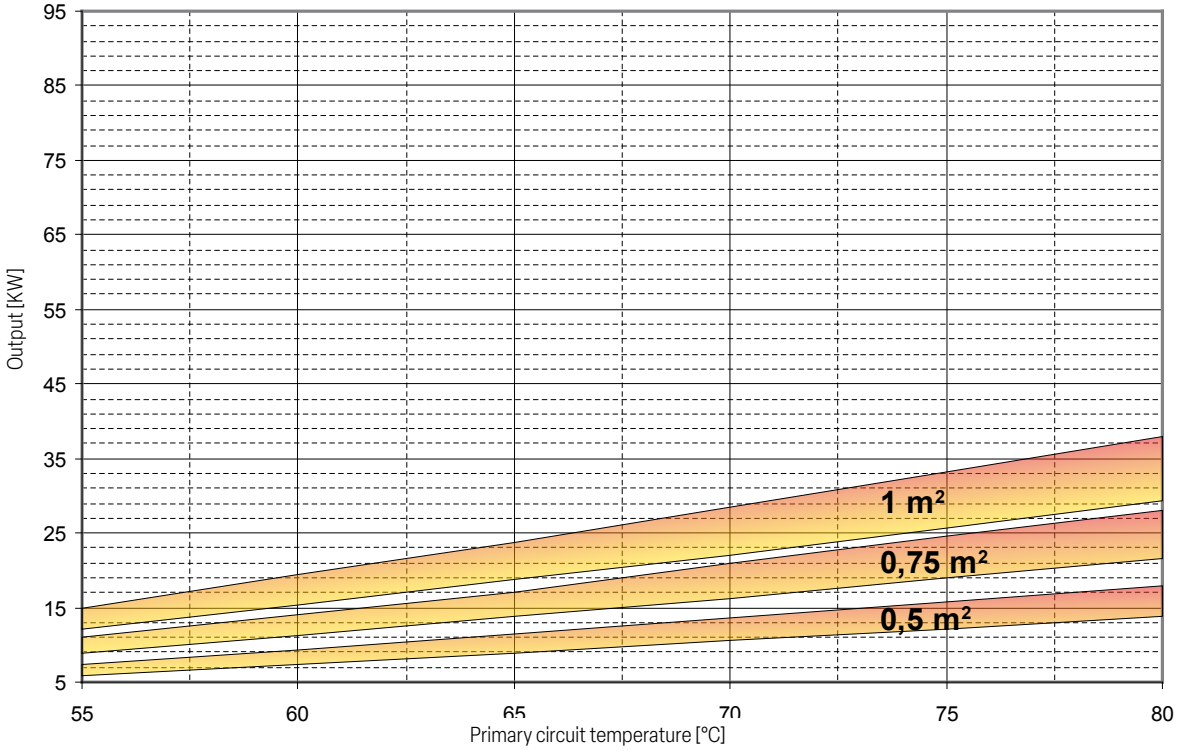

Heat exchanger surface	0,5 m²		0,75 m²		1 m²	
Flow rate [m³/h]	MAX	MIN	MAX	MIN	MAX	MIN
	2	1	3	1,5	4	2



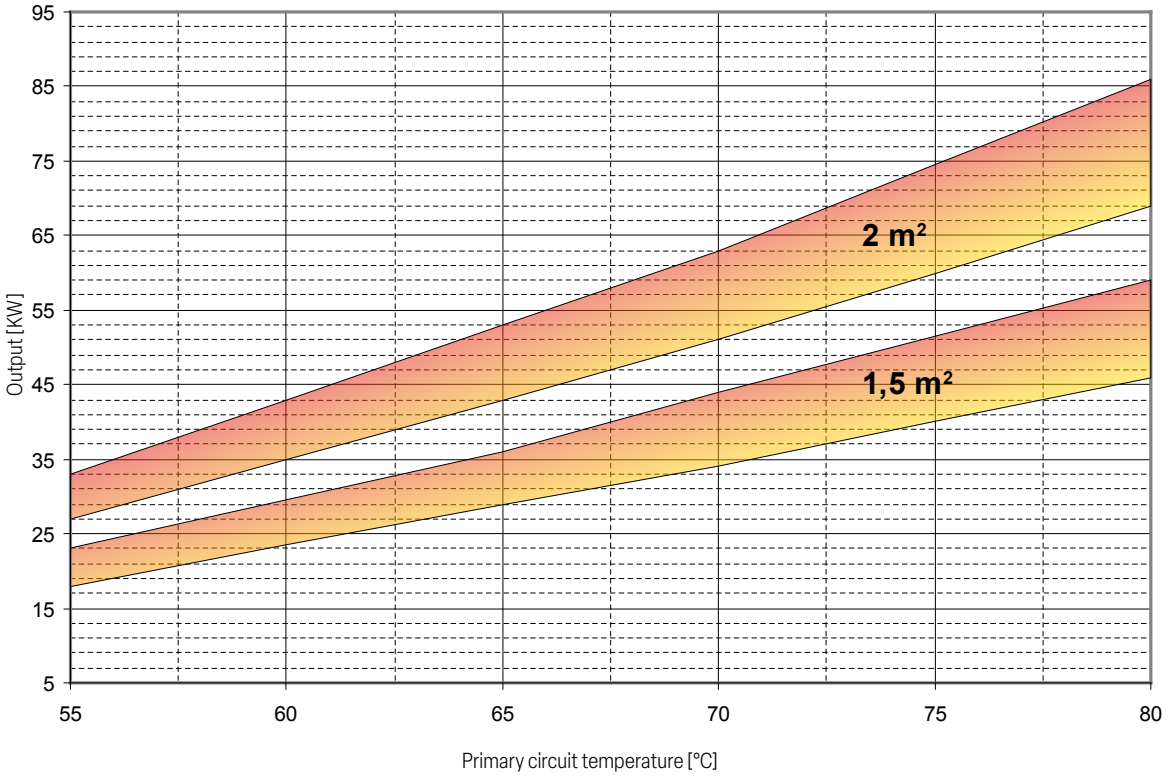

Heat exchanger surface	1,5 m²		2 m²	
Flow rate [m³/h]	MAX	MIN	MAX	MIN
	6	3	10	5

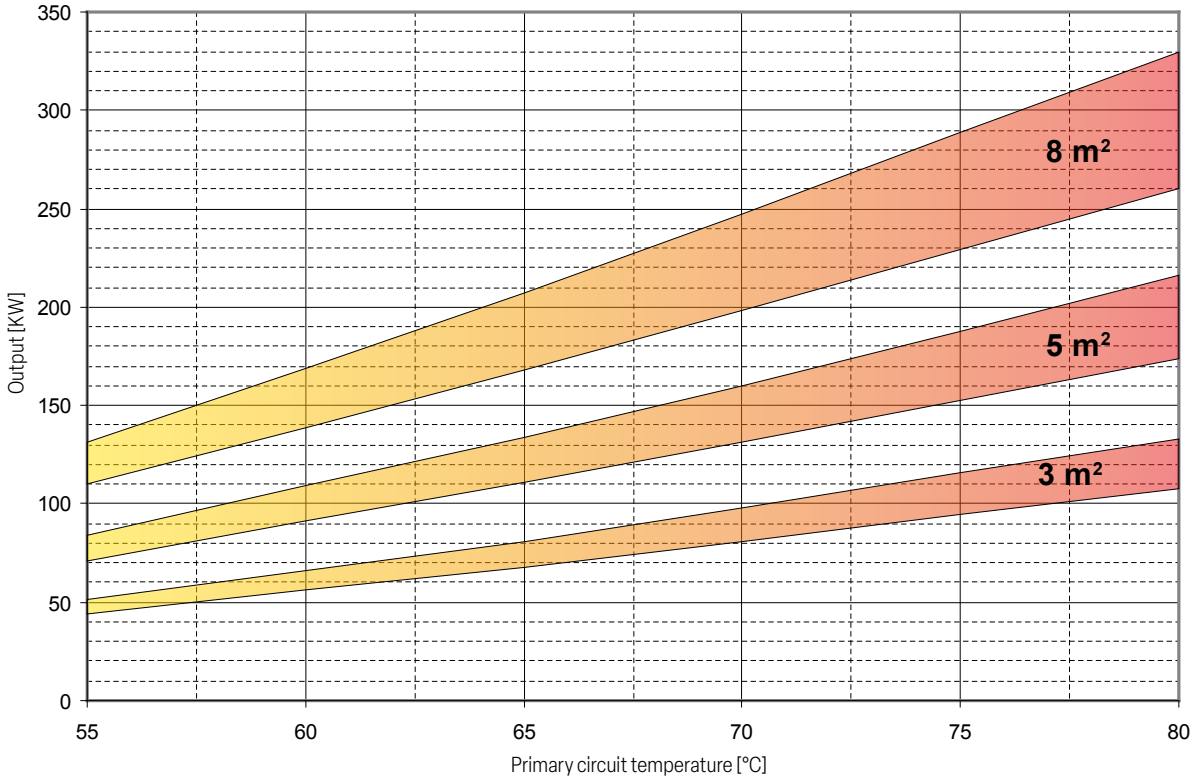

Heat exchanger surface	3 m²		5 m²		8 m²	
Flow rate [m³/h]	MAX	MIN	MAX	MIN	MAX	MIN
	15	7,5	20	10	20	10

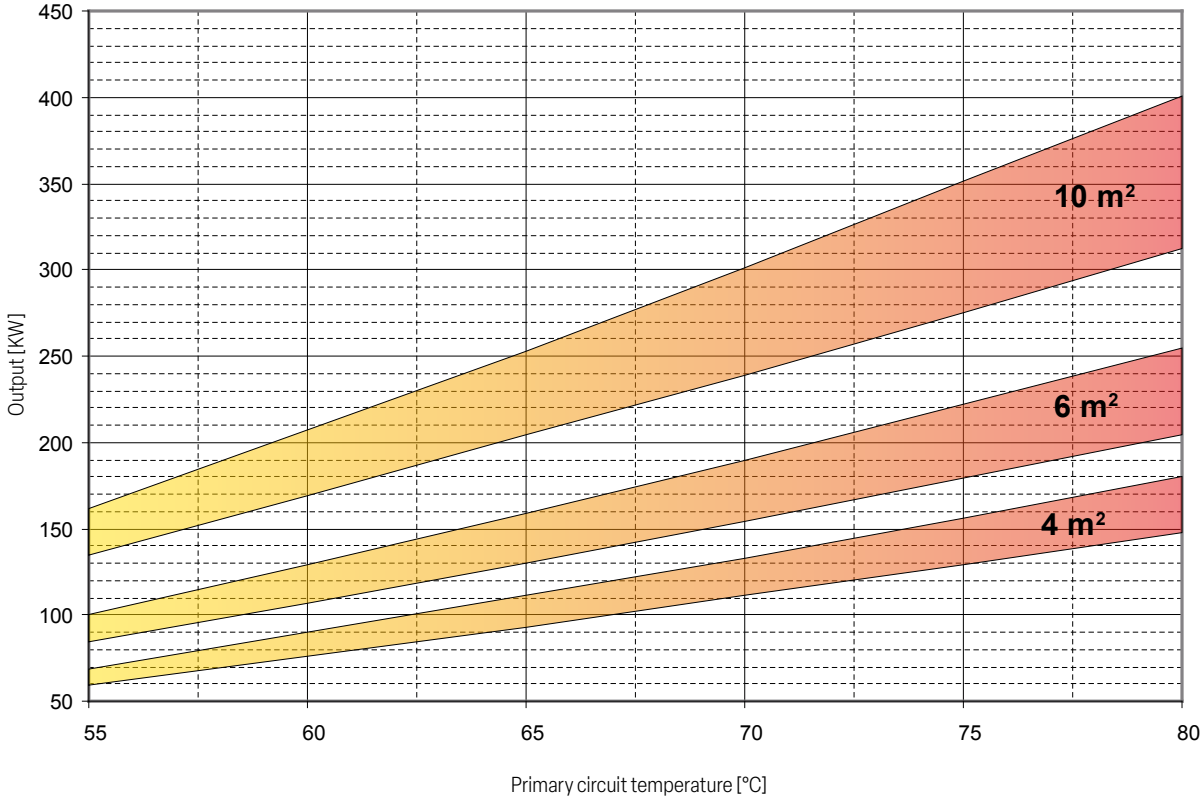

Heat exchanger surface	4 m²		6 m²		10 m²	
Flow rate [m³/h]	MAX	MIN	MAX	MIN	MAX	MIN
	20	10	20	10	20	10

EXTRA **1 HORIZONTAL**

POLYWARM® COATED CALORIFIERS WITH 1 EXTRACTABLE STAINLESS STEEL HEAT EXCHANGER



APPLICATION
Production and storage of domestic hot water (DHW).
MATERIAL
Mild steel Polywarm® coated (Attestation ACS - EN 16421)
HEAT EXCHANGER
Stainless steel 316L heat exchanger,
INSULATION (DISMOUNTABLE)
NOFIRE® polyester fleece 100% made of recyclable material, with high thermal insulation. Fire resistance class B-s2d0 according to EN 13501.
Grey PVC external lining.
CATHODE PROTECTION
Magnesium anode. Models > 1500 Nr. 2 magnesium anodes.

GASKET- FLANGE PLATE
Silicone gaskets suitable for water intended for human consumption (tested according to 98/83/CE), max temperature up to 200°C. Mild steel exchanger head with anticorrosion treatment.
WARRANTY
5 years (See general sales conditions and warranty)
ACCESSORIES AND SPARE PARTS
See Accessories section for the entire list.

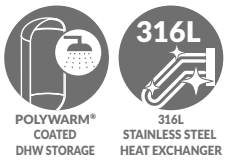

POLYWARM® COATED DHW STORAGE
316L STAINLESS STEEL HEAT EXCHANGER



EXTRA 1 WXC OR
DISMOUNTABLE SOFT FLEECE INSULATION

Model	Art. Nr.	Heat exchangers surface [m²]	ErP ENERGY EFFICIENCY CLASS
200	3072161430031	0,5	**C**
300	3072161430032	0,75	**C**
500	3072161430033	1	**C**
800	3072161430034	1,5	**C**
1000	3072161430035	2	**C**
1500	3072161430036	3	**C**
2000	3072161430037	4	**C**
3000	3072161430008	5	
4000	3072161430009	8	
5000	3072161430011	10	

Model	Ignition Time [min]	Output [Kw]	Continous production of DHW [lt/h]	DHW produced in the first 10 Min. [lt/10']	DHW produced in the first hour [lt/60']	Primary flow rate [m³/h]	Exchanger pressure drop [mmH₂O]	[mbar]
200	49	18	455	347	635	2	309	30,3
300	48	28	701	524	968	3	372	36,5
500	60	38	947	844	1443	4	419	41,1
800	59	59	1466	1301	2230	6	718	70,4
1000	54	86	2127	1776	3123	10	1380	135,3
1500	53	133	3290	2677	4761	15	2295	225,1
2000	52	180	4453	3564	6384	20	2996	293,8
3000	65	216	5361	5144	8539	20	2436	238,9
4000	57	330	8168	6918	12092	20	3896	382,1
5000	60	401	9921	8639	14923	20	4707	461,6

Data have been calculated on following basis: Primary circuit at 80 °C, and proper energy source; Production of DHW in continue way from 10 °C to 45 °C; DHW that can be taken in the first 10' and in the first hour from storage at 60°C, input 10°C and output 45°C; Sanitary water according to UNI CTI 8065.
Even if tanks are tested to resist till max temperature, the local legislation has always to be observed during the use.

ACCESSORIES

FULL CONTROL electronic unit (mounted on tank)

Art. Nr.	for models
5220280000004	WXC



Thermometer

Art. Nr.
5032240000107
5 units box



Titanium anode

Art. Nr.	Model
5200000000008	200, 300
5200000000009	500, 800
5200000000011	1000, 1500
5200000000013	2000



Products designed and manufactured for using within temperature and pressure limits in accordance to Art. 4.3 Directive 2014/68/EU (P.E.D.)

EXTRA **1 HORIZONTAL**

POLYWARM® COATED CALORIFIERS WITH 1 EXTRACTABLE STAINLESS STEEL HEAT EXCHANGER

STORAGE		HEAT EXCHANGER	
Pmax	Tmax	Pmax	Tmax
8 bar	90 °C	12 bar	110 °C

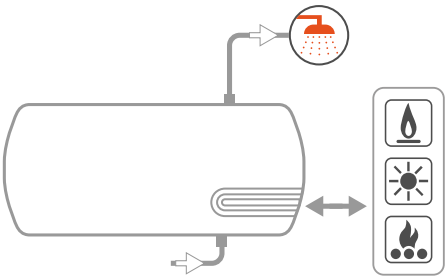

See TECHNICAL SUPPORT chapter for example of installation

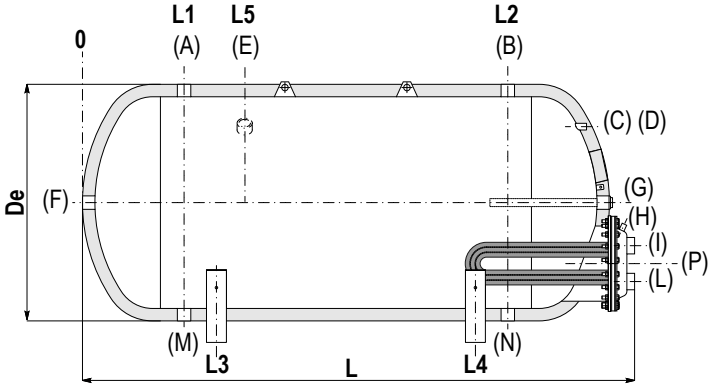

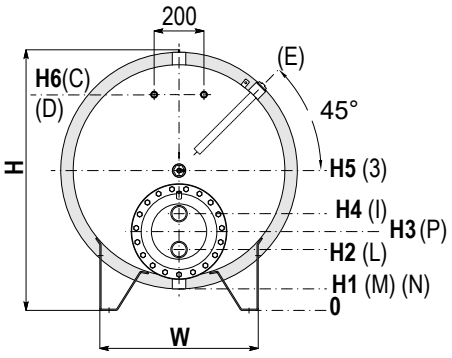

A	Domestic hot water outlet
B	Recirculation
C-D	Connection for instrumentation G 1/2" F
E	Connection for 2nd magnesium anode G 1"1/4 F (only for models > 1500)
F-G	Connection for magnesium anode/Recirculation
H	Heat exchanger drain G 3/8" F
I	Primary circuit inlet
L	Primary circuit outlet
M-N	Domestic water inlet / Drain
P	Flange

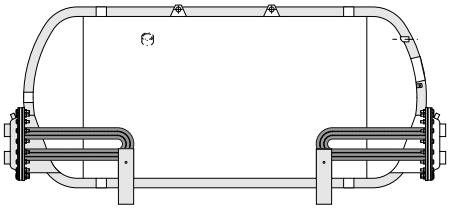

VERSION WITH 2 EXTRACTABLE HEAT EXCHANGERS IS AVAILABLE UPON REQUEST

Model	Volume	De	L	H	L1	L2	L3	L4	L5	H1
	[lt]	[mm]								
200	191	670	1594	693	344	1144	409	1079	//	43
300	292	770	1645	849	370	1170	440	1100	//	99
500	500	870	1934	946	395	1445	490	1350	//	96
800	795	970	2251	1042	425	1725	555	1595	//	92
1000	1045	1070	2281	1137	458	1758	588	1628	//	87
1500	1498	1210	2651	1240	474	2024	629	1869	//	90
2000	2064	1360	2706	1380	520	2070	660	1930	908	80
3000	2997	1350	2956	1524	495	2295	695	2095	945	154
4000	4184	1550	3066	1707	560	2360	665	2255	1010	137
5000	5131	1700	3107	1845	583	2383	783	2183	1033	125

Model	H2	H3	H4	H5	H6	W	P	L-I	F-G	B	A-M-N	E
	[mm]							Connections F				
200	243	293	343	368	498	364	Øi220/Øe300	1"	1"1/4	1"1/4	1"1/4	-
300	336	386	436	474	668	404	Øi220/Øe300	1"	1"1/4	1"1/4	1"1/4	-
500	383	433	483	521	715	455	Øi220/Øe300	1"	1"1/4	1"1/4	1"1/4	-
800	348	438	528	567	817	583	Øi300/Øe380	2"	1"1/4	1"1/4	1"1/2	-
1000	277	367	457	612	917	644	Øi300/Øe380	2"	1"1/2	1"1/2	1"1/2	-
1500	315	405	495	665	1020	759	Øi300/Øe380	2"	2"	2"	2"	-
2000	330	435	540	730	1085	848	Øi350/Øe430	2"	2"	2"	2"	1"1/4
3000	324	429	534	829	1184	981	Øi350/Øe430	2"	2"	2"	2"	1"1/4
4000	307	412	517	912	1267	1101	Øi350/Øe430	2"	2"	2"	3"	1"1/4
5000	305	410	515	975	1330	1189	Øi350/Øe430	2"	2"	2"	3"	1"1/4

Net volume data according to EN 15332 available on product label.

Products designed and manufactured for using within temperature and pressure limits in accordance to Art. 4.3 Directive 2014/68/EU (P.E.D.)

EXTRA **1 STEAM**

POLYWARM® COATED CALORIFIERS WITH 1 EXTRACTABLE STAINLESS STEEL HEAT EXCHANGER FOR STEAM GENERATOR



POLYWARM® COATED DHW STORAGE

316L STAINLESS STEEL HEAT EXCHANGER

APPLICATION
Production and storage of domestic hot water. Suitable for steam generators.
MATERIAL
Mild steel Polywarm® coated (Attestation ACS - EN 16421)
HEAT EXCHANGER
Stainless steel 316L straight heat exchanger suitable for steam power (P.E.D. directive compliant).
INSULATION
HARD: High thermal insulation with ecological polyurethane hard foam.
SOFT (DISMOUNTABLE): NOFIRE® polyester fleece 100% made of recyclable material, with high thermal insulation. Fire resistance class B-s2d0 according to EN 13501.
Grey PVC external lining.

CATHODE PROTECTION
Magnesium anode. Models > 1500 Nr. 2 magnesium anodes.
DRAIN
External confluence through drain connection. Models > 1000 external confluence through drain pipe.
GASKET- FLANGE PLATE
Asbestos-free fiber gaskets.
Mild steel exchanger head with anticorrosion treatment.
WARRANTY
5 years (See general sales conditions and warranty)
ACCESSORIES AND SPARE PARTS
See Accessories section for the entire list.

	Model	Art. Nr.	Heat exchangers surface [m²]	ErP ENERGY EFFICIENCY CLASS
  **EXTRA 1 VAPORE WXB** HARD FOAM INSULATION	**500**	3069162360123	1	**C**
	800	3069162360124	1,5	**B**
	1000	3069162360125	2	**C**
	1500	3069162360126	3	**C**
	2000	3069162360127	3	**B**
  **EXTRA 1 VAPORE WXC** DISMOUNTABLE SOFT FLEECE INSULATION	**500**	3069162360133	1	**C**
	800	3069162360134	1,5	**C**
	1000	3069162360135	2	**C**
	1500	3069162360136	3	**C**
	2000	3069162360137	3	**C**
	2500	3069162360111	3	
	3000	3069162360108	3	
	4000	3069162360109	4	
	5000	3069162360110	5	

HEAT EXCHANGERS FOR STEAM GENERATOR TECHNICAL DATA

Model	PED	Heat exchangers performance calculated with primary circuit at **6 bar** saturated steam and production of DHW from 10° to 45°C				Heat exchangers performance calculated with primary circuit at **3 bar** saturated steam and production of DHW from 10° to 45°C			
		Output	DHW production		Ignition time	Output	DHW production		Ignition time
		[KW]	[l/h]	[l/10']	[min]	[KW]	[l/h]	[l/10']	[min]
500	Art. 4.3	141	3464	1189	9	114	2793	1077	11
800	Cat. I	212	5196	1869	9	171	4189	1701	12
1000	Cat. I	282	6928	2463	9	227	5585	2239	11
1500	Cat. I	423	10393	3554	9	341	8378	3218	11
2000	Cat. I	423	10393	4228	12	341	8378	3892	15
2500	Cat. I	423	10393	4571	13	341	8378	4235	17
3000	Cat. I	423	10393	5438	17	341	8378	5102	22
4000	Cat. I	564	13857	7031	17	455	11171	6583	21
5000	Cat. I	705	17321	9097	17	568	13963	8537	22

ACCESSORIES

FULL CONTROL electronic unit (mounted on tank)

Art. Nr.	for models
5220280000004	WXC
5220280000005	WXB



Thermometer

Art. Nr.
5032240000107
5 units box



Titanium anode

Art. Nr.	Model
5200000000009	500, 800
5200000000011	1000, 1500
5200000000013	2000÷5000



Products designed and manufactured for using within temperature and pressure limits in accordance to Art. 4.3 Directive 2014/68/EU (P.E.D.)

EXTRA **1 STEAM**

POLYWARM® COATED CALORIFIERS WITH 1 EXTRACTABLE STAINLESS STEEL HEAT EXCHANGER FOR STEAM GENERATOR

	STORAGE		HEAT EXCHANGER	
Model	Pmax	Tmax	Pmax	Tmax
500 ÷ 1000	8 bar	90 °C	6 bar	165 °C
1500 ÷ 5000	6 bar			

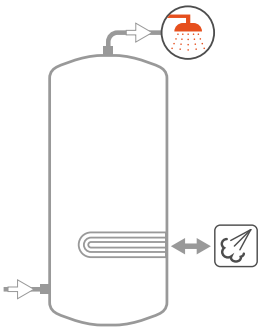

See TECHNICAL SUPPORT chapter for example of installation

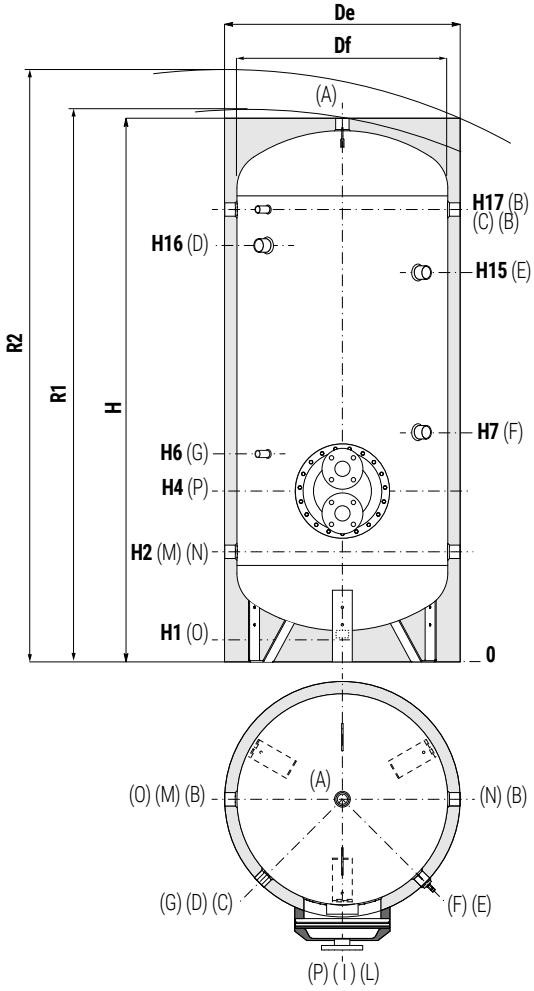

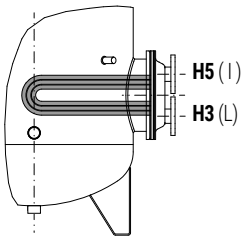

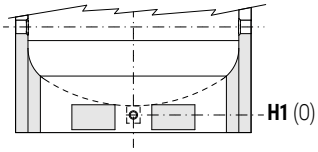

Models from 1500 to 5000 are equipped with a practical skirt support which facilitate the handling with transpallets and forklifts. Also, discharge piping already mounted to allow total emptying.

A	Domestic hot water outlet
B	Recirculation / Domestic hot water outlet
C	Connection for instrumentation G 1/2" F
D	Connection for electric immersion heater G 1" 1/2 F for models > 800 connection 2" F
E	Connection for 2nd magnesium anode 1"1/4 F (only for models > 1000)
F	Connection for magnesium anode G 1" 1/4 F
G	Connection for instrumentation 1/2" F
I	Steam circuit inlet
L	Outlet for condense
M	Domestic cold water circuit inlet
N	Alternative domestic cold water circuit inlet or connection for more tanks in series
O	Drain
P	Heat exchanger flange

EXTRA 1 VAPORE WXB - HARD FOAM INSULATION

Model	Volume	Weight	De	H	R2	H1	H2	H3	H4	H5	H6	H7	H15	H16	H17	P	B-N M	I-L	A	O
	[lt]	[kg]	[mm]														Connections F			
500	500	99	750	1800	1960	85	375	410	460	510	570	760	//	1329	1485	Øi220/Øe300	1"1/4	DN25 PN16	1"1/4	1"1/4
800	794	161	900	2135	2330	85	405	450	540	630	690	870	//	1610	1765	Øi300/Øe380	1"1/4	DN50 PN16	1"1/4	1"1/4
1000	1042	204	1000	2221	2450	105	458	503	593	683	743	993	//	1664	1818	Øi300/Øe380	1"1/4	DN50 PN16	1"1/2	1"1/2
1500	1445	250	1100	2415	2660	109	440	485	575	665	725	1075	//	1895	2050	Øi300/Øe380	1"1/2	DN50 PN16	1"1/2	1"
2000	1977	288	1300	2492	2820	91	467	602	692	782	867	842	1952	1877	2057	Øi300/Øe380	2"	DN50 PN16	2"	1"

Net volume data according to EN 15332 available on product label.

EXTRA 1 VAPORE WXC - DISMOUNTABLE SOFT FLEECE INSULATION

Model	Volume	Weight	De	Df	H	R1	R2	H1	H2	H3	H4	H5	H6	H7	H15	H16	H17	P	B-N M	I-L	A	O
	[lt]	[kg]	[mm]																Connections F			
500	500	90	870	650	1891	1870	2090	126	416	451	501	551	611	801	//	1370	1526	Øi220/Øe300	1"1/4	DN25 PN16	1"1/4	1"1/4
800	794	161	970	750	2188	2220	2400	113	433	478	568	658	718	898	//	1638	1793	Øi300/Øe380	1"1/4	DN50 PN16	1"1/4	1"1/4
1000	1042	204	1070	850	2242	2270	2490	101	454	499	589	679	739	989	//	1660	1814	Øi300/Øe380	1"1/4	DN50 PN16	1"1/4	1"1/2
1500	1445	250	1210	950	2440	2495	2730	109	440	485	575	665	725	1075	//	1895	2050	Øi300/Øe380	1"1/4	DN50 PN16	1"1/2	1"
2000	1977	288	1360	1100	2492	2570	2850	91	467	602	692	782	867	842	1952	1877	2057	Øi300/Øe380	1"1/2	DN50 PN16	1"1/2	1"
2500	2312	331	1350	1250	2311	2480	2690	140	551	686	776	866	951	976	1816	1732	1891	Øi300/Øe380	2"	DN50 PN16	2"	1"
3000	2918	377	1350	1250	2811	2950	3130	140	551	686	776	866	951	1036	2316	2232	2391	Øi300/Øe380	2"	DN50 PN16	2"	1"
4000	3769	530	1500	1400	2875	3050	3250	114	570	690	795	900	970	1035	2315	2238	2410	Øi350/Øe430	2"	DN50 PN16	2"	1"
5000	4982	663	1700	1600	2915	3130	3380	94	580	700	805	910	980	1035	2335	2265	2420	Øi350/Øe430	2"	DN50 PN16	2"	1"

Net volume data according to EN 15332 available on product label.

Products designed and manufactured for using within temperature and pressure limits in accordance to Art. 4.3 Directive 2014/68/EU (P.E.D.)

EXTRA **2 STEAM**

POLYWARM® COATED CALORIFIERS WITH 2 EXTRACTABLE STAINLESS STEEL HEAT EXCHANGERS FOR STEAM GENERATOR



POLYWARM® COATED DHW STORAGE

316L STAINLESS STEEL HEAT EXCHANGER

APPLICATION
Production and storage of domestic hot water. Suitable for steam generators.
MATERIAL
Mild steel Polywarm® coated (Attestation ACS - EN 16421)
HEAT EXCHANGER
Nr. 2 Stainless steel 316L straight heat exchanger suitable for steam power (P.E.D. directive compliant).
INSULATION (DISMOUNTABLE)
NOFIRE® polyester fleece 100% made of recyclable material, with high thermal insulation. Fire resistance class B-s2d0 according to EN 13501.
Grey PVC external lining.

CATHODE PROTECTION
Nr. 2 magnesium anodes.
DRAIN
External confluence through drain connection.
GASKET- FLANGE PLATE
Asbestos-free fiber gaskets.
Mild steel exchanger head with anticorrosion treatment.
WARRANTY
5 years (See general sales conditions and warranty)
ACCESSORIES AND SPARE PARTS
See Accessories section for the entire list.





EXTRA 2 VAPORE WXC
DISMOUNTABLE SOFT FLEECE INSULATION

Model	Art. Nr.	Heat exchangers surface Lower [m²]	Heat exchangers surface Upper [m²]
3000	3069162363008	3	3
4000	3069162363009	4	4
5000	3069162363010	5	5

HEAT EXCHANGERS FOR STEAM GENERATOR TECHNICAL DATA

HEAT EXCHANGER	Model	PED	Heat exchangers performance calculated with primary circuit at **6 bar** saturated steam and production of DHW from 10° to 45°C				Heat exchangers performance calculated with primary circuit at **3 bar** saturated steam and production of DHW from 10° to 45°C			
			Output	DHW production		Ignition time	Output	DHW production		Ignition time
			[KW]	[l/h]	[l/10']	[min]	[KW]	[l/h]	[l/10']	[min]
Middle	**3000**	Cat. I	423	10393	4098	11	341	8378	3762	14
	4000	Cat. I	564	13857	5349	11	455	11171	4902	13
	5000	Cat. I	705	17321	6907	11	568	13963	6347	14
Lower	**3000**	Cat. I	423	10393	5438	17	341	8378	5102	22
	4000	Cat. I	564	13857	7031	17	455	11171	6583	21
	5000	Cat. I	705	17321	9097	17	568	13963	8537	22

ACCESSORIES

FULL CONTROL electronic unit (mounted on tank)

Art. Nr.	for models
5220280000004	WXC



Thermometer

Art. Nr.
5032240000107
5 units box



Titanium anode

Art. Nr.	Model
5200000000013	3000÷5000



Products designed and manufactured for using within temperature and pressure limits in accordance to Art. 4.3 Directive 2014/68/EU (P.E.D.)

EXTRA **2 STEAM**

POLYWARM® COATED CALORIFIERS WITH 2 EXTRACTABLE STAINLESS STEEL HEAT EXCHANGERS FOR STEAM GENERATOR

STORAGE		HEAT EXCHANGER	
Pmax	Tmax	Pmax	Tmax
6 bar	90 °C	6 bar	165 °C

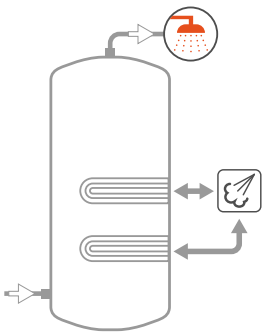

See TECHNICAL SUPPORT chapter for example of installation

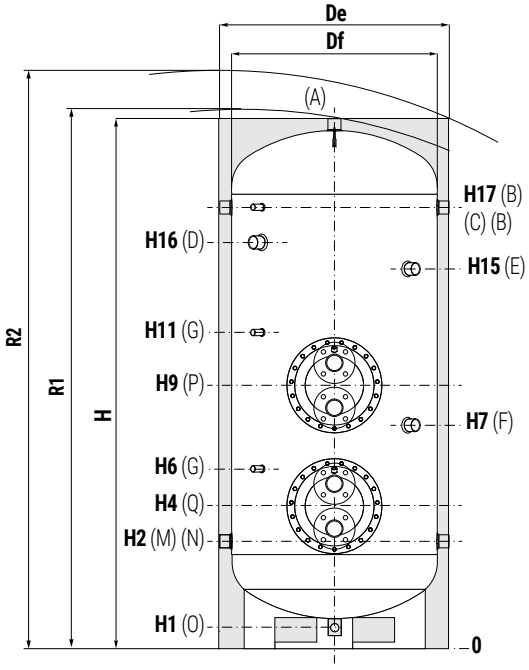

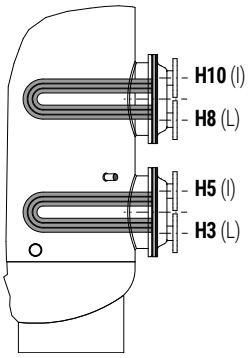

Models are equipped with a practical skirt support which facilitate the handling with transpallets and forklifts. Also, discharge piping already mounted to allow total emptying.

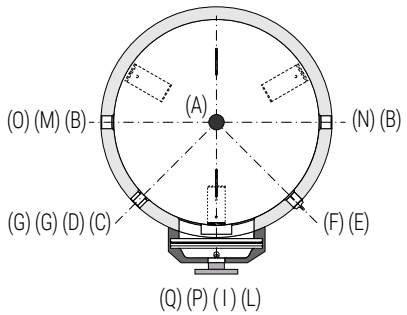

A	Domestic hot water outlet G 2" F
B	Recirculation / Domestic hot water outlet G 2" F
C	Connection for instrumentation G 1/2" F
D	Connection for electric immersion heater G 2" F
E	Connection for 2nd magnesium anode G 1"1/4 F
F	Connection for magnesium anode G 1"1/4 F
G	Connection for instrumentation G 1/2" F
I	Steam circuit inlet DN50 PN16
L	Outlet for condense DN50 PN16
M	Domestic cold water circuit inlet G 2" F
N	Alternative domestic cold water circuit inlet or connection for more tanks in series G 2" F
O	Drain G 1" F
P	Upper heat exchanger flange
Q	Lower heat exchanger flange

Model	Volume	Weight	De	Df	H	R1	R2	H1	H2	H3	H4	H5	H6	H7
	[lt]	[Kg]	[mm]											
3000	2923	440	1350	1250	2811	2950	3130	140	551	686	776	866	951	1036
4000	3776	620	1500	1400	2875	3050	3250	114	570	690	795	900	970	1035
5000	4990	763	1700	1600	2915	3130	3380	94	580	700	805	910	980	1035

Model	H8	H9	H10	H11	H15	H16	H17	P-Q
	[mm]							
3000	1386	1476	1566	1651	2316	2232	2391	Øi300/Øe380
4000	1390	1495	1600	1670	2315	2238	2410	Øi350/Øe430
5000	1400	1505	1610	1680	2335	2265	2420	Øi350/Øe430

Net volume data according to EN 15332 available on product label.

Products designed and manufactured for using within temperature and pressure limits in accordance to Art. 4.3 Directive 2014/68/EU (P.E.D.)

EXTRA **1 PLUS**

POLYWARM® COATED CALORIFIERS WITH 1 EXTRACTABLE FINNED COPPER HEAT EXCHANGER



APPLICATION
Production and storage of domestic hot water (DHW).
MATERIAL
Mild steel Polywarm® coated (Attestation ACS - EN 16421)
HEAT EXCHANGER
Nr. 1 copper finned and tinned heat exchanger.
INSULATION
HARD: High thermal insulation with ecological polyurethane hard foam.
SOFT (DISMOUNTABLE): NOFIRE® polyester fleece 100% made of recyclable material, with high thermal insulation. Fire resistance class B-s2d0 according to EN 13501.
Grey PVC external lining.

CATHODE PROTECTION
Magnesium anode. Models > 1500 Nr. 2 magnesium anodes.
DRAIN
External confluence through drain connection. Models > 1000 external confluence through drain pipe.
GASKET- FLANGE PLATE
Silicone gaskets suitable for water intended for human consumption (tested according to 98/83/CE), max temperature up to 200°C. Mild steel inspection flange plate Polywarm® coated.
WARRANTY
5 years (See general sales conditions and warranty)
ACCESSORIES AND SPARE PARTS
See Accessories section for the entire list.

POLYWARM® COATED DHW STORAGE

		Model	Art. Nr.	Heat exchangers surface [m²]	ErP ENERGY EFFICIENCY CLASS
	 **EXTRA 1 PLUS WRB** HARD FOAM INSULATION	**200**	3074162352302	0,76	**B**
		300	3074162352303	0,94	**C**
		500	3074162352304	1,58	**C**
		800	3074162352310	2,63	**B**
		1000	3074162352311	3,17	**C**
		1500	3074162352312	4,54	**C**
		2000	3074162352313	5,26	**B**
	 **EXTRA 1 PLUS WRC** DISMOUNTABLE SOFT FLEECE INSULATION	**500**	3072162352334	1,58	**C**
		800	3072162352340	2,63	**C**
		1000	3072162352341	3,17	**C**
		1500	3072162352342	4,54	**C**
		2000	3072162352343	5,26	**C**
		2500	3072162352344	6,34	
		3000	3072162352345	6,34	
		4000	3072162352346	6,34	
		5000	3072162352347	6,34	

ACCESSORIES

ELECTRIC IMMERSION HEATERS

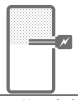

Mod.	Heated volume by electric immersion heater [lt]	MONOPHASE 1,5 kW	MONOPHASE 2 kW	MONOPHASE 3 kW	THREEPHASE 4 kW	THREEPHASE 5 kW	THREEPHASE 6 kW	THREEPHASE 9 kW	THREEPHASE 12 kW
		5240000000051	5240000000052	5240000000053	5240000000047	5240000000048	5240000000049	5240000000050	5240000000031
		Ignition time from 10 °C to 45 °C with electric immersion heaters [min]			Ignition time from 10 °C to 45 °C with electric immersion heaters [min]				
200	49	87	65	44	33	//	//	//	//
300	76	136	102	68	51	//	//	//	//
500	127	228	171	114	85	68	57	//	//
800	178	318	239	159	120	96	80	//	//
1000	243	436	327	218	163	131	109	73	54
1500	288	516	387	258	194	155	129	86	65
2000	443	793	595	396	297	238	198	132	99
2500	577	1033	775	517	387	310	258	172	129
3000	577	1033	775	517	387	310	258	172	129
4000	797	1428	1071	714	535	428	357	238	178
5000	1040	1864	1398	932	699	559	466	311	233

FULL CONTROL electronic unit (mounted on tank)

Art. Nr.	for models
5220280000004	WRC
5220280000005	WRB



Thermometer

Art. Nr.
5032240000107
5 units box



Titanium anode

Art. Nr.	Model
5200000000008	200, 300
5200000000009	500, 800
5200000000011	1000, 1500
5200000000013	2000



Products designed and manufactured for using within temperature and pressure limits in accordance to Art. 4.3 Directive 2014/68/EU (P.E.D.)

EXTRA **1 PLUS**

POLYWARM® COATED CALORIFIERS WITH 1 EXTRACTABLE FINNED COPPER HEAT EXCHANGER

	STORAGE		HEAT EXCHANGER	
Model	Pmax	Tmax	Pmax	Tmax
200 ÷ 1000	8 bar	90 °C	12 bar	110 °C
1500 ÷ 5000	6 bar			

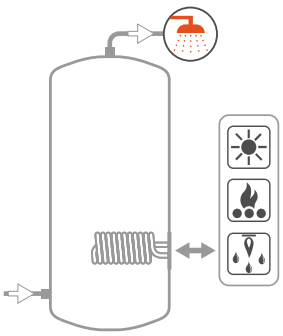

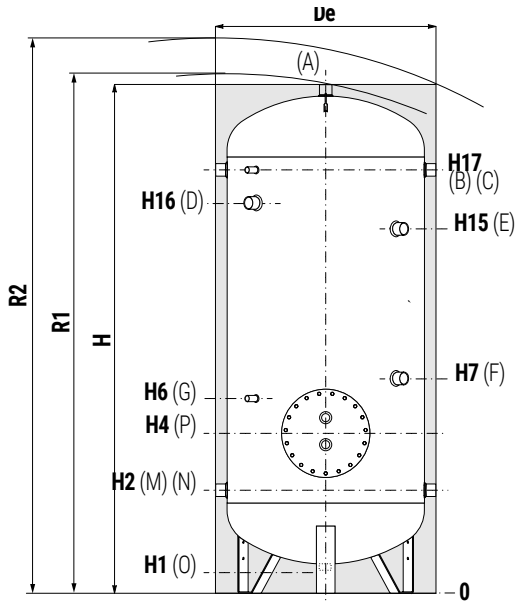

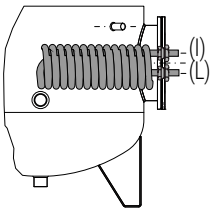

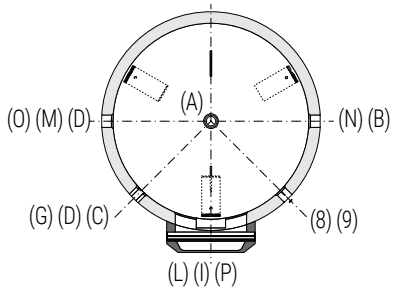

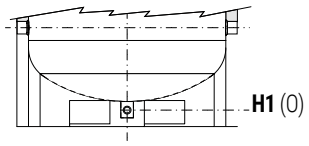

Models from 1500 to 5000 are equipped with a practical skirt support which facilitate the handling with transpallets and forklifts. Also, discharge piping already mounted to allow total emptying.

A	Domestic hot water outlet
B	Recirculation / Domestic hot water outlet
C	Connection for instrumentation G 1/2" F
D	Connection for electric immersion heater G 1" 1/2 F for models > 800 connection G 2" F
E	Connection for 2nd magnesium anode G 1"1/4 F (only for models > 1500)
F	Connection for magnesium anode G 1" 1/4 F
G	Connection for instrumentation G 1/2" F
I	Primary circuit inlet
L	Primary circuit outlet
M	Domestic cold water circuit inlet
N	Alternative domestic cold water circuit inlet or connection for more tanks in series
O	Drain
P	Heat exchanger flange

EXTRA 1 PLUS WRB - HARD FOAM INSULATION

Model	Volume	De	H	R2	H1	H2	H4	H6	H7	H15	H16	H17	P	B-M-N	A	O	I-L
	[lt]	[mm]												Connections F			
200	191	550	1449	1560	85	325	410	520	650	//	1075	1185	Øi220/Øe300	1"1/4	1"1/4	1"1/4	1"
300	292	650	1499	1640	85	350	435	545	735	//	1100	1210	Øi220/Øe300	1"1/4	1"1/4	1"1/4	1"
500	500	750	1800	1960	85	375	460	570	760	//	1329	1485	Øi220/Øe300	1"1/4	1"1/4	1"1/4	1"
800	791	900	2135	2330	85	405	490	600	870	//	1610	1765	Øi300/Øe380	1"1/4	1"1/4	1"1/4	1"
1000	1040	1000	2221	2450	105	458	543	653	993	//	1664	1818	Øi300/Øe380	1"1/2	1"1/2	1"1/2	1"
1500	1442	1100	2415	2660	109	440	525	635	1075	//	1895	2050	Øi300/Øe380	1"1/2	2"	1"	1"1/4
2000	1974	1300	2492	2820	91	467	542	652	842	1952	1877	2057	Øi350/Øe430	2"	2"	1"	1"1/4

Net volume data according to EN 15332 available on product label.

EXTRA 1 PLUS WRC - DISMOUNTABLE SOFT FLEECE INSULATION

Model	Volume	De	Df	H	R1	R2	H1	H2	H4	H6	H7	H15	H16	H17	P	B-M-N	A	O	I-L
	[lt]	[mm]														Connections F			
500	500	870	650	1841	1998	2090	101	416	501	611	801	//	1370	1526	Øi220/Øe300	1"1/4	1"1/4	1"1/4	1"
800	791	970	750	2188	2220	2400	113	433	518	628	898	//	1638	1793	Øi300/Øe380	1"1/4	1"1/4	1"1/4	1"
1000	1040	1070	850	2242	2270	2490	101	454	539	649	989	//	1660	1814	Øi300/Øe380	1"1/2	1"1/2	1"1/2	1"
1500	1442	1210	950	2440	2495	2730	109	440	525	635	1075	//	1895	2050	Øi300/Øe380	1"1/2	2"	1"	1"1/4
2000	1974	1360	1100	2492	2570	2850	91	467	542	652	842	1952	1877	2057	Øi350/Øe430	2"	2"	1"	1"1/4
2500	2310	1350	1250	2311	2480	2690	140	551	626	736	976	1816	1732	1891	Øi350/Øe430	2"	2"	1"	1"1/4
3000	2916	1350	1250	2811	2950	3130	140	551	626	736	876	2316	2232	2391	Øi350/Øe430	2"	2"	1"	1"1/4
4000	3764	1500	1400	2875	3050	3250	114	570	645	755	895	2315	2238	2410	Øi350/Øe430	2"	2"	1"	1"1/4
5000	4978	1700	1600	2915	3130	3380	94	580	655	765	935	2335	2265	2420	Øi350/Øe430	2"	2"	1"	1"1/4

Net volume data according to EN 15332 available on product label.

Products designed and manufactured for using within temperature and pressure limits in accordance to Art. 4.3 Directive 2014/68/EU (P.E.D.)

EXTRA **1 PLUS**

HEAT EXCHANGERS TECHNICAL DATA



Data have been calculated on following basis:
1) Primary circuit at T1 and proper energy source;
2) Production of DHW in continuous from 10 °C to t2;
3) DHW that can be taken in the first 10' and in the first hour from storage at t2, input 10 °C and output 45 °C;
4) Non-scaling sanitary water

LOWER
HEAT EXCHANGER

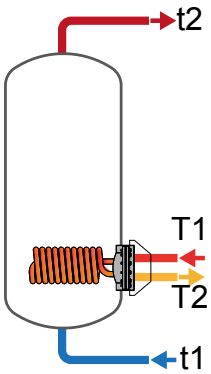

Model	Primary flow rate	Ignition time (minutes) from 10 °C to t2 and primary at T1				Maximum power exchange (kW) with primary at T1, secondary within 10-45 °C and constant use of DHW production				DHW continuous production lt/h within 10-45 °C and primary at T1HW production			
	[m³/h]	T1/t2				T1				T1			
		55/50	65/60	70/60	80/60	55	65	70	80	55	65	70	80
200	1,4	95	97	65	40	7	11	14	19	172	270	342	467
	0,7	106	107	72	45	6	10	12	17	147	246	295	418
300	1,4	119	118	79	49	9	14	17	24	214	353	428	586
	0,7	130	131	87	54	8	13	16	21	203	329	396	535
500	1,4	132	132	89	55	14	23	28	37	347	565	680	923
	0,7	150	151	103	65	13	21	25	33	321	509	606	809
800	1,4	137	138	94	59	23	36	44	56	562	900	1076	1443
	0,7	164	167	115	73	21	32	38	49	510	789	931	1222
1000	1,4	154	155	105	67	27	43	51	68	668	1062	1265	1688
	0,7	187	191	132	85	24	37	44	57	602	921	1082	1409
1500	3	139	140	95	59	40	65	77	104	988	1594	1910	2577
	1,5	162	164	113	72	37	57	68	90	906	1417	1678	2218
2000	3	168	169	115	72	46	74	88	118	1133	1820	2177	2925
	1,5	199	202	139	89	42	65	77	101	1033	1605	1895	2493
2500	3	163	164	112	71	55	87	104	139	1349	2150	2564	3428
	1,5	197	200	139	102	50	76	89	117	1221	1876	2206	2881
3000	3	214	216	147	93	55	87	104	139	1349	2150	2564	3428
	1,5	258	263	181	117	50	76	89	117	1221	1876	2206	2881
4000	3	274	276	187	118	55	87	104	139	1349	2150	2564	3428
	1,5	330	337	232	149	50	76	89	117	1221	1876	2206	2881
5000	3	361	364	247	156	55	87	104	139	1349	2150	2564	3428
	1,5	436	445	305	196	50	76	89	117	1221	1876	2206	2881

Model	Primary flow rate	DHW produced in the first 10 minutes in lt/10' input 10 °C output 45 °C, storage at t2 and primary at T1				DHW produced in the first hour in lt/60' input 10 °C output 45 °C, storage at t2 and primary at T1				Heat exchanger pressure drop	
	[m³/h]	T1/t2				T1/t2				[mmH$_2$O]	[mbar]
		55/50	65/60	70/60	80/60	55/50	65/60	70/60	80/60		
200	1,4	212	274	285	306	320	445	502	602	895	88
	0,7	207	270	278	298	301	425	464	563	223	22
300	1,4	313	406	418	445	449	630	690	816	1936	190
	0,7	312	402	413	436	440	610	664	775	484	47
500	1,4	547	706	725	765	767	1063	1155	1350	1861	183
	0,7	543	696	712	746	746	1019	1096	1259	465	46
800	1,4	896	1153	1182	1243	1252	1723	1864	2157	3097	304
	0,7	887	1134	1158	1207	1210	1634	1748	1980	774	76
1000	1,4	1158	1486	1519	1590	1581	2158	2321	2659	3733	366
	0,7	1147	1462	1489	1543	1528	2045	2174	2436	933	91
1500	3	1622	2087	2140	2251	2248	3097	3349	3883	2878	282
	1,5	1608	2058	2101	2191	2182	2955	3164	3596	720	71
2000	3	2185	2799	2859	2983	2903	3952	4237	4836	2878	282
	1,5	2169	2763	2812	2911	2823	3780	4012	4490	720	71
2500	3	2496	3197	3266	3410	3350	4559	4890	5581	4588	450
	1,5	2474	3151	3206	3319	3248	4339	4603	5143	1147	112
3000	3	3189	4064	4133	4277	4044	5426	5757	6448	5530	542
	1,5	3168	4018	4073	4186	3941	5207	5471	6011	1382	136
4000	3	4002	5080	5149	5293	4856	6441	6773	7464	5530	542
	1,5	3981	5034	5089	5202	4754	6222	6486	7026	1382	136
5000	3	5193	6568	6637	6781	6047	7930	8261	8952	5530	542
	1,5	5172	6523	6578	6690	5945	7711	7975	8515	1382	136



EXAMPLE OF INSTALLATION WITH **EXTRA 1 PLUS**

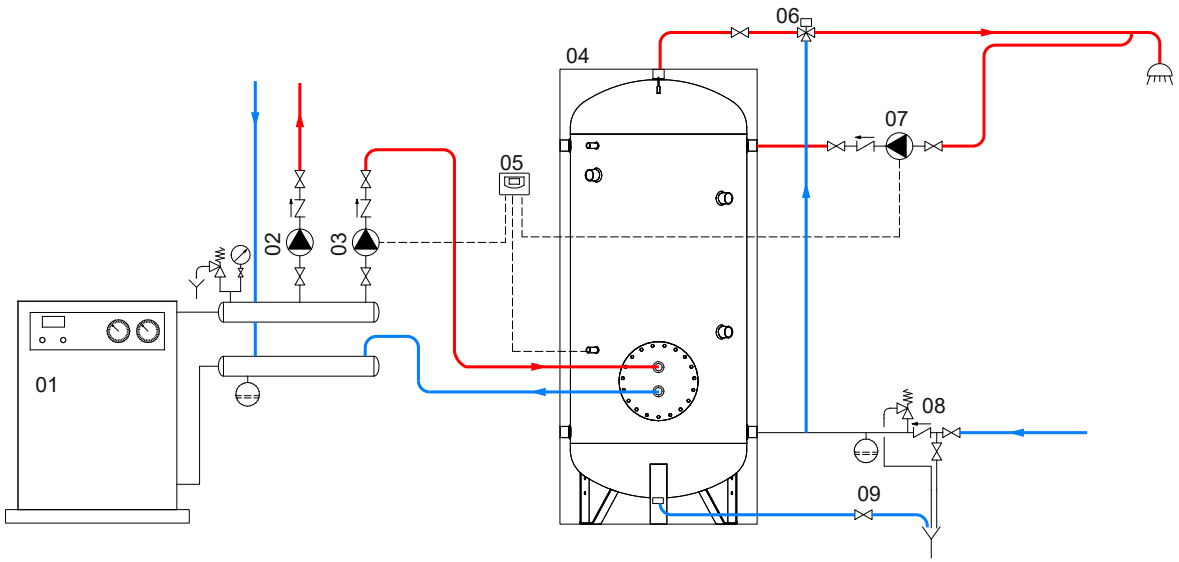

1	Generator	04	EXTRA 1 PLUS	07	D.H.W. recirculation group
2	Heating system circulation group	05	FULL CONTROL electronic unit / thermostat	08	Hydraulic safety group
3	D.H.W. circulation group	06	Thermostatic mixing valve	09	Blowdown valve

The following schemes are purely illustrative. To realize the installation, always refer to a qualified technician.

PRESSURE DROP AND PERFORMANCE CHARTS AT PAGE 170-171

EXTRA **2 PLUS**

POLYWARM® COATED CALORIFIERS WITH 2 EXTRACTABLE FINNED COPPER HEAT EXCHANGERS



APPLICATION
Production and storage of domestic hot water (DHW).
MATERIAL
Mild steel Polywarm® coated (Attestation ACS - EN 16421)
HEAT EXCHANGER
Nr. 2 copper finned and tinned heat exchangers.
INSULATION
HARD: High thermal insulation with ecological polyurethane hard foam.
SOFT (DISMOUNTABLE): NOFIRE® polyester fleece 100% made of recyclable material, with high thermal insulation. Fire resistance class B-s2d0 according to EN 13501.
Grey PVC external lining.

CATHODE PROTECTION
Magnesium anode. Models > 1500 Nr. 2 magnesium anodes.
DRAIN
External confluence through drain connection. Models > 1000 external confluence through drain pipe.
GASKET- FLANGE PLATE
Silicone gaskets suitable for water intended for human consumption (tested according to 98/83/CE), max temperature up to 200°C. Mild steel inspection flange plate Polywarm® coated.
WARRANTY
5 years (See general sales conditions and warranty)
ACCESSORIES AND SPARE PARTS
See Accessories section for the entire list.

POLYWARM® COATED DHW STORAGE

		Model	Art. Nr.	Heat exchangers surface Lower [m²]	Heat exchangers surface Upper [m²]	ErP ENERGY EFFICIENCY CLASS
		**200**	3084162352301	0,76	0,76	**B**
		300	3084162352302	0,94	0,76	**C**
		500	3084162352303	1,58	0,76	**C**
		800	3084162352310	2,63	0,94	**B**
		1000	3084162352311	3,17	1,58	**C**
		1500	3084162352312	4,54	2,63	**C**
		2000	3084162352313	5,26	3,17	**B**
EXTRA 2 PLUS WRB HARD FOAM INSULATION						
		**500**	3082162352333	1,58	0,76	**C**
		800	3082162352340	2,63	0,94	**C**
		1000	3082162352341	3,17	1,58	**C**
		1500	3082162352342	4,54	2,63	**C**
		2000	3082162352343	5,26	3,17	**C**
		2500	3082162352344	6,34	4,54	
		3000	3082162352345	6,34	5,26	
		4000	3082162352346	6,34	6,34	
		5000	3082162352347	6,34	6,34	
EXTRA 2 PLUS WRC DISMOUNTABLE SOFT FLEECE INSULATION						

ACCESSORIES

ELECTRIC IMMERSION HEATERS

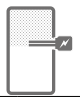

Mod.	Heated volume by electric immersion heater [lt]	MONOPHASE 1,5 kW	MONOPHASE 2 kW	MONOPHASE 3 kW	THREEPHASE 4 kW	THREEPHASE 5 kW	THREEPHASE 6 kW	THREEPHASE 9 kW	THREEPHASE 12 kW
		5240000000051	5240000000052	5240000000053	5240000000047	5240000000048	5240000000049	5240000000050	5240000000031
		Ignition time from 10 °C to 45 °C with electric immersion heaters [min]			Ignition time from 10 °C to 45 °C with electric immersion heaters [min]				
200	49	87	65	44	33	//	//	//	//
300	76	136	102	68	51	//	//	//	//
500	127	228	171	114	85	68	57	//	//
800	178	318	239	159	120	96	80	//	//
1000	243	436	327	218	163	131	109	73	54
1500	288	516	387	258	194	155	129	86	65
2000	443	793	595	396	297	238	198	132	99
2500	577	1033	775	517	387	310	258	172	129
3000	577	1033	775	517	387	310	258	172	129
4000	797	1428	1071	714	535	428	357	238	178
5000	1040	1864	1398	932	699	559	466	311	233

FULL CONTROL electronic unit (mounted on tank)

Art. Nr.	for models
5220280000004	WRC
5220280000005	WRB



Thermometer

Art. Nr.
5032240000107
5 units box



Titanium anode

Art. Nr.	Model
5200000000008	200, 300
5200000000009	500, 800
5200000000011	1000, 1500
5200000000013	2000



Products designed and manufactured for using within temperature and pressure limits in accordance to Art. 4.3 Directive 2014/68/EU (P.E.D.)

EXTRA **2 PLUS**

POLYWARM® COATED CALORIFIERS WITH 2 EXTRACTABLE FINNED COPPER HEAT EXCHANGERS

	STORAGE		HEAT EXCHANGER	
Model	Pmax	Tmax	Pmax	Tmax
200 ÷ 1000	8 bar	90 °C	12 bar	110 °C
1500 ÷ 5000	6 bar			

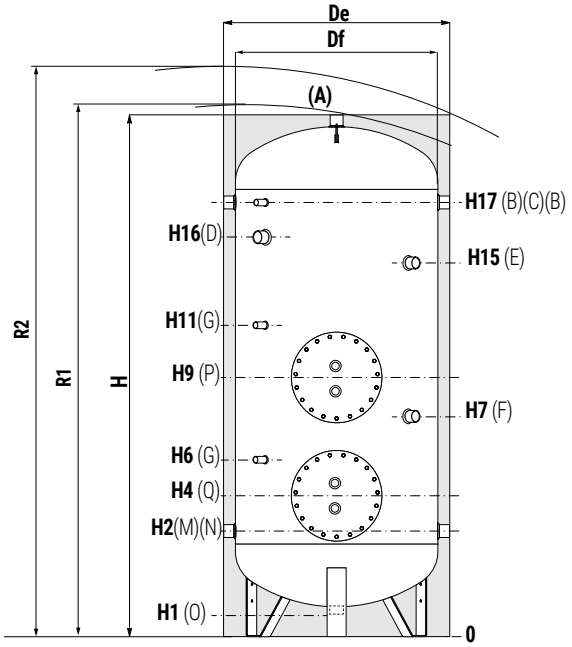

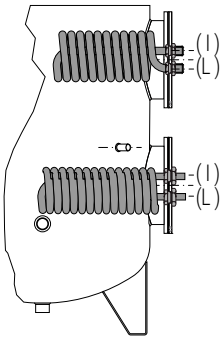

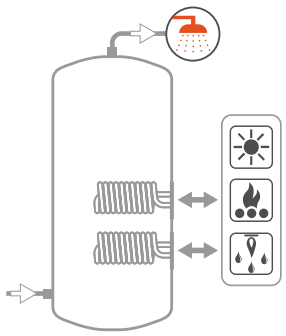

A	Domestic hot water outlet
B	Recirculation / Domestic hot water outlet
C-G	Connection for instrumentation G 1/2" F
D	Connection for electric immersion heater G 1" 1/2 F (for models >800 connection G 2" F)
E	Connection for 2nd magnesium anode G 1"1/4 F (only for models > 1500)
F	Connection for magnesium anode G 1"1/4 F
I	Primary circuit inlet
L	Primary circuit outlet
M	Domestic cold water circuit inlet
N	Alternative domestic cold water circuit inlet or connection for more tanks in series
O	Drain
P	Upper heat exchanger flange
Q	Lower heat exchanger flange

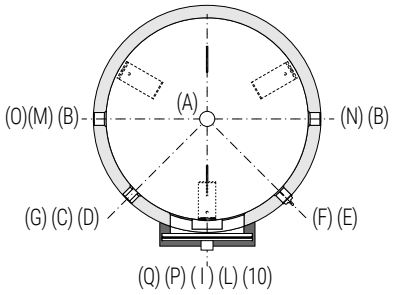

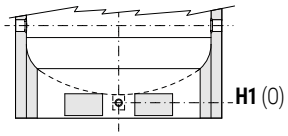

Models from 1500 to 5000 are equipped with a practical skirt support which facilitate the handling with transpallets and forklifts. Also, discharge piping already mounted to allow total emptying.

EXTRA 2 PLUS WRB - HARD FOAM INSULATION

Model	Volume	De	H	R2	H1	H2	H4	H6	H7	H9	H11	H15	H16	H17	P Q	A	B-M-N	O	I-L inf.	I-L sup.
	[lt]	[mm]														Connections F				
200	193	550	1449	1560	85	325	410	520	650	860	970	//	1075	1185	Øi220/Øe300	1"1/4	1"1/4	1"1/4	1"	1"
300	295	650	1499	1640	85	350	435	545	735	885	995	//	1100	1210	Øi220/Øe300	1"1/4	1"1/4	1"1/4	1"	1"
500	503	750	1800	1960	85	375	460	570	760	910	1020	//	1329	1485	Øi220/Øe300	1"1/4	1"1/4	1"1/4	1"	1"
800	794	900	2135	2330	85	405	540	690	870	1090	1240	//	1610	1765	Øi300/Øe380	1"1/4	1"1/4	1"1/4	1"	1"
1000	1043	1000	2221	2450	105	458	593	743	993	1143	1293	//	1664	1818	Øi300/Øe380	1"1/2	1"1/2	1"1/2	1"	1"
1500	1445	1100	2415	2660	109	440	675	825	1075	1250	1400	//	1895	2050	Øi300/Øe380	2"	1"1/2	1"	1"1/4	1"
2000	1977	1300	2492	2820	91	467	692	867	842	1262	1437	1952	1877	2057	Øi350/Øe430	2"	2"	1"	1"1/4	1"

Net volume data according to EN 15332 available on product label.

EXTRA 2 PLUS WRC - DISMOUNTABLE SOFT FLEECE INSULATION

Model	Volume	De	Df	H	R1	R2	H1	H2	H4	H6	H7	H9	H11	H15	H16	H17	P Q	A	B-M-N	O	I-L inf.	I-L sup.
	[lt]	[mm]																Connections F				
500	503	870	650	1841	1990	2090	101	416	501	611	801	951	1061	//	1370	1526	Øi220/Øe300	1"1/4	1"1/4	1"1/4	1"	1"
800	794	970	750	2188	2220	2400	113	433	518	628	898	1118	1228	//	1638	1793	Øi300/Øe380	1"1/4	1"1/4	1"1/4	1"	1"
1000	1043	1070	850	2242	2270	2490	101	454	539	649	989	1139	1249	//	1660	1814	Øi300/Øe380	1"1/2	1"1/2	1"1/2	1"	1"
1500	1445	1210	950	2440	2495	2730	109	440	525	635	1075	1250	1360	//	1895	2050	Øi300/Øe380	2"	1"1/2	1"	1"1/4	1"
2000	1977	1360	1100	2492	2570	2850	91	467	542	652	842	1262	1372	1952	1877	2057	Øi350/Øe430	2"	2"	1"	1"1/4	1"
2500	2313	1350	1250	2311	2480	2690	140	551	626	736	876	1201	1311	1816	1732	1891	Øi350/Øe430	2"	2"	1"	1"1/4	1"1/4
3000	2919	1350	1250	2811	2950	3130	140	551	626	736	876	1476	1586	2316	2232	2391	Øi350/Øe430	2"	2"	1"	1"1/4	1"1/4
4000	3767	1500	1400	2875	3050	3250	114	570	645	755	895	1495	1605	2315	2238	2410	Øi350/Øe430	2"	2"	1"	1"1/4	1"1/4
5000	4981	1700	1600	2915	3130	3380	94	580	655	765	935	1505	1615	2335	2265	2420	Øi350/Øe430	2"	2"	1"	1"1/4	1"1/4

Net volume data according to EN 15332 available on product label.

Products designed and manufactured for using within temperature and pressure limits in accordance to Art. 4.3 Directive 2014/68/EU (P.E.D.)

EXTRA **2 PLUS**

HEAT EXCHANGERS TECHNICAL DATA



Data have been calculated on following basis:
1) Primary circuit at T1 and proper energy source;
2) Production of DHW in continuous from 10 °C to t2;
3) DHW that can be taken in the first 10' and in the first hour from storage at t2, input 10 °C and output 45 °C;
4) Non-scaling sanitary water

UPPER
HEAT EXCHANGER

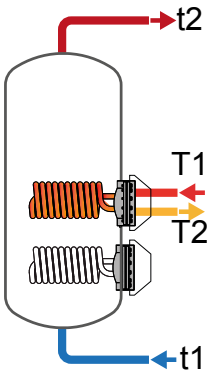

Model	Primary flow rate	Ignition time (minutes) from 10 °C to t2 and primary at T1				Maximum power exchange (kW) with primary at T1, secondary within 10-45 °C and constant use of DHW production				DHW continuous production lt/h within 10-45 °C and primary at T1HW production			
	[m³/h]	T1/t2				T1				T1			
		55/50	65/60	70/60	80/60	55	65	70	80	55	65	70	80
200	1,4	58	58	39	24	7	11	14	19	172	270	342	467
	0,7	64	64	43	27	6	10	12	17	147	246	295	418
300	1,4	89	89	59	36	7	11	14	19	172	270	342	467
	0,7	96	96	64	40	6	10	12	17	147	246	295	418
500	1,4	175	175	115	70	7	11	14	19	172	270	342	467
	0,7	192	193	127	79	6	10	12	17	147	246	295	418
800	1,4	247	248	162	99	9	14	17	24	214	353	428	586
	0,7	274	276	182	112	8	13	16	21	203	329	396	535
1000	1,4	187	187	125	77	14	23	28	37,4	347	565	680	923
	0,7	213	216	145	91	13	21	25	33	321	509	606	809
1500	1,4	168	170	115	72	23	36	44	56	562	900	1076	1443
	0,7	204	208	142	91	21	32	38	49	510	789	931	1222
2000	1,4	201	203	138	87	27	43	51	68	668	1062	1265	1688
	0,7	249	254	174	112	24	37	44	57	602	921	1082	1409
2500	3	126	126	85	53	40	65	77	104	988	1594	1910	2577
	1,5	146	148	102	65	37	57	68	90	906	1417	1678	2218
3000	3	160	161	109	69	46	74	88	118	1133	1820	2177	2925
	1,5	190	193	132	85	42	65	77	101	1033	1605	1895	2493
4000	3	176	178	121	76	55	87	104	139	1349	2150	2564	3428
	1,5	212	217	149	96	50	76	89	117	1221	1876	2206	2881
5000	3	234	236	160	101	55	87	104	139	1349	2150	2564	3428
	1,5	282	288	198	127	50	76	89	117	1221	1876	2206	2881

Model	Primary flow rate	DHW produced in the first 10 minutes in lt/10' input 10 °C output 45 °C, storage at t2 and primary at T1				DHW produced in the first hour in lt/60' input 10 °C output 45 °C, storage at t2 and primary at T1				Heat exchanger pressure drop	
	[m³/h]	T1/t2				T1/t2				[mmH$_2$O]	[mbar]
		55/50	65/60	70/60	80/60	55/50	65/60	70/60	80/60		
200	1,4	138	182	194	215	247	353	410	511	895	88
	0,7	134	178	186	207	228	334	373	471	223	22
300	1,4	198	256	268	289	307	428	485	585	895	88
	0,7	194	252	261	281	287	408	447	546	223	22
500	1,4	351	448	460	481	460	619	676	776	895	88
	0,7	347	444	452	472	440	599	639	737	223	22
800	1,4	519	663	676	702	655	887	947	1073	1936	190
	0,7	517	659	670	693	646	867	921	1032	484	47
1000	1,4	744	951	970	1011	963	1309	1401	1596	1861	183
	0,7	739	942	958	992	943	1264	1342	1504	465	46
1500	1,4	1033	1324	1354	1415	1389	1894	2035	2329	3097	304
	0,7	1024	1306	1329	1378	1347	1805	1919	2152	774	76
2000	1,4	1422	1816	1849	1920	1845	2488	2651	2989	3733	366
	0,7	1411	1792	1819	1873	1792	2375	2504	2766	933	91
2500	3	1472	1900	1953	2064	2098	2909	3162	3696	2878	282
	1,5	1458	1870	1914	2004	2032	2768	2977	3409	720	71
3000	3	2081	2669	2729	2853	2799	3822	4107	4706	2878	282
	1,5	2065	2633	2682	2781	2719	3650	3882	4360	720	71
4000	3	2657	3398	3467	3611	3511	4760	5091	5782	5530	542
	1,5	2636	3353	3408	3520	3409	4541	4805	5345	1382	136
5000	3	3441	4378	4447	4591	4295	5740	6071	6762	5530	542
	1,5	3420	4333	4388	4500	4193	5521	5785	6325	1382	136

PRESSURE DROP AND PERFORMANCE CHARTS AT PAGE 170-171

EXTRA **2 PLUS**

HEAT EXCHANGERS TECHNICAL DATA



LOWER
HEAT EXCHANGER

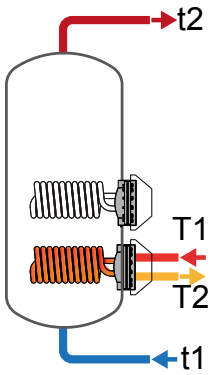

Model	Primary flow rate	Ignition time (minutes) from 10 °C to t2 and primary at T1				Maximum power exchange (kW) with primary at T1, secondary within 10-45 °C and constant use of DHW production				DHW continuous production lt/h within 10-45 °C and primary at T1HW production			
	[m³/h]	T1/t2				T1				T1			
		55/50	65/60	70/60	80/60	55	65	70	80	55	65	70	80
200	1,4	95	97	65	40	7	11	14	19	172	270	342	467
	0,7	106	107	72	45	6	10	12	17	147	246	295	418
300	1,4	119	118	79	49	9	14	17	24	214	353	428	586
	0,7	130	131	87	54	8	13	16	21	203	329	396	535
500	1,4	132	132	89	55	14	23	28	37	347	565	680	923
	0,7	150	151	103	65	13	21	25	33	321	509	606	809
800	1,4	137	138	94	59	23	36	44	56	562	900	1076	1443
	0,7	164	167	115	73	21	32	38	49	510	789	931	1222
1000	1,4	154	155	105	67	27	43	51	68	668	1062	1265	1688
	0,7	187	191	132	85	24	37	44	57	602	921	1082	1409
1500	3	139	140	95	59	40	65	77	104	988	1594	1910	2577
	1,5	162	164	113	72	37	57	68	90	906	1417	1678	2218
2000	3	168	169	115	72	46	74	88	118	1133	1820	2177	2925
	1,5	199	202	139	89	42	65	77	101	1033	1605	1895	2493
2500	3	163	164	112	71	55	87	104	139	1349	2150	2564	3428
	1,5	197	200	139	102	50	76	89	117	1221	1876	2206	2881
3000	3	214	216	147	93	55	87	104	139	1349	2150	2564	3428
	1,5	258	263	181	117	50	76	89	117	1221	1876	2206	2881
4000	3	274	276	187	118	55	87	104	139	1349	2150	2564	3428
	1,5	330	337	232	149	50	76	89	117	1221	1876	2206	2881
5000	3	361	364	247	156	55	87	104	139	1349	2150	2564	3428
	1,5	436	445	305	196	50	76	89	117	1221	1876	2206	2881

Model	Primary flow rate	DHW produced in the first 10 minutes in lt/10' input 10 °C output 45 °C, storage at t2 and primary at T1				DHW produced in the first hour in lt/60' input 10 °C output 45 °C, storage at t2 and primary at T1				Heat exchanger pressure drop	
	[m³/h]	T1/t2				T1/t2				[mmH$_2$O]	[mbar]
		55/50	65/60	70/60	80/60	55/50	65/60	70/60	80/60		
200	1,4	212	274	285	306	320	445	502	602	895	88
	0,7	207	270	278	298	301	425	464	563	223	22
300	1,4	313	406	418	445	449	630	690	816	1936	190
	0,7	312	402	413	436	440	610	664	775	484	47
500	1,4	547	706	725	765	767	1063	1155	1350	1861	183
	0,7	543	696	712	746	746	1019	1096	1259	465	46
800	1,4	896	1153	1182	1243	1252	1723	1864	2157	3097	304
	0,7	887	1134	1158	1207	1210	1634	1748	1980	774	76
1000	1,4	1158	1486	1519	1590	1581	2158	2321	2659	3733	366
	0,7	1147	1462	1489	1543	1528	2045	2174	2436	933	91
1500	3	1622	2087	2140	2251	2248	3097	3349	3883	2878	282
	1,5	1608	2058	2101	2191	2182	2955	3164	3596	720	71
2000	3	2185	2799	2859	2983	2903	3952	4237	4836	2878	282
	1,5	2169	2763	2812	2911	2823	3780	4012	4490	720	71
2500	3	2496	3197	3266	3410	3350	4559	4890	5581	4588	450
	1,5	2474	3151	3206	3319	3248	4339	4603	5143	1147	112
3000	3	3189	4064	4133	4277	4044	5426	5757	6448	5530	542
	1,5	3168	4018	4073	4186	3941	5207	5471	6011	1382	136
4000	3	4002	5080	5149	5293	4856	6441	6773	7464	5530	542
	1,5	3981	5034	5089	5202	4754	6222	6486	7026	1382	136
5000	3	5193	6568	6637	6781	6047	7930	8261	8952	5530	542
	1,5	5172	6523	6578	6690	5945	7711	7975	8515	1382	136

EXAMPLE OF INSTALLATION WITH **EXTRA 2 PLUS**

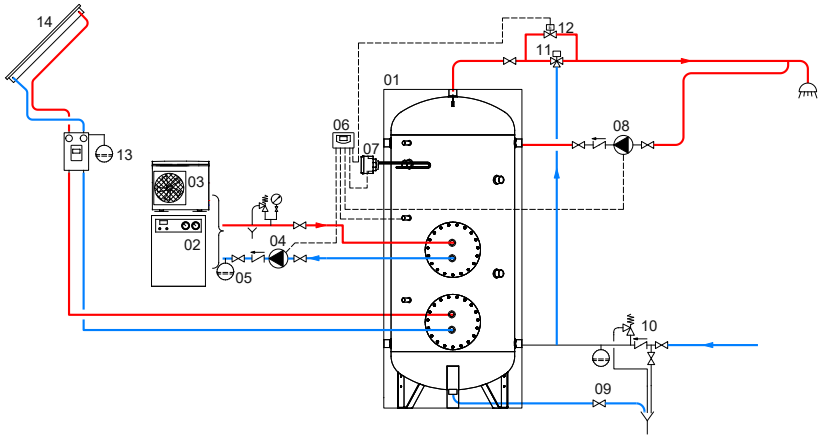

1	Extra 2 Plus	5	Expansion vessel	9	Blowdown valve	13	Solar system circulation group
2	Generator	6	FULL CONTROL electronic unit / thermostat	10	Hydraulic safety group	14	Solar panels
3	Generator (Heat pump)	7	Electric immersion heater (optional)	11	Thermostatic mixing valve		
4	Circulation group	8	D.H.W. recirculation group	12	By-pass solenoid valve		

The following schemes are purely illustrative. To realize the installation, always refer to a qualified technician.

EXTRA **3 PLUS**

POLYWARM® COATED CALORIFIERS WITH 3 EXTRACTABLE FINNED COPPER HEAT EXCHANGERS



POLYWARM® COATED DHW STORAGE

APPLICATION
Production and storage of domestic hot water (DHW).
MATERIAL
Mild steel Polywarm® coated (Attestation ACS - EN 16421)
HEAT EXCHANGER
Nr. 3 copper finned and tinned heat exchangers.
INSULATION
SOFT (DISMOUNTABLE): NOFIRE® polyester fleece 100% made of recyclable material, with high thermal insulation. Fire resistance class B-s2d0 according to EN 13501.
Grey PVC external lining.

CATHODE PROTECTION
Magnesium anode. Models > 1500 Nr. 2 magnesium anodes.
DRAIN
External confluence through drain connection.
GASKET- FLANGE PLATE
Silicone gaskets suitable for water intended for human consumption (tested according to 98/83/CE), max temperature up to 200°C. Mild steel inspection flange plate Polywarm® coated.
WARRANTY
5 years (See general sales conditions and warranty)
ACCESSORIES AND SPARE PARTS
See Accessories section for the entire list.





EXTRA 3 PLUS WRC
DISMOUNTABLE SOFT FLEECE INSULATION

Model	Art. Nr.	Heat exchangers surface [m²] Lower	Middle	Upper	ErP ENERGY EFFICIENCY CLASS
500	3092162352340	1,58	0,76	0,76	C
1000	3092162352341	3,17	1,58	0,94	C
1500	3092162352342	4,54	2,63	1,58	C
2000	3092162352343	5,26	4,54	2,63	
3000	3092162352345	6,34	5,26	3,17	
5000	3092162352347	6,34	6,34	5,26	

ACCESSORIES

FULL CONTROL electronic unit (mounted on tank)

Art. Nr.	for models
5220280000004	WRC



Thermometer

Art. Nr.
5032240000107
5 units box



Titanium anode

Art. Nr.	Model
5200000000011	1500
5200000000013	2000÷5000



HEAT MANAGER + electric immersion heater 1,5 kW + probe +3m cable

Art. Nr.	Output [kW]
5240000000074	1,5
5240000000075	2
5240000000076	3



Products designed and manufactured for using within temperature and pressure limits in accordance to Art. 4.3 Directive 2014/68/EU (P.E.D.)

EXTRA **3 PLUS**

POLYWARM® COATED CALORIFIERS WITH 3 EXTRACTABLE FINNED COPPER HEAT EXCHANGERS

STORAGE		HEAT EXCHANGER	
Pmax	Tmax	Pmax	Tmax
6 bar	90 °C	12 bar	110 °C

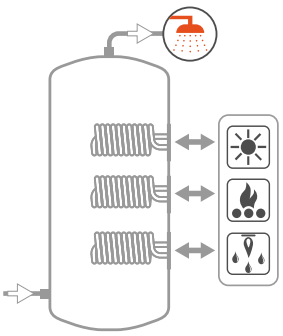

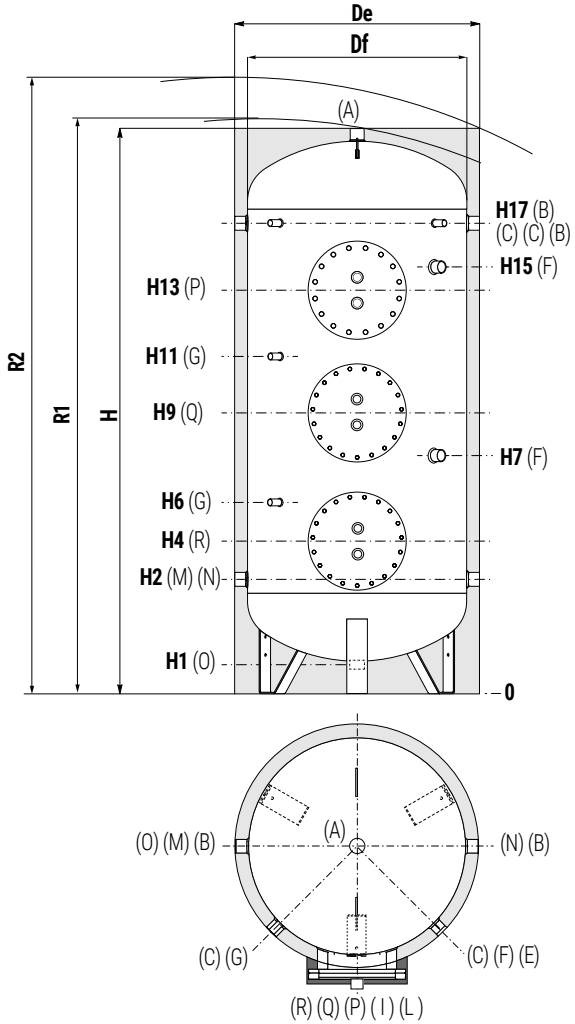

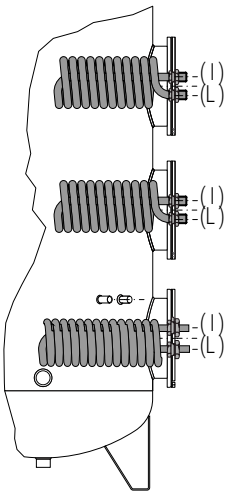

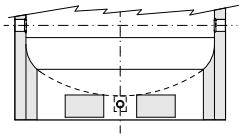

A	Domestic hot water outlet
B	Recirculation / Domestic hot water outlet 1" 1/2 F
C-G	Connection for instrumentation G 1/2" F
E	Connection for 2nd magnesium anode 1"1/4 F (only for models > 1500)
F	Connection for magnesium anode 1"1/4 F
I	Primary circuit inlet
L	Primary circuit outlet
M	Domestic cold water circuit inlet
N	Alternative domestic cold water circuit inlet or connection for more tanks in series
O	Drain
P	Upper heat exchanger flange
Q	Middle heat exchanger flange
R	Lower heat exchanger flange

Models are equipped with a practical skirt support which facilitate the handling with transpallets and forklifts. Also, discharge piping already mounted to allow total emptying.

Mod.	Volume	Weight	De	Df	H	R1	R2	H1	H2	H4	H6	H7
	[lt]	[kg]	[mm]									
500	500	120	870	650	1891	1990	2090	126	416	501	611	801
1000	1360	220	1070	850	2198	2240	3140	89	454	562	649	989
1500	1455	227	1210	950	2440	2495	2730	109	440	675	825	1075
2000	1991	278	1360	1100	2492	2570	2850	91	467	692	867	842
3000	2933	377	1350	1250	2811	2950	3130	140	551	836	1011	1036
5000	4996	634	1700	1600	2915	3130	3380	94	580	855	1030	1035

Mod.	H9	H11	H15	H16	H17	R-Q	P	A-B-M-N	O	I-L Lower	I-L middle	I-L upper
	[mm]							Connections F				
500	951	1061	1401	//	1526	Øi220/Øe300	Øi220/Øe300	1"1/4	1"1/4	1"	1"	1"
1000	1112	1249	1612	//	1760	Øi300/Øe380	Øi300/Øe380	1"1/2	1"1/2	1"	1"	1"
1500	1250	1400	1875	//	2050	Øi300/Øe380	Øi300/Øe380	2"	1"	1"1/4	1"	1"
2000	1262	1437	1817	1592	2057	Øi350/Øe430	Øi300/Øe380	2"	1"	1"1/4	1"1/4	1"
3000	1476	1651	2176	1926	2391	Øi350/Øe430	Øi300/Øe380	2"	1"	1"1/4	1"1/4	1"
5000	1505	1680	2115	1855	2420	Øi350/Øe430	Øi350/Øe430	2"	1"	1"1/4	1"1/4	1"1/4

Net volume data according to EN 15332 available on product label.

Products designed and manufactured for using within temperature and pressure limits in accordance to Art. 4.3 Directive 2014/68/EU (P.E.D.)

EXTRA **3 PLUS**

HEAT EXCHANGERS TECHNICAL DATA



Data have been calculated on following basis:
1) Primary circuit at T1 and proper energy source;
2) Production of DHW in continuous from 10 °C to t2;
3) DHW that can be taken in the first 10' and in the first hour from storage at t2, input 10 °C and output 45 °C;
4) Non-scaling sanitary water

UPPER HEAT EXCHANGER

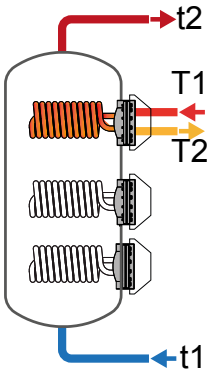

Model	Primary flow rate	Ignition time (minutes) from 10 °C to t2 and primary at T1				Maximum power exchange (kW) with primary at T1, secondary within 10-45 °C and constant use of DHW production				DHW continuous production lt/h within 10-45 °C and primary at T1HW production			
	[m³/h]	T1/t2				T1				T1			
		55/50	65/60	70/60	80/60	55	65	70	80	55	65	70	80
500	1,4	175	175	115	70	7	11	14	19	172	270	342	467
	0,7	192	193	127	79	6	10	12	17	147	246	295	418
1000	1,4	247	248	162	99	9	14	17	24	214	353	428	586
	0,7	274	276	182	112	8	13	16	21	203	329	396	535
1500	1,4	122	122	81	50	14,1	22,9	27,6	37,4	562	900	1076	1443
	0,7	142	144	96	60	13	21	25	33	510	789	931	1222
2000	1,4	122	123	83	52	23	36	44	56	668	1062	1265	1688
	0,7	148	151	103	66	21	32	38	49	602	921	1082	1409
3000	1,4	128	129	87	56	27	43	51	68	668	1062	1265	1688
	0,7	156	159	110	71	24	37	44	57	602	921	1082	1409
5000	3	154	156	105	66	46	74	88	118	1349	2150	2564	3428
	1,5	183	186	127	81	42	65	77	101	1221	1876	2206	2881

Model	Primary flow rate	DHW produced in the first 10 minutes in lt/10' input 10 °C output 45 °C, storage at t2 and primary at T1				DHW produced in the first hour in lt/60' input 10 °C output 45 °C, storage at t2 and primary at T1				Heat exchanger pressure drop	
	[m³/h]	T1/t2				T1/t2				[mmH$_2$O]	[mbar]
		55/50	65/60	70/60	80/60	55/50	65/60	70/60	80/60		
500	1,4	178	232	244	265	287	403	460	561	895	88
	0,7	174	228	236	257	268	384	423	521	223	22
1000	1,4	325	420	433	459	460	644	704	830	1936	190
	0,7	323	416	427	451	452	625	678	789	484	47
1500	1,4	456	603	632	693	812	1173	1314	1607	1861	182,5
	0,7	447	584	608	657	770	1084	1198	1430	465	45,6
2000	1,4	694	906	939	1010	1117	1578	1741	2079	3097	303,7
	0,7	683	882	909	963	1064	1465	1594	1856	774	75,9
3000	1,4	902	1166	1199	1270	1325	1838	2001	2339	3733	366
	0,7	891	1142	1169	1223	1272	1725	1854	2116	933	91,5
5000	3	1831	2365	2434	2578	2685	3727	4058	4750	2878	282,2
	1,5	1809	2320	2375	2487	2583	3508	3772	4312	720	70,6

MIDDLE HEAT EXCHANGER

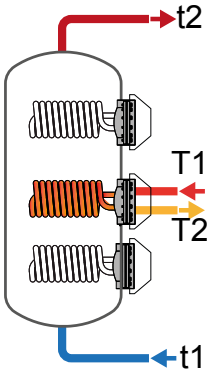

Model	Primary flow rate	Ignition time (minutes) from 10 °C to t2 and primary at T1				Maximum power exchange (kW) with primary at T1, secondary within 10-45 °C and constant use of DHW production				DHW continuous production lt/h within 10-45 °C and primary at T1HW production			
	[m³/h]	T1/t2				T1				T1			
		55/50	65/60	70/60	80/60	55	65	70	80	55	65	70	80
500	1,4	175	175	115	70	7	11	14	19	172	270	342	467
	0,7	192	193	127	79	6	10	12	17	147	246	295	418
1000	1,4	187	187	125	77	14	23	28	37	347	565	680	923
	0,7	213	216	145	91	13	21	25	33	321	509	606	809
1500	1,4	168	170	115	72	23	36	44	56	562	900	1076	1443
	0,7	204	208	142	91	21	32	38	49	510	789	931	1222
2000	3	136	134	91	57	40	65	77	104	988	1594	1910	2577
	1,5	162	165	113	71	37	57	68	90	906	1417	1678	2218
3000	3	160	161	109	69	46	74	88	118	1133	1820	2177	2925
	1,5	190	193	132	85	42	65	77	101	1033	1605	1895	2493
5000	3	234	236	160	101	55	87	104	139	1349	2150	2564	3428
	1,5	282	288	198	127	50	76	89	117	1221	1876	2206	2881

Model	Primary flow rate	DHW produced in the first 10 minutes in lt/10' input 10 °C output 45 °C, storage at t2 and primary at T1				DHW produced in the first hour in lt/60' input 10 °C output 45 °C, storage at t2 and primary at T1				Heat exchanger pressure drop	
	[m³/h]	T1/t2				T1/t2				[mmH$_2$O]	[mbar]
		55/50	65/60	70/60	80/60	55/50	65/60	70/60	80/60		
500	1,4	346	442	454	475	455	613	670	771	1861	183
	0,7	342	438	446	467	436	594	633	731	465	46
1000	1,4	684	877	896	937	904	1235	1327	1521	3733	366
	0,7	680	868	884	918	883	1190	1268	1430	933	91
1500	1,4	1033	1324	1354	1415	1389	1894	2035	2329	3097	303,7
	0,7	1024	1306	1329	1378	1347	1805	1919	2152	774	75,9
2000	3	1476	1904	1957	2068	2101	2914	3167	3700	2878	282,2
	1,5	1462	1875	1918	2008	2036	2772	2981	3413	720	70,6
3000	3	2081	2669	2729	2853	2799	3822	4107	4706	2878	282,2
	1,5	2065	2633	2682	2781	2719	3650	3882	4360	720	70,6
5000	3	3441	4378	4447	4591	4295	5740	6071	6762	5530	542,3
	1,5	3420	4333	4388	4500	4193	5521	5785	6325	1382	135,5

PRESSURE DROP AND PERFORMANCE CHARTS AT PAGE 170-171

EXTRA **3 PLUS**

HEAT EXCHANGERS TECHNICAL DATA



Data have been calculated on following basis:
1) Primary circuit at T1 and proper energy source;
2) Production of DHW in continuous from 10 °C to t2;
3) DHW that can be taken in the first 10' and in the first hour from storage at t2, input 10 °C and output 45 °C;
4) Non-scaling sanitary water

LOWER
HEAT EXCHANGER

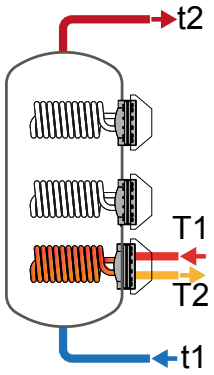

Model	Primary flow rate	Ignition time (minutes) from 10 °C to t2 and primary at T1				Maximum power exchange (kW) with primary at T1, secondary within 10-45 °C and constant use of DHW production				DHW continuous production lt/h within 10-45 °C and primary at T1HW production			
	[m³/h]	T1/t2				T1				T1			
		55/50	65/60	70/60	80/60	55	65	70	80	55	65	70	80
500	1,4	132	132	89	55	14	23	28	37	347	565	680	923
	0,7	150	151	103	65	13	21	25	33	321	509	606	809
1000	1,4	154	155	105	67	27	43	51	68	668	1062	1265	1688
	0,7	187	191	132	85	24	37	44	57	602	921	1082	1409
1500	3	139	140	95	59	40	65	77	104	988	1594	1910	2577
	1,5	162	164	113	72	37	57	68	90	906	1417	1678	2218
2000	3	168	169	115	72	46	74	88	118	1133	1820	2177	2925
	1,5	199	202	139	89	42	65	77	101	1033	1605	1895	2493
3000	3	214	216	147	93	55	87	104	139	1349	2150	2564	3428
	1,5	258	263	181	117	50	76	89	117	1221	1876	2206	2881
5000	3	361	364	247	156	55	87	104	139	1349	2150	2564	3428
	1,5	436	445	305	196	50	76	89	117	1221	1876	2206	2881

Model	Primary flow rate	DHW produced in the first 10 minutes in lt/10' input 10 °C output 45 °C, storage at t2 and primary at T1				DHW produced in the first hour in lt/60' input 10 °C output 45 °C, storage at t2 and primary at T1				Heat exchanger pressure drop	
	[m³/h]	T1/t2				T1/t2				[mmH$_2$O]	[mbar]
		55/50	65/60	70/60	80/60	55/50	65/60	70/60	80/60		
500	1,4	549	708	728	768	769	1066	1158	1353	1861	183
	0,7	545	699	715	749	748	1021	1099	1261	465	46
1000	1,4	1096	1408	1442	1513	1520	2081	2243	2582	3733	366
	0,7	1085	1385	1412	1466	1467	1968	2097	2359	933	91
1500	1,4	1622	2087	2140	2251	2248	3097	3349	3883	2878	282,2
	0,7	1608	2058	2101	2191	2182	2955	3164	3596	720	70,6
2000	1,4	2185	2799	2859	2983	2903	3952	4237	4836	2878	282,2
	0,7	2169	2763	2812	2911	2823	3780	4012	4490	720	70,6
3000	1,4	3189	4064	4133	4277	4044	5426	5757	6448	5530	542,3
	0,7	3168	4018	4073	4186	3941	5207	5471	6011	1382	135,5
5000	3	5193	6568	6637	6781	6047	7930	8261	8952	5530	542,3
	1,5	5172	6523	6578	6690	5945	7711	7975	8515	1382	135,5

EXAMPLE OF INSTALLATION WITH **EXTRA 3 PLUS**

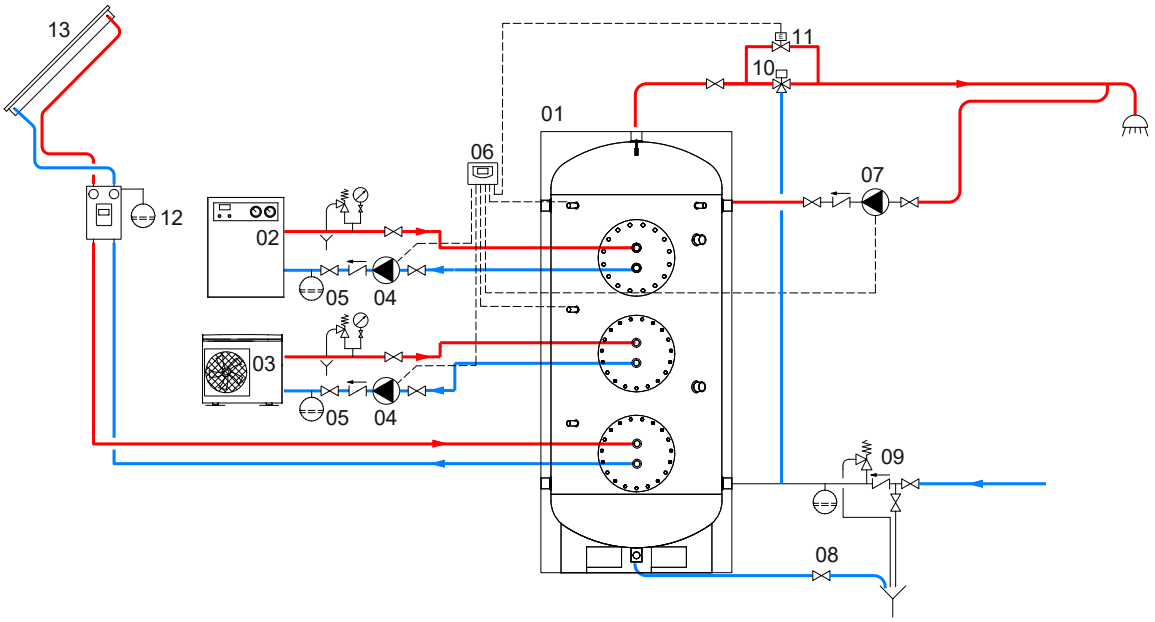

1	Extra 3 Plus	5	Expansion vessel	9	Hydraulic safety group
2	Generator	6	FULL CONTROL electronic unit / thermostat	10	Thermostatic mixing valve
3	Generator (Heat pump)	7	D.H.W. recirculation group	11	By-pass solenoid valve
4	Circulation group	8	Blowdown valve	12	Solar system circulation group
				13	Solar panels

The following schemes are purely illustrative. To realize the installation, always refer to a qualified technician.

Heat exchanger surface [m²]:
0,76 - 0,94 - 1,58 - 2,63 - 3,17

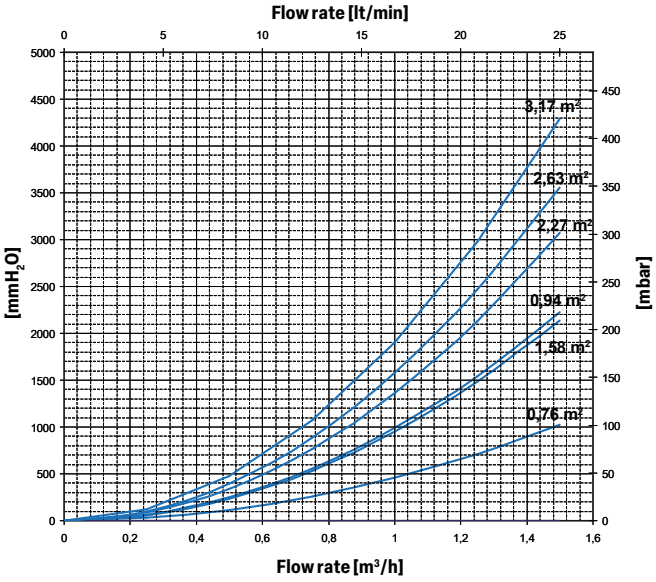

Heat exchanger surface [m²]:
4,54 - 5,26 - 6,34

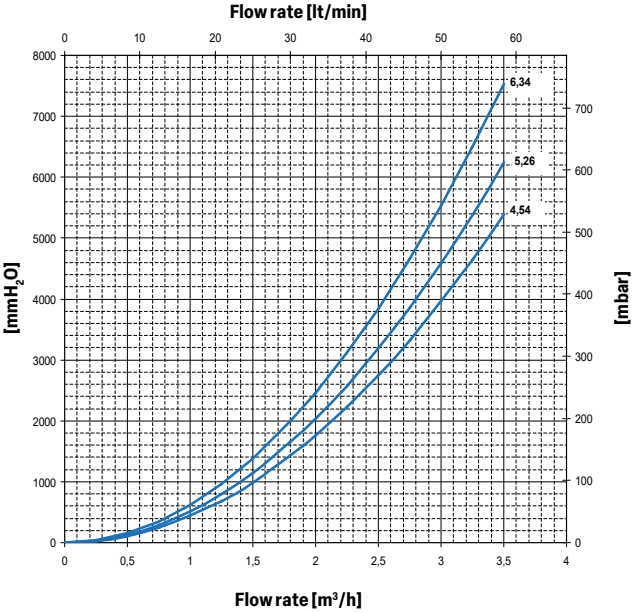

EXTRA **PLUS**
HEAT EXCHANGERS TECHNICAL DATA

Heat Exchanger output referred to temperature and flow rate of primary circuit and with secondary at 10/45°C at maximum withdrawal of producible DHW (Upper limit of the curves referred to maximum primary flow rate in the heat exchanger, while the lower limit in the curve refers to the minimum primary flow rate)

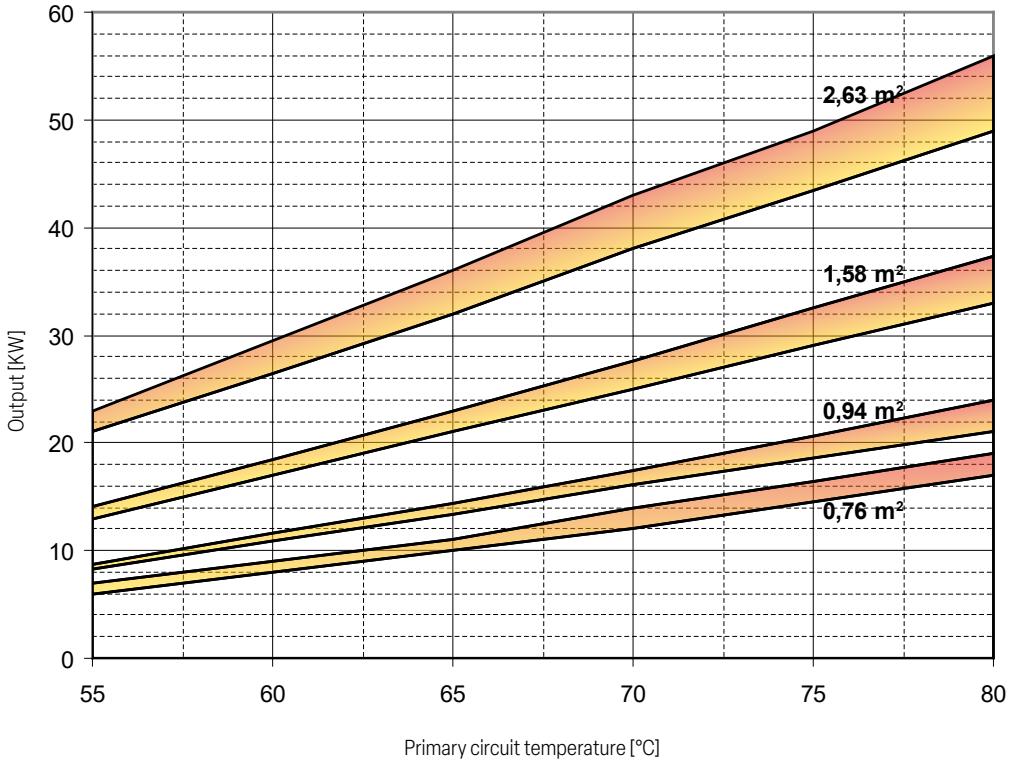

Heat exchanger [m²]	0,76 m²		0,94 m²		1,58 m²		2,63 m²	
Flow rate [m³/h]	MAX	MIN	MAX	MIN	MAX	MIN	MAX	MIN
	1,4	0,7	1,4	0,7	1,4	0,7	1,4	0,7

Heat Exchanger output referred to temperature and flow rate of primary circuit and with secondary at 10/45°C at maximum withdrawal of producible DHW (Upper limit of the curves referred to maximum primary flow rate in the heat exchanger, while the lower limit in the curve refers to the minimum primary flow rate)

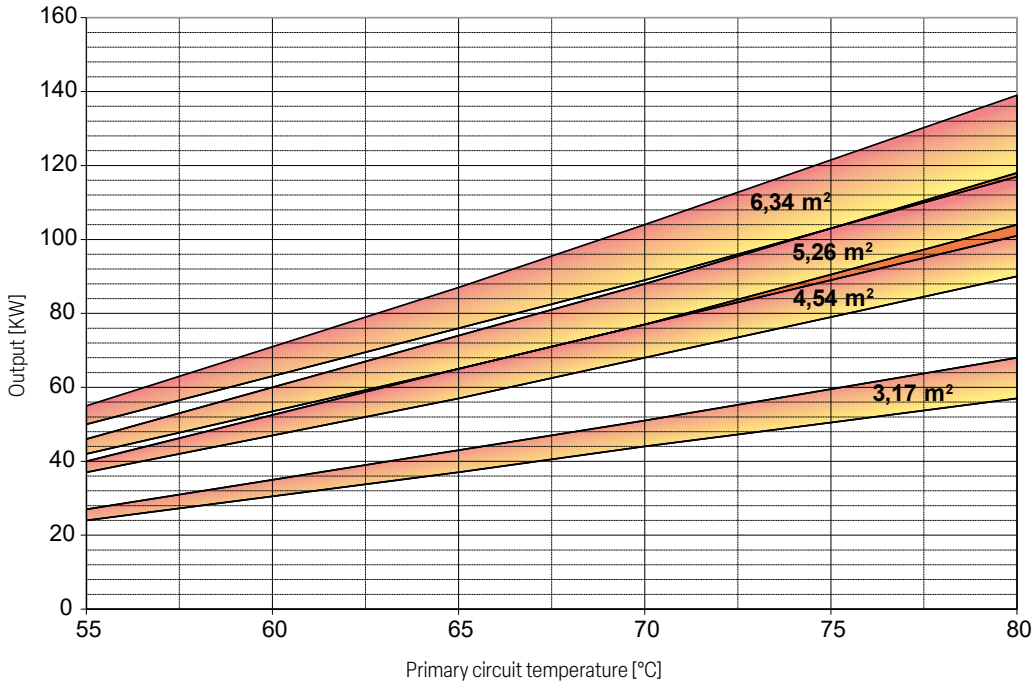

Heat exchanger surface	3,17 m²		4,54 m²		5,26 m²		6,34 m²	
Flow rate [m³/h]	MAX	MIN	MAX	MIN	MAX	MIN	MAX	MIN
	1,4	0,7	3	1,5	3	1,5	3	1,5

VASO **INERZIALE**

POLYWARM® COATED DOMESTIC HOT WATER ACCUMULATION TANK



APPLICATION
Domestic hot water storage.
MATERIAL
Mild steel Polywarm® coated (Attestation ACS - EN 16421)
INSULATION
HARD: High thermal insulation with ecological polyurethane hard foam.
SOFT (DISMOUNTABLE): NOFIRE® polyester fleece 100% made of recyclable material, with high thermal insulation. Fire resistance class B-s2d0 according to EN 13501.
Grey PVC external lining.
CATHODE PROTECTION
Magnesium anode. Models > 1500 Nr. 2 magnesium anodes.

DRAIN
External confluence through drain connection. Models > 1000 external confluence through drain pipe.
WARRANTY
5 years (See general sales conditions and warranty)
ACCESSORIES AND SPARE PARTS
See Accessories section for the entire list.

POLYWARM® COATED DHW STORAGE




VASO INERZIALE WB
HARD FOAM INSULATION

Model	Art. Nr.	ErP ENERGY EFFICIENCY CLASS
200	3060162310110	B
300	3060162310111	C
500	3060162310112	C
800	3060162310113	B
1000	3060162310114	C
1500	3060162310115	C
2000	3060162310116	B




VASO INERZIALE WC
DISMOUNTABLE SOFT FLEECE INSULATION

Model	Art. Nr.	ErP ENERGY EFFICIENCY CLASS
500	3060161620166	C
800	3060161620167	C
1000	3060161620168	C
1500	3060161620169	C
2000	3060161620170	C
2500	3060161620171	
3000	3060161620172	
4000	3060161620173	
5000	3060161620174	

ACCESSORIES

ELECTRIC IMMERSION HEATERS



Mod.	Heated volume by electric immersion heater [lt]	MONOPHASE 1,5 kW	MONOPHASE 2 kW	MONOPHASE 3 kW	THREEPHASE 4 kW	THREEPHASE 5 kW	THREEPHASE 6 kW	THREEPHASE 9 kW	THREEPHASE 12 kW
		5240000000051	5240000000052	5240000000053	5240000000047	5240000000048	5240000000049	5240000000050	5240000000031
		Ignition time from 10 °C to 45 °C with electric immersion heaters [min]			Ignition time from 10 °C to 45 °C with electric immersion heaters [min]				
200	49	87	65	44	33	//	//	//	//
300	76	136	102	68	51	//	//	//	//
500	127	228	171	114	85	68	57	//	//
800	178	318	239	159	120	96	80	//	//
1000	243	436	327	218	163	131	109	73	54
1500	288	516	387	258	194	155	129	86	65
2000	443	793	595	396	297	238	198	132	99
2500	577	1033	775	517	387	310	258	172	129
3000	577	1033	775	517	387	310	258	172	129
4000	797	1428	1071	714	535	428	357	238	178
5000	1040	1864	1398	932	699	559	466	311	233

FULL CONTROL electronic unit (mounted on tank)

Art. Nr.	for models
5220280000004	WC
5220280000005	WB



HEAT MANAGER + electric immersion heater 1,5 kW + probe +3m cable

Art. Nr.	Output [kW]
5240000000074	1,5
5240000000075	2
5240000000076	3



Titanium anode

See Accessories section



Products designed and manufactured for using within temperature and pressure limits in accordance to Art. 4.3 Directive 2014/68/EU (P.E.D.)

VASO **INERZIALE**

POLYWARM® COATED DOMESTIC HOT WATER ACCUMULATION TANK

	STORAGE	
Model	Pmax	Tmax
200 ÷ 1000	8 bar	90 °C
1500 ÷ 5000	6 bar	

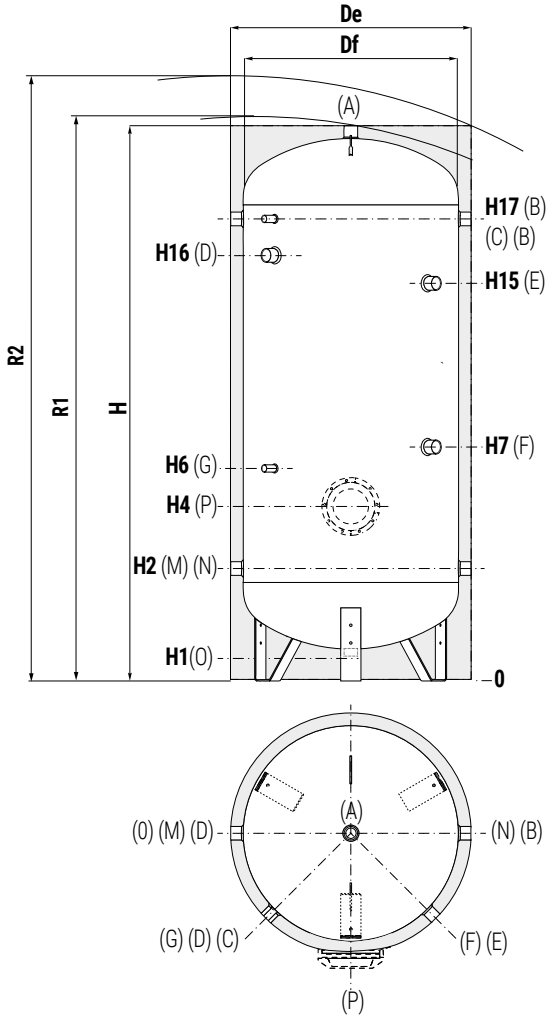

COMPLETE YOUR SYSTEM WITH THE NEW PRS MODULE *(FOR IMMEDIATE DHW PREPARATION)*



SEE HYDRONIC SECTION

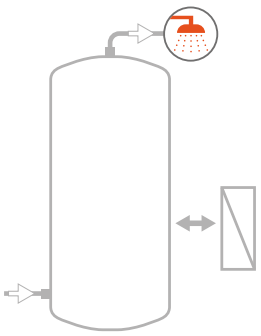

A	Domestic hot water outlet
B	Recirculation / Domestic hot water outlet
C	Connection for instrumentation G 1/2" F
D	Connection for electric immersion heater G 1"1/2 F for models > 800 connection G 2" F
E	Connection for 2nd magnesium anode G 1"1/4 F (only for models > 1500)
F	Connection for magnesium anode G 1" 1/4 F
G	Connection for instrumentation G 1/2" F
M	Domestic cold water circuit inlet
N	Alternative domestic cold water circuit inlet or connection for more tanks in series
O	Drain
P	Flange (only for models > 1000)

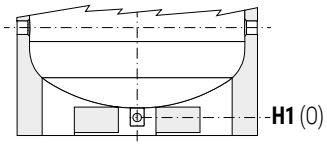

Models from 1500 to 5000 are equipped with a practical skirt support which facilitate the handling with transpallets and forklifts. Also, discharge piping already mounted to allow total emptying.

VASO INERZIALE WB - HARD FOAM INSULATION

Mod.	Volume	Weight	De	H	R2	H1	H2	H4	H6	H7	H15	H16	H17	P	A	B-M-N	O
	[lt]	[kg]	[mm]												Connections F		
200	192	41	550	1449	1560	85	325	//	520	650	//	1075	1185	//	1"1/4	1"1/4	1"1/4
300	293	52	650	1499	1640	85	350	//	545	735	//	1100	1210	//	1"1/4	1"1/4	1"1/4
500	501	69	750	1800	1960	85	375	//	570	760	//	1329	1485	//	1"1/4	1"1/4	1"1/4
800	792	111	900	2135	2330	85	405	//	600	870	//	1610	1765	//	1"1/4	1"1/4	1"1/4
1000	1041	150	1000	2221	2450	105	458	//	653	993	//	1664	1818	//	1"1/2	1"1/2	1"1/2
1500	1443	186	1100	2415	2660	109	440	525	635	1075	//	1895	2050	Øi170/Øe240	2"	1"1/2"	1"
2000	1975	223	1300	2492	2820	91	467	542	652	842	1952	1877	2057	Øi170/Øe240	2"	2"	1"

Net volume data according to EN 15332 available on product label.

VASO INERZIALE WC - DISMOUNTABLE SOFT FLEECE INSULATION

Mod.	Volume	Weight	De	Df	H	R1	R2	H1	H2	H4	H6	H7	H15	H16	H17	P	A	B-M-N	O
	[lt]	[kg]	[mm]														Connections F		
500	500	83	870	650	1891	1998	2090	101	416	//	611	801	//	1370	1526	//	1"1/4	1"1/4	1"1/4
800	792	111	970	750	2188	2220	2400	113	433	//	628	898	//	1638	1793	//	1"1/4	1"1/4	1"1/4
1000	1041	150	1070	850	2242	2270	2490	101	454	//	649	989	//	1660	1814	//	1"1/2	1"1/2	1"1/4
1500	1443	186	1210	950	2440	2495	2730	109	440	525	635	1075	//	1895	2050	Øi170/Øe240	2"	1"1/2"	1"
2000	1975	223	1360	1100	2492	2570	2850	91	467	542	652	842	1952	1877	2057	Øi170/Øe240	2"	2"	1"
2500	2311	267	1350	1250	2311	2480	2690	140	551	626	736	976	1816	1732	1891	Øi170/Øe240	2"	2"	1"
3000	2917	313	1350	1250	2811	2950	3130	140	551	626	736	876	2316	2232	2391	Øi170/Øe240	2"	2"	1"
4000	3765	435	1500	1400	2875	3050	3250	114	570	645	755	895	2315	2238	2410	Øi170/Øe240	2"	2"	1"
5000	4979	558	1700	1600	2915	3130	3380	94	580	655	765	935	2335	2265	2420	Øi170/Øe240	2"	2"	1"

Net volume data according to EN 15332 available on product label.

Products designed and manufactured for using within temperature and pressure limits in accordance to Art. 4.3 Directive 2014/68/EU (P.E.D.)

VASO **INERZIALE M1**

POLYWARM® COATED DOMESTIC HOT WATER ACCUMULATION TANK WITH M1-CLASS INSULATION



POLYWARM® COATED DHW STORAGE

APPLICATION
Domestic hot water storage.
MATERIAL
Mild steel Polywarm® coated (Attestation ACS - EN 16421)
INSULATION
M1-class polyester fibre insulation with high thermal performance (EN 13501), also applied to the manhole flange.
Grey PVC external lining.
CATHODE PROTECTION
Magnesium anode. Models > 1500 Nr. 2 magnesium anodes.

DRAIN
External confluence through drain connection. Models > 1000 external confluence through drain pipe.
GASKET- FLANGE PLATE
Silicone gaskets suitable for water intended for human consumption (tested according to 98/83/CE), max temperature up to 200°C. Mild steel inspection flange plate Polywarm® coated.
WARRANTY
5 years (See general sales conditions and warranty)
ACCESSORIES AND SPARE PARTS
See Accessories section for the entire list.

		Model	Art. Nr.	ErP ENERGY EFFICIENCY CLASS
 	**VASO INERZIALE WC M1** DISMOUNTABLE SOFT FLEECE INSULATION	**300**	3060161621333	**C**
		500	3060161621334	**C**
		800	3060161621335	**C**
		1000	3060161621336	**C**
		1500	3060161621337	**C**
		2000	3060161621338	**C**
		2500	3060161621339	
		3000	3060161621340	
		5000	3060161621341	
COMPACT MODELS  	**VASO INERZIALE WC M1** DISMOUNTABLE SOFT FLEECE INSULATION	**2500**	3060161621382	
		3000	3060161621383	
		4000	3060161621384	

ACCESSORIES

ELECTRIC IMMERSION HEATERS



Mod.	Heated volume by electric immersion heater [lt]	THREEPHASE **4** kW	**5** kW	**6** kW	**9** kW	**12** kW
		5240000000047	5240000000048	5240000000049	5240000000050	5240000000031
		Ignition time from 10 °C to 45 °C with electric immersion heaters [min]				
300	229	154	//	//	//	//
500	411	276	221	184	//	//
800	640	430	344	287	//	//
1000	718	482	386	322	214	161
1500	1031	693	554	462	308	231
2000	1345	903	723	602	402	301
2500	1652	1109	888	740	493	370
3000	2266	1522	1217	1014	676	507
4000	2810	1887	1510	1258	839	629
5000	3814	2561	2049	1708	1138	854

FULL CONTROL electronic unit (mounted on tank)

Art. Nr.	for models
5220280000004	WC
5220280000005	WB



HEAT MANAGER + electric immersion heater 1,5 kW + probe +3m cable

Art. Nr.	Output [kW]
5240000000074	1,5
5240000000075	2
5240000000076	3



Titanium anode

See Accessories section



Products designed and manufactured for using within temperature and pressure limits in accordance to Art. 4.3 Directive 2014/68/EU (P.E.D.)

VASO **INERZIALE M1**

POLYWARM® COATED DOMESTIC HOT WATER ACCUMULATION TANK WITH M1-CLASS INSULATION

STORAGE	
Pmax	Tmax
7 bar	90 °C

COMPLETE YOUR SYSTEM WITH THE NEW PRS MODULE *(FOR IMMEDIATE DHW PREPARATION)*

SEE HYDRONIC SECTION



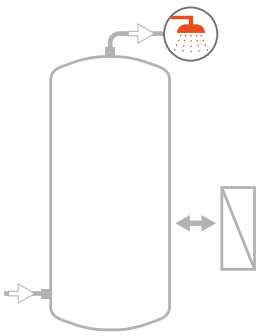

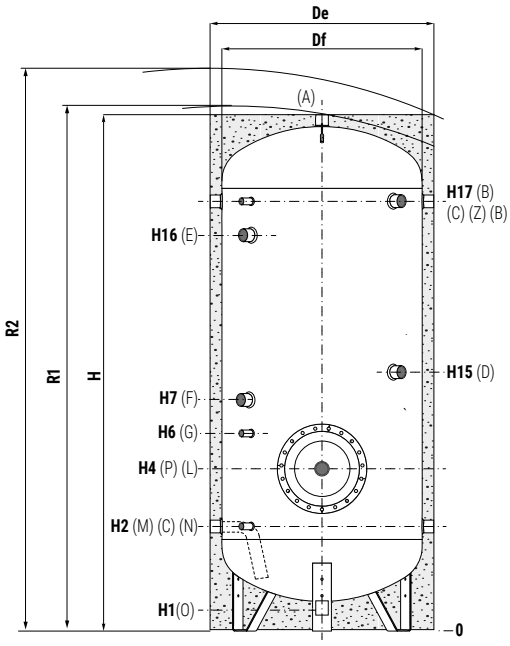

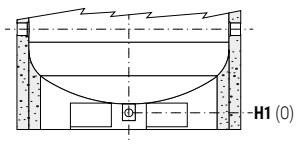

Models from 1500 to 5000 are equipped with a practical skirt support which facilitate the handling with transpallets and forklifts. Also, discharge piping already mounted to allow total emptying.

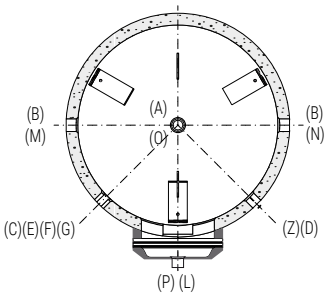

A	Domestic hot water outlet
B	Recirculation / Domestic hot water outlet
C-G	Connection for instrumentation G 1/2" F
D	Connection for electric immersion heater
E	Connection for 2nd magnesium anode G 1"1/4 F (only for models > 1500)
F	Connection for magnesium anode G 1" 1/4 F
L	Connection for instrumentation
M	Domestic cold water circuit inlet
N	Alternative domestic cold water circuit inlet or connection for more tanks in series
O	Drain
P	Flange
Z	Connection for electric immersion heater G 1" 1/2 F

	Model	Volume	Weight	Df	De	H	R1	R2	H1	H2	H4
		[lt]	[kg]	[mm]							
	300	289	91	550	770	1599	1615	1780	135	400	485
	500	501	120	650	870	1901	1920	2095	126	416	501
	800	789	177	750	970	2188	2205	2400	113	433	568
	1000	1007	217	850	1070	2188	2210	2440	101	454	739
	1500	1421	290	1000	1260	2228	2285	2565	107	458	743
	2000	2005	342	1250	1510	2111	2245	2600	140	551	826
	2500	2308	376	1250	1470	2361	2475	2790	140	551	826
	3000	2913	449	1250	1470	2861	2940	3225	140	551	826
	5000	4975	728	1600	1820	2965	3100	3485	94	580	855
Compact models	**2500**	2620	431	1400	1620	2175	2295	2720	114	570	845
	3000	3021	475	1500	1720	2190	2310	2790	109	575	850
	4000	3983	620	1600	1820	2465	2595	3070	94	580	855

	Model	H6	H7	H15	H16	H17	P	O	M-N-B	D	L	A
							[mm]	Connections F				
	300	595	735	835	//	1260	Øi220/Øe300	1"1/4	1"1/4	1"1/2	1"1/2	1"1/4
	500	611	881	981	//	1536	Øi220/Øe300	1"1/4	1"1/4	1"1/2	1"1/2	1"1/4
	800	718	1018	1118	//	1793	Øi300/Øe380	1"1/4	1"1/4	1"1/2	1"1/2	1"1/4
	1000	939	1139	1239	//	1760	Øi430/Øe512	1"1/2	1"1/2	2"1/2	2"1/2	1"1/2
	1500	943	1143	1243	//	1818	Øi430/Øe512	1"	1"1/2	2"1/2	2"1/2	2"
	2000	1026	1176	1286	1491	1641	Øi430/Øe512	1"	2"	2"1/2	2"1/2	2"
	2500	1026	1221	1321	1666	1891	Øi430/Øe512	1"	2"	2"1/2	2"1/2	2"
	3000	1026	1376	1476	2166	2391	Øi430/Øe512	1"	2"	2"1/2	2"1/2	2"
	5000	1055	1355	1475	2195	2420	Øi430/Øe512	1"	2"	2"1/2	2"1/2	2"
Compact models	**2500**	1045	1195	1295	1510	1660	Øi430/Øe512	1"	2"	2"1/2	2"1/2	2"
	3000	1050	1200	1300	1515	1665	Øi430/Øe512	1"	2"	2"1/2	2"1/2	2"
	4000	1055	1205	1325	1770	1920	Øi430/Øe512	1"	2"	2"1/2	2"1/2	2"

Net volume data according to EN 15332 available on product label.

Products designed and manufactured for using within temperature and pressure limits in accordance to Art. 4.3 Directive 2014/68/EU (P.E.D.)

VASO **INERZIALE A1 W**

POLYWARM® COATED DOMESTIC HOT WATER ACCUMULATION TANK WITH FIREPROOF INSULATION AND ALUMINIUM EXTERNAL COVER



APPLICATION
Domestic hot water storage.
MATERIAL
Mild steel Polywarm® coated (Attestation ACS - EN 16421)
INSULATION
Complete fireproof class A1 insulation in compliance with EN 13501, consisting of:
- Glass fiber/rock wool high thermal insulation.
- Aluminium cover hinged and removable.
The models 3000-4000-5000 are supplied with non-assembled insulation.
CATHODE PROTECTION
Magnesium anode. Models > 1500 Nr. 2 magnesium anodes.

DRAIN
External confluence through drain connection. Models > 1000 external confluence through drain pipe.
GASKET- FLANGE PLATE
Silicone gaskets suitable for water intended for human consumption (tested according to 98/83/CE), max temperature up to 200°C. Mild steel inspection flange plate Polywarm® coated.
WARRANTY
5 years (See general sales conditions and warranty)
ACCESSORIES AND SPARE PARTS
See Accessories section for the entire list.

POLYWARM® COATED DHW STORAGE

		Model	Art. Nr.	ErP ENERGY EFFICIENCY CLASS
	**VASO INERZIALE A1 W** NON-REMOVABLE METALLIC COVER	**300**	3060161621403	**C**
		500	3060161621174	**C**
		800	3060161621175	**C**
		1000	3060161621176	**C**
		1500	3060161621177	**C**
		2000	3060161621178	**C**
	**VASO INERZIALE A1 W** REMOVABLE METALLIC COVER	**2500**	3060161621409	
		3000	3060161621411	
		5000	3060161621414	
 **COMPACT MODELS**	**VASO INERZIALE A1 W** NON-REMOVABLE METALLIC COVER	**2500**	3060161621410	
		3000	3060161621412	
		4000	3060161621413	

ACCESSORIES

ELECTRIC IMMERSION HEATERS

Mod.	Heated volume by electric immersion heater [lt]	THREEPHASE **4** kW	**5** kW	**6** kW	**9** kW	**12** kW
		5240000000047	5240000000048	5240000000049	5240000000050	5240000000031
		Ignition time from 10 °C to 45 °C with electric immersion heaters [min]				
300	229	154	//	//	//	//
500	411	276	221	184	//	//
800	640	430	344	287	//	//
1000	718	482	386	322	214	161
1500	1031	693	554	462	308	231
2000	1345	903	723	602	402	301
2500	1652	1109	888	740	493	370
3000	2266	1522	1217	1014	676	507
4000	2810	1887	1510	1258	839	629
5000	3814	2561	2049	1708	1138	854

HEAT MANAGER + electric immersion heater 1,5 kW + probe +3m cable

Art. Nr.	Output [kW]
5240000000074	1,5
5240000000075	2
5240000000076	3



Titanium anode

See Accessories section



Products designed and manufactured for using within temperature and pressure limits in accordance to Art. 4.3 Directive 2014/68/EU (P.E.D.)

VASO **INERZIALE A1 W**

POLYWARM® COATED DOMESTIC HOT WATER ACCUMULATION TANK WITH FIREPROOF INSULATION AND ALUMINIUM EXTERNAL COVER

STORAGE	
Pmax	Tmax
7 bar	90 °C

COMPLETE YOUR SYSTEM WITH THE NEW PRS MODULE *(FOR IMMEDIATE DHW PREPARATION)*

SEE HYDRONIC SECTION



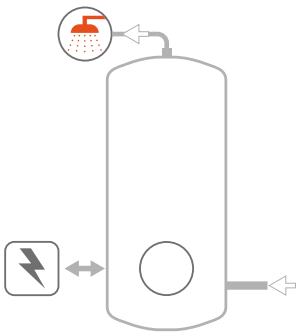

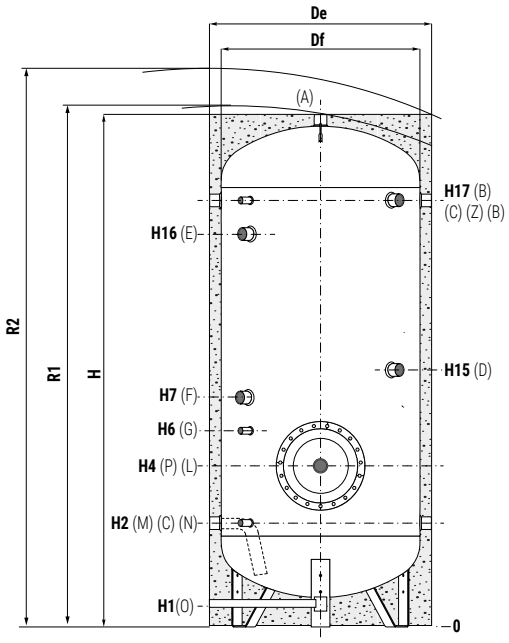

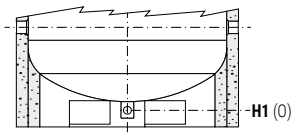

Models from 1500 to 5000 are equipped with a practical skirt support which facilitate the handling with transpallets and forklifts. Also, discharge piping already mounted to allow total emptying.

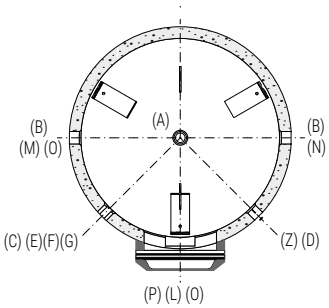

A	Domestic hot water outlet
B	Backflow external heat exchanger / Recirculation
C-G	Connection for instrumentation G 1/2" F
D-L	Connection for electric immersion heater
E	Connection for 2nd magnesium anode G 1" 1/4 F (Models >1500)
F	Connection for magnesium anode G 1" 1/4 F
M	Domestic cold water circuit inlet
N	Delivery to external heat exchanger
O	Drain
P	Flange for inspection
Z	Connection for electric immersion heater G 1" 1/2 F

	Model	Volume	Weight	Df	De	H	R1	R2	H1	H2	H4
		[lt]	[kg]	[mm]							
	300	289	52	//	750	1599	//	1770	135	400	485
	500	501	69	//	850	1901	//	2080	126	416	501
	800	789	111	//	950	2188	//	2390	113	433	568
	1000	1007	150	//	1050	2188	//	2430	101	454	739
	1500	1421	186	//	1200	2228	//	2530	107	458	743
	2000	2005	223	//	1450	2111	//	2560	140	551	826
	2500	2308	267	1250	1450	2361	2670	2770	140	551	826
	3000	2913	313	1250	1450	2861	3120	3210	140	551	826
	5000	4975	558	1600	1800	2965	3370	3470	94	580	855
Compact models	**2500**	2620	450	1400	1600	2175	2590	2700	114	570	845
	3000	3021	491	1500	1700	2190	2660	2770	109	575	850
	4000	3983	665	1600	1800	2465	2940	3050	94	580	855

	Model	H6	H7	H15	H16	H17	P	O	M-N-B	D	L	A
		[mm]						Connections F				
	300	595	735	835	//	1260	Øi220/Øe300	1"1/4	1"1/4	1"1/2	2"	1"1/4
	500	611	881	981	//	1536	Øi220/Øe300	1"1/4	1"1/4	1"1/2	2"	1"1/4
	800	718	1018	1118	//	1793	Øi300/Øe380	1"1/4	1"1/4	1"1/2	2"	1"1/4
	1000	939	1139	1239	//	1760	Øi430/Øe512	1"1/2	1"1/2	2"1/2	2"1/2	1"1/2
	1500	943	1143	1243	//	1818	Øi430/Øe512	1"	1"1/2	2"1/2	2"1/2	2"
	2000	1026	1176	1286	1491	1641	Øi430/Øe512	1"	2"	2"1/2	2"1/2	2"
	2500	1026	1221	1321	1666	1891	Øi430/Øe512	1"	2"	2"1/2	2"1/2	2"
	3000	1026	1376	1476	2166	2391	Øi430/Øe512	1"	2"	2"1/2	2"1/2	2"
	5000	1055	1355	1475	2195	2420	Øi430/Øe512	1"	2"	2"1/2	2"1/2	2"
Compact models	**2500**	1045	1195	1295	1510	1660	Øi430/Øe512	1"	2"	2"1/2	2"1/2	2"
	3000	1050	1200	1300	1515	1665	Øi430/Øe512	1"	2"	2"1/2	2"1/2	2"
	4000	1055	1205	1325	1770	1920	Øi430/Øe512	1"	2"	2"1/2	2"1/2	2"

Net volume data according to EN 15332 available on product label.

Products designed and manufactured for using within temperature and pressure limits in accordance to Art. 4.3 Directive 2014/68/EU (P.E.D.)

VASO **STORAGE 1**

POLYWARM® COATED DOMESTIC HOT WATER ACCUMULATION TANK WITH 1 BLIND FLANGE



APPLICATION
Domestic hot water storage.
MATERIAL
Mild steel Polywarm® coated (Attestation ACS - EN 16421)
INSULATION
HARD: High thermal insulation with ecological polyurethane hard foam.
SOFT (DISMOUNTABLE): NOFIRE® polyester fleece 100% made of recyclable material, with high thermal insulation. Fire resistance class B-s2d0 according to EN 13501.
Grey PVC external lining.
CATHODE PROTECTION
Magnesium anode. Models > 1500 Nr. 2 magnesium anodes.

DRAIN
External confluence through drain connection. Models > 1000 external confluence through drain pipe.
GASKET- FLANGE PLATE
Nr. 1 blind flange
Silicone gaskets suitable for water intended for human consumption (tested according to 98/83/CE), max temperature up to 200°C. Mild steel inspection flange plate Polywarm® coated.
WARRANTY
5 years (See general sales conditions and warranty)
ACCESSORIES AND SPARE PARTS
See Accessories section for the entire list.

POLYWARM® COATED DHW STORAGE

		Model	Art. Nr.	ErP ENERGY EFFICIENCY CLASS
	 **VASO STORAGE 1 WB** HARD FOAM INSULATION	**200**	3072162360540	**B**
		300	3072162360541	**C**
		500	3072162360542	**C**
		800	3072162360543	**B**
		1000	3072162360544	**C**
		1500	3072162360545	**C**
		2000	3072162360546	**B**
	 **VASO STORAGE 1 WC** DISMOUNTABLE SOFT FLEECE INSULATION	**500**	3072162360547	**C**
		800	3072162360548	**C**
		1000	3072162360549	**C**
		1500	3072162360550	**C**
		2000	3072162360551	**C**
		2500	3072162360552	
		3000	3072162360553	
		4000	3072162360554	
		5000	3072162360555	

ACCESSORIES

ELECTRIC IMMERSION HEATERS

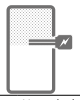

Mod.	Heated volume by electric immersion heater [lt]	MONOPHASE 1,5 kW	MONOPHASE 2 kW	MONOPHASE 3 kW	THREEPHASE 4 kW	THREEPHASE 5 kW	THREEPHASE 6 kW	THREEPHASE 9 kW	THREEPHASE 12 kW
		5240000000051	5240000000052	5240000000053	5240000000047	5240000000048	5240000000049	5240000000050	5240000000031
		Ignition time from 10 °C to 45 °C with electric immersion heaters [min]			Ignition time from 10 °C to 45 °C with electric immersion heaters [min]				
200	49	87	65	44	33	//	//	//	//
300	76	136	102	68	51	//	//	//	//
500	127	228	171	114	85	68	57	//	//
800	178	318	239	159	120	96	80	//	//
1000	243	436	327	218	163	131	109	73	54
1500	288	516	387	258	194	155	129	86	65
2000	443	793	595	396	297	238	198	132	99
2500	577	1033	775	517	387	310	258	172	129
3000	577	1033	775	517	387	310	258	172	129
4000	797	1428	1071	714	535	428	357	238	178
5000	1040	1864	1398	932	699	559	466	311	233

FULL CONTROL electronic unit (mounted on tank)

Art. Nr.	for models
5220280000004	WC
5220280000005	WB



HEAT MANAGER + electric immersion heater 1,5 kW + probe +3m cable

Art. Nr.	Output [kW]
5240000000074	1,5
5240000000075	2
5240000000076	3



Titanium anode

See Accessories section



Products designed and manufactured for using within temperature and pressure limits in accordance to Art. 4.3 Directive 2014/68/EU (P.E.D.)

VASO **STORAGE 1**

POLYWARM® COATED DOMESTIC HOT WATER ACCUMULATION TANK WITH 1 BLIND FLANGE

	STORAGE	
Model	Pmax	Tmax
200 ÷ 1000	8 bar	90 °C
1500 ÷ 5000	6 bar	

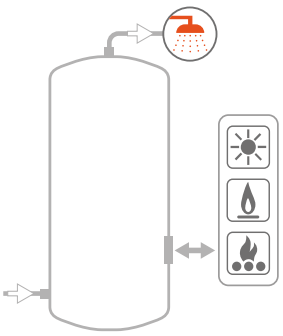

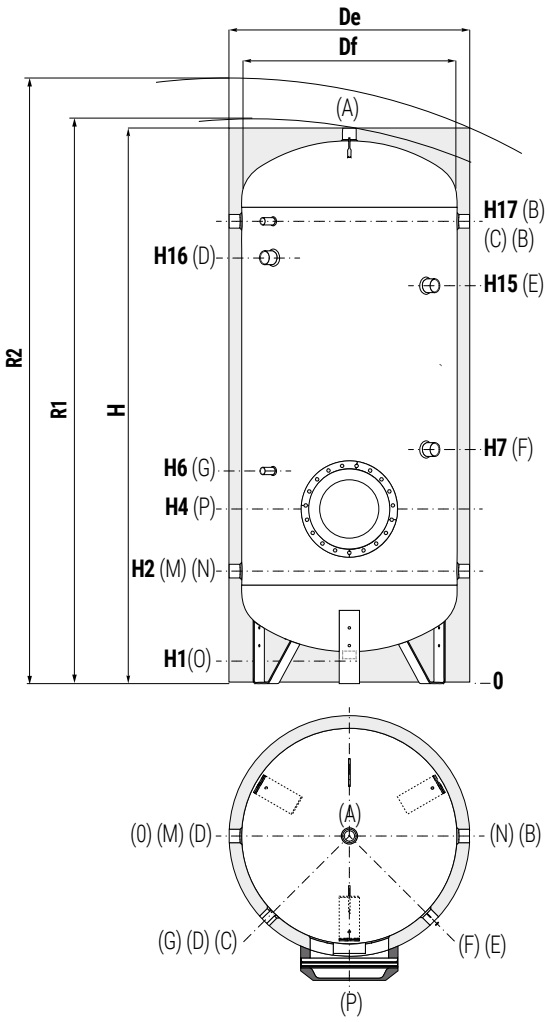

COMPLETE YOUR SYSTEM WITH THE NEW PRS MODULE *(FOR IMMEDIATE DHW PREPARATION)*



SEE HYDRONIC SECTION

A	Domestic hot water outlet
B	Recirculation / Domestic hot water outlet
C	Connection for instrumentation G 1/2" F
D	Connection for electric immersion heater G 1"1/2 F for models > 800 connection G 2" F
E	Connection for 2nd magnesium anode G 1"1/4 F (only for models > 1500)
F	Connection for magnesium anode G 1" 1/4 F
G	Connection for instrumentation G 1/2" F
M	Domestic cold water circuit inlet
N	Alternative domestic cold water circuit inlet or connection for more tanks in series
O	Drain
P	Flange

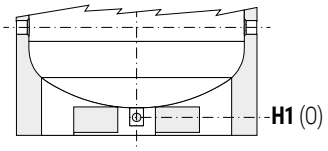

Models from 1500 to 5000 are equipped with a practical skirt support which facilitate the handling with transpallets and forklifts. Also, discharge piping already mounted to allow total emptying.

VASO STORAGE 1 WB - HARD FOAM INSULATION

Model	Volume	Weight	De	H	R2	H1	H2	H4	H6	H7	H15	H16	H17	P	B-M-N	A	O
	[lt]	[kg]	[mm]												Connections F		
200	191	51	550	1449	1560	85	325	410	520	650	//	1075	1185	Øi220/Øe300	1" 1/4	1" 1/4	1"1/4
300	292	64	650	1499	1640	85	350	435	545	735	//	1100	1210	Øi220/Øe300	1" 1/4	1" 1/4	1"1/4
500	500	89	750	1800	1960	85	375	460	570	760	//	1329	1485	Øi220/Øe300	1" 1/4	1" 1/4	1"1/4
800	794	149	900	2135	2330	85	405	540	690	870	//	1610	1765	Øi300/Øe380	1" 1/4	1" 1/2	1"1/4
1000	1042	170	1000	2221	2450	105	458	593	743	993	//	1664	1818	Øi300/Øe380	1" 1/2	2"	1"1/2
1500	1445	231	1100	2415	2660	109	440	675	825	1075	//	1895	2050	Øi300/Øe380	1" 1/2	2"	1"
2000	1978	367	1300	2492	2820	91	467	692	867	842	1952	1877	2057	Øi350/Øe430	2"	2"	1"

Net volume data according to EN 15332 available on product label.

VASO STORAGE 1 WC - DISMOUNTABLE SOFT FLEECE INSULATION

Model	Volume	Weight	De	DF	H	R1	R2	H1	H2	H4	H6	H7	H15	H16	H17	P	B-M-N	A	O
	[lt]	[kg]	[mm]														Connections F		
500	500	94	870	650	1891	1998	2090	101	416	501	611	801	//	1370	1526	Øi220/Øe300	1" 1/4	1" 1/2	1"1/4
800	794	147	970	750	2188	2220	2400	113	433	568	718	898	//	1638	1793	Øi300/Øe380	1" 1/4	1" 1/2	1"1/4
1000	1042	167	1070	850	2242	2270	2490	101	454	589	739	989	//	1660	1814	Øi300/Øe380	1" 1/2	2"	1"1/4
1500	1445	228	1210	950	2440	2495	2730	109	440	675	825	1075	//	1895	2050	Øi300/Øe380	1" 1/2	2"	1"1/4
2000	1978	352	1360	1100	2492	2570	2850	91	467	692	867	842	1952	1877	2057	Øi350/Øe430	2"	2"	1"1/2
2500	2315	366	1350	1250	2311	2480	2690	140	551	776	951	976	1816	1732	1891	Øi350/Øe430	2"	2"	1"
3000	2921	432	1350	1250	2811	2950	3130	140	551	836	1011	1036	2316	2232	2391	Øi350/Øe430	2"	2"	1"
4000	3769	555	1500	1400	2875	3050	3250	114	570	855	1030	1035	2315	2238	2410	Øi350/Øe430	2"	2"	1"
5000	4982	732	1700	1600	2915	3130	3380	94	580	855	1030	1035	2335	2265	2420	Øi350/Øe430	2"	2"	1"

Net volume data according to EN 15332 available on product label.

Products designed and manufactured for using within temperature and pressure limits in accordance to Art. 4.3 Directive 2014/68/EU (P.E.D.)

VASO **STORAGE 2**

POLYWARM® COATED DOMESTIC HOT WATER ACCUMULATION TANK WITH 2 BLIND FLANGES



APPLICATION
Domestic hot water storage.
MATERIAL
Mild steel Polywarm® coated (Attestation ACS - EN 16421)
INSULATION
HARD: High thermal insulation with ecological polyurethane hard foam.
SOFT (DISMOUNTABLE): NOFIRE® polyester fleece 100% made of recyclable material, with high thermal insulation. Fire resistance class B-s2d0 according to EN 13501.
Grey PVC external lining.
CATHODE PROTECTION
Magnesium anode. Models > 1500 Nr. 2 magnesium anodes.

DRAIN
External confluence through drain connection. Models > 1000 external confluence through drain pipe.
GASKET- FLANGE PLATE
Nr. 2 blind flanges.
Silicone gaskets suitable for water intended for human consumption (tested according to 98/83/CE), max temperature up to 200°C. Mild steel inspection flange plate Polywarm® coated.
WARRANTY
5 years (See general sales conditions and warranty)
ACCESSORIES AND SPARE PARTS
See Accessories section for the entire list.

POLYWARM® COATED DHW STORAGE

		Model	Art. Nr.	ErP ENERGY EFFICIENCY CLASS
	 **VASO STORAGE 2 WB** HARD FOAM INSULATION	**200**	3084162360010	**B**
		300	3084162360011	**C**
		500	3084162360012	**C**
		800	3084162360013	**B**
		1000	3084162360014	**C**
		1500	3084162360015	**C**
		2000	3084162360016	**B**
	 **VASO STORAGE 2 WC** DISMOUNTABLE SOFT FLEECE INSULATION	**500**	3082162360140	**C**
		800	3082162360141	**C**
		1000	3082162360142	**C**
		1500	3082162360143	**C**
		2000	3082162360144	**C**
		2500	3082162360145	
		3000	3082162360146	
		4000	3082162360147	
		5000	3082162360148	

ACCESSORIES

ELECTRIC IMMERSION HEATERS

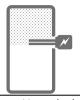

Mod.	Heated volume by electric immersion heater [lt]	MONOPHASE 1,5 kW	MONOPHASE 2 kW	MONOPHASE 3 kW	THREEPHASE 4 kW	THREEPHASE 5 kW	THREEPHASE 6 kW	THREEPHASE 9 kW	THREEPHASE 12 kW
		5240000000051	5240000000052	5240000000053	5240000000047	5240000000048	5240000000049	5240000000050	5240000000031
		Ignition time from 10 °C to 45 °C with electric immersion heaters [min]			Ignition time from 10 °C to 45 °C with electric immersion heaters [min]				
200	49	87	65	44	33	//	//	//	//
300	76	136	102	68	51	//	//	//	//
500	127	228	171	114	85	68	57	//	//
800	178	318	239	159	120	96	80	//	//
1000	243	436	327	218	163	131	109	73	54
1500	288	516	387	258	194	155	129	86	65
2000	443	793	595	396	297	238	198	132	99
2500	577	1033	775	517	387	310	258	172	129
3000	577	1033	775	517	387	310	258	172	129
4000	797	1428	1071	714	535	428	357	238	178
5000	1040	1864	1398	932	699	559	466	311	233

FULL CONTROL electronic unit (mounted on tank)

Art. Nr.	for models
5220280000004	WC
5220280000005	WB



HEAT MANAGER + electric immersion heater 1,5 kW + probe +3m cable

Art. Nr.	Output [kW]
5240000000074	1,5
5240000000075	2
5240000000076	3



Titanium anode

See Accessories section



Products designed and manufactured for using within temperature and pressure limits in accordance to Art. 4.3 Directive 2014/68/EU (P.E.D.)

VASO **STORAGE 2**

POLYWARM® COATED DOMESTIC HOT WATER ACCUMULATION TANK WITH 2 BLIND FLANGES

	STORAGE	
Model	Pmax	Tmax
200 ÷ 1000	8 bar	90 °C
1500 ÷ 5000	6 bar	

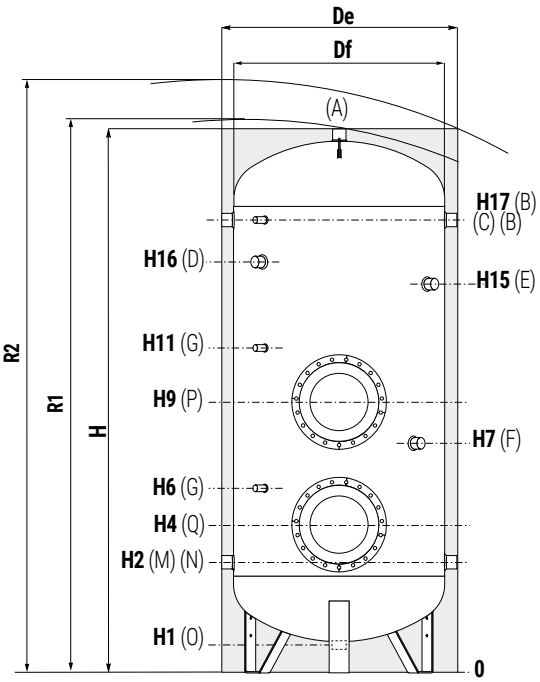

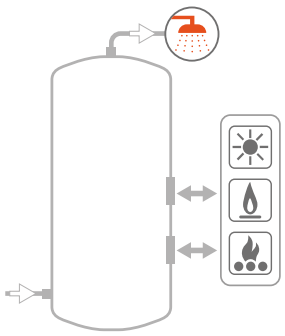

COMPLETE YOUR SYSTEM WITH THE NEW PRS MODULE *(FOR IMMEDIATE DHW PREPARATION)*



SEE HYDRONIC SECTION

A	Domestic hot water outlet
B	Recirculation / Domestic hot water outlet
C	Connection for instrumentation G 1/2" F
D	Connection for electric immersion heater G 1"1/2 F for models > 800 connection G 2" F
E	Connection for 2nd magnesium anode G 1"1/4 F (only for models > 1500)
F	Connection for magnesium anode G 1" 1/4 F
G	Connection for instrumentation G 1/2" F
M	Domestic cold water circuit inlet
N	Alternative domestic cold water circuit inlet or connection for more tanks in series
O	Drain
P-Q	Flange

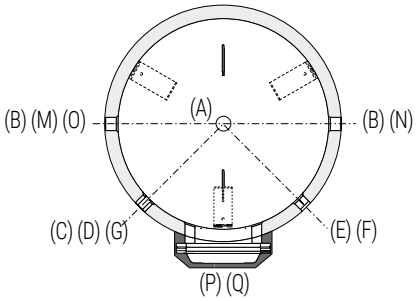

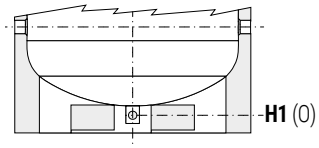

Models from 1500 to 5000 are equipped with a practical skirt support which facilitate the handling with transpallets and forklifts. Also, discharge piping already mounted to allow total emptying.

VASO STORAGE 2 WB - HARD FOAM INSULATION

Model	Volume	Weight	De	H	R2	H1	H2	H4	H6	H7	H9	H11	H15	H16	H17	P-Q	B-M-N	A	O
	[lt]	[kg]	[mm]														Connections F		
200	193	54	550	1449	1560	85	325	410	520	650	860	970	//	1075	1185	Øi220/Øe300	1"1/4	1"1/4	1"1/4
300	295	68	650	1499	1640	85	350	435	545	735	885	995	//	1100	1210	Øi220/Øe300	1"1/4	1"1/4	1"1/4
500	503	95	750	1800	1960	85	375	460	570	760	910	1020	//	1329	1485	Øi220/Øe300	1"1/4	1"1/4	1"1/4
800	799	154	900	2135	2330	85	405	540	690	870	1090	1240	//	1610	1765	Øi300/Øe380	1"1/4	1"1/4	1"1/4
1000	1047	176	1000	2221	2450	105	458	593	743	993	1143	1293	//	1664	1818	Øi300/Øe380	1"1/2	1"1/2	1"1/2
1500	1450	236	1100	2415	2660	109	440	675	825	1075	1250	1400	//	1895	2050	Øi300/Øe380	1"1/2	2"	1"
2000	1985	374	1300	2492	2820	91	467	692	867	842	1262	1437	1952	1877	2057	Øi350/Øe430	2"	2"	1"

Net volume data according to EN 15332 available on product label.

VASO STORAGE 2 WC - DISMOUNTABLE SOFT FLEECE INSULATION

Model	Volume	Weight	De	DF	H	R1	R2	H1	H2	H4	H6	H7	H9	H11	H15	H16	H17	P-Q	B-M-N	A	O
	[lt]	[kg]	[mm]																Connections F		
500	500	100	870	650	1891	1998	2090	101	416	501	611	801	951	1061	//	1370	1526	Øi220/Øe300	1" 1/4	1" 1/4	1"1/4
800	798	153	970	750	2188	2220	2400	113	433	568	718	898	1118	1268	//	1638	1793	Øi300/Øe380	1" 1/4	1" 1/4	1"1/4
1000	1047	173	1070	850	2242	2270	2490	101	454	589	739	989	1139	1289	//	1660	1814	Øi300/Øe380	1" 1/2	1" 1/2	1"1/4
1500	1450	234	1210	950	2440	2495	2730	109	440	675	825	1075	1250	1400	//	1895	2050	Øi300/Øe380	1" 1/2	2"	1"1/4
2000	1985	359	1360	1100	2492	2570	2850	91	467	692	867	842	1262	1437	1952	1877	2057	Øi350/Øe430	2"	2"	1"1/2
2500	2322	373	1350	1250	2311	2480	2690	140	551	776	951	976	1376	1551	1816	1732	1891	Øi350/Øe430	2"	2"	1"
3000	2928	439	1350	1250	2811	2950	3130	140	551	836	1011	1036	1476	1651	2316	2232	2391	Øi350/Øe430	2"	2"	1"
4000	3776	561	1500	1400	2875	3050	3250	114	570	855	1030	1035	1495	1670	2315	2238	2410	Øi350/Øe430	2"	2"	1"
5000	4990	739	1700	1600	2915	3130	3380	94	580	855	1030	1035	1505	1680	2335	2265	2420	Øi350/Øe430	2"	2"	1"

Net volume data according to EN 15332 available on product label.

Products designed and manufactured for using within temperature and pressure limits in accordance to Art. 4.3 Directive 2014/68/EU (P.E.D.)

VASO **STORAGE 3**

POLYWARM® COATED DOMESTIC HOT WATER ACCUMULATION TANK WITH 3 BLIND FLANGES



POLYWARM® COATED DHW STORAGE

APPLICATION
Domestic hot water storage.
MATERIAL
Mild steel Polywarm® coated (Attestation ACS - EN 16421)
INSULATION
SOFT (DISMOUNTABLE): NOFIRE® polyester fleece 100% made of recyclable material, with high thermal insulation. Fire resistance class B-s2d0 according to EN 13501.
Grey PVC external lining.
CATHODE PROTECTION
Magnesium anode. Models > 1500 Nr. 2 magnesium anodes.
DRAIN
External confluence through drain connection. Models > 1000 external confluence through drain pipe.
GASKET- FLANGE PLATE
Nr. 3 blind flanges.
Silicone gaskets suitable for water intended for human consumption (tested according to 98/83/CE), max temperature up to 200°C. Mild steel inspection flange plate Polywarm® coated.
WARRANTY
5 years (See general sales conditions and warranty)
ACCESSORIES AND SPARE PARTS
See Accessories section for the entire list.





VASO STORAGE 3 WC
DISMOUNTABLE SOFT FLEECE INSULATION

Model	Art. Nr.	ErP ENERGY EFFICIENCY CLASS
500	3092162360140	**C**
1000	3092162360141	**C**
1500	3092162360142	**C**
2000	3092162360143	**C**
3000	3092162360144	
5000	3092162360145	

Products designed and manufactured for using within temperature and pressure limits in accordance to Art. 4.3 Directive 2014/68/EU (P.E.D.)

ACCESSORIES

FULL CONTROL electronic unit (mounted on tank)

Art. Nr.	for models
5220280000004	WC



HEAT MANAGER + electric immersion heater 1,5 kW + probe +3m cable

Art. Nr.	Output [kW]
5240000000074	1,5
5240000000075	2
5240000000076	3



Titanium anode

See Accessories section



VASO **STORAGE 3**

POLYWARM® COATED DOMESTIC HOT WATER ACCUMULATION TANK WITH 3 BLIND FLANGES

	STORAGE	
Model	Pmax	Tmax
500 ÷ 1000	8 bar	90 °C
1500 ÷ 5000	6 bar	

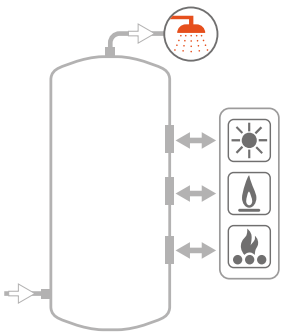

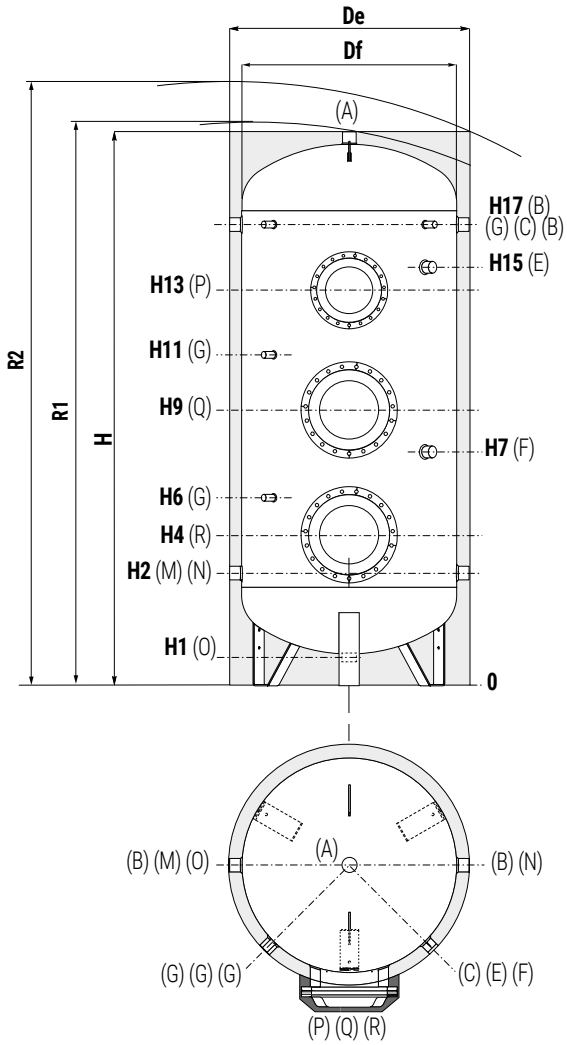

COMPLETE YOUR SYSTEM WITH THE NEW PRS MODULE *(FOR IMMEDIATE DHW PREPARATION)*



SEE HYDRONIC SECTION

A	Domestic hot water outlet G 2" F
B	Recirculation / Domestic hot water outlet G 1" 1/2 F . for models > 1500 G 2" F
C	Connection for instrumentation G 1/2" F
E	Connection for 2nd magnesium anode G 1"1/4 F (only for models > 1500)
F	Connection for magnesium anode G 1" 1/4 F
G	Connection for instrumentation G 1/2" F
M	Domestic cold water circuit inlet G 1" 1/2 F . for models > 1500 G 2" F
N	Alternative domestic cold water circuit inlet or connection for more tanks in series G 1" 1/2 F . For models > 1500 G 2" F
O	Drain
P-Q-R	Flange

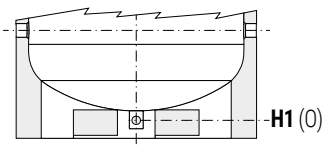

Models from 1500 to 5000 are equipped with a practical skirt support which facilitate the handling with transpallets and forklifts. Also, discharge piping already mounted to allow total emptying.

Model	Volume	Weight	De	Df	H	R1	R2	H1	H2	H4	H6	H7
	[lt]	[kg]	[mm]									
500	506	105	870	650	1891	1990	2090	126	416	501	611	801
1000	1052	178	1070	850	2198	2240	3140	89	454	562	649	989
1500	1455	239	1210	950	2440	2495	2730	109	440	675	825	1075
2000	1991	366	1360	1100	2492	2570	2850	91	467	692	867	842
3000	2933	446	1350	1250	2811	2950	3130	140	551	836	1011	1036
5000	4996	746	1700	1600	2915	3130	3380	94	580	855	1030	1035

Model	H9	H11	H13	H15	H17	Q-R	P	O
	[mm]							
500	951	1061	1401	//	1526	Øi220/Øe300	Øi220/Øe300	1"1/4
1000	1112	1249	1612	//	1760	Øi300/Øe380	Øi300/Øe380	1"1/2
1500	1250	1400	1875	//	2050	Øi300/Øe380	Øi300/Øe380	1"
2000	1262	1437	1817	1592	2057	Øi350/Øe430	Øi300/Øe380	1"
3000	1476	1651	2176	1926	2391	Øi350/Øe430	Øi300/Øe380	1"
5000	1505	1680	2115	1855	2420	Øi350/Øe430	Øi350/Øe430	1"

Net volume data according to EN 15332 available on product label.

Products designed and manufactured for using within temperature and pressure limits in accordance to Art. 4.3 Directive 2014/68/EU (P.E.D.)

VASO **STORAGE COMPACT**

POLYWARM® COATED DOMESTIC HOT WATER ACCUMULATION TANK SUITABLE FOR LOW-CEILINGED ROOMS WITH 1 BLIND FLANGE



APPLICATION
Domestic hot water storage.
Suitable for low-ceilinged rooms.
MATERIAL
Mild steel Polywarm® coated (Attestation ACS - EN 16421)
INSULATION (DISMOUNTABLE)
NOFIRE® polyester fleece 100% made of recyclable material, with high thermal insulation. Fire resistance class B-s2d0 according to EN 13501.
Grey PVC external lining.
CATHODE PROTECTION
Nr. 2 magnesium anodes.

DRAIN
External confluence through drain connection.
GASKET- FLANGE PLATE
Nr. 1 blind flange.
Silicone gaskets suitable for water intended for human consumption (tested according to 98/83/CE), max temperature up to 200°C. Mild steel inspection flange plate Polywarm® coated.
WARRANTY
5 years (See general sales conditions and warranty)
ACCESSORIES AND SPARE PARTS
See Accessories section for the entire list.

POLYWARM® COATED DHW STORAGE

			Model	Art. Nr.	ErP ENERGY EFFICIENCY CLASS
		**VASO STORAGE COMPACT WC** DISMOUNTABLE SOFT FLEECE INSULATION	**1500**	3072162360556	**C**
			2000	3072162360557	**C**
			2500	3072162360558	
			3000	3072162360559	
			4000	3072162360560	

ACCESSORIES

ELECTRIC IMMERSION HEATERS



Mod.	Heated volume by electric immersion heater [lt]	MONOPHASE **1,5** kW	**2** kW	**3** kW	THREEPHASE **4** kW	**5** kW	**6** kW	**9** kW	**12** kW
		5240000000051	5240000000052	5240000000053	5240000000047	5240000000048	5240000000049	5240000000050	5240000000031
		Ignition time from 10 °C to 45 °C with electric immersion heaters [min]			Ignition time from 10 °C to 45 °C with electric immersion heaters [min]				
1500	443	793	595	396	297	238	198	132	99
2000	577	1033	775	517	387	310	258	172	129
2500	797	1428	1071	714	535	428	357	238	178
3000	874	1565	1173	782	587	469	391	261	196
4000	924	1655	1241	828	621	497	414	276	207

FULL CONTROL electronic unit (mounted on tank)

Art. Nr.	for models	
5220280000004	WC	

Thermometer

Art. Nr.	
5032240000107	
5 units box	

Titanium anode

Art. Nr.	Model	
5200000000011	1500	
5200000000013	2000÷4000	

Products designed and manufactured for using within temperature and pressure limits in accordance to Art. 4.3 Directive 2014/68/EU (P.E.D.)

VASO **STORAGE COMPACT**

POLYWARM® COATED DOMESTIC HOT WATER ACCUMULATION TANK SUITABLE FOR LOW-CEILINGED ROOMS WITH 1 BLIND FLANGE

STORAGE	
Pmax	Tmax
6 bar	90 °C

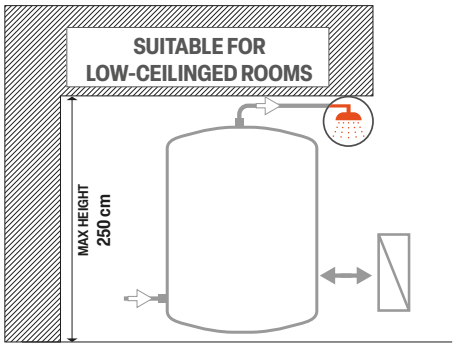

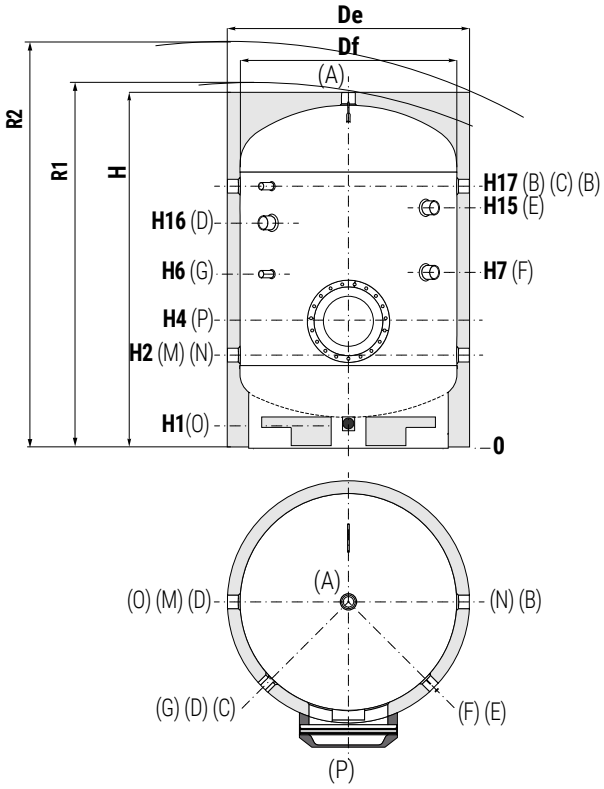

A	Domestic hot water outlet G 2" F
B	Recirculation / Domestic hot water outlet G 2" F
C	Connection for instrumentation G 1/2" F
D	Connection for electric immersion heater G 1"1/2 F for models > 800 connection G 2" F
E	Connection for 2nd magnesium anode G 1"1/4 F
F	Connection for magnesium anode G 1" 1/4 F
G	Connection for instrumentation G 1/2" F
M	Domestic cold water circuit inlet G 2" F
N	Alternative domestic cold water circuit inlet or connection for more tanks in series G 2" F
O	Drain G 1" F
P	Flange

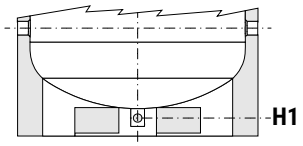

All models are equipped with a practical skirt support which facilitate the handling with transpallets and forklifts. Also, discharge piping already mounted to allow total emptying.

Model	Volume	Weight	De	Df	H	R1	R2	H1
	[lt]	[kg]	[mm]					
1500	1509	286	1360	1100	1992	2104	2420	91
2000	2012	351	1510	1250	2111	2251	2610	140
2500	2627	443	1500	1400	2125	2363	2610	114
3000	3029	479	1600	1500	2140	2410	2680	109
4000	3990	627	1700	1600	2415	2678	2960	94

Model	H2	H4	H6	H7	H15	H16	H17	P
	[mm]							
1500	467	692	867	942	//	1377	1557	Øi300/Øe380
2000	551	776	951	976	1566	1482	1641	Øi350/Øe430
2500	570	795	970	975	1585	1488	1660	Øi350/Øe430
3000	575	800	975	980	1600	1520	1675	Øi350/Øe430
4000	580	835	1010	1015	1855	1765	1920	Øi350/Øe430

Net volume data according to EN 15332 available on product label.

Products designed and manufactured for using within temperature and pressure limits in accordance to Art. 4.3 Directive 2014/68/EU (P.E.D.)

INTEGRATIVE COMPONENTS FOR VASO STORAGE

COMPATIBILITY TABLES VASO STORAGE/HEAT EXCHANGERS

ANTILEGIONELLA® HEAT EXCHANGER KIT *(EXCHANGER HEAD INCLUDED)*

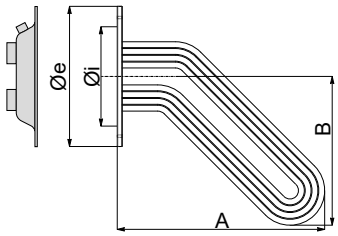

Antilegionella® heat exchanger kit + gaskets + bolts and insulated bushes.

Antilegionella® 316L staninless steel curved heat exchanger kit + gaskets + bolts and insulated bushes.
MAX WORKING PRESSURE: 12 BAR
MAX WORKING TEMPERATURE: 110 °C

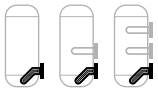

ANTILEGIONELLA® HEAT EXCHANGER

Heat exchanger surface	Øi / Øe flange	A	B	Art. Nr.	Storage 1-2		Storage 1-2-3	Storage 1-2	Storage 1-2-3	Storage 1-2-3	Storage 1-2-3	Storage 1-2-3	Storage 1-2	Storage 1-2-3	Storage 1-2	Storage 1-2-3
					Storage COMPACT											
					Model											
[m²]	[mm]				200	300	500	800	1000	1500	2000	2500	3000	4000	5000	
0,5	Ø220/Øe300	350	240	5221000010142	✓	✓	✓									
0,75	Øi220/Øe300	350	240	5221000010143	✓	✓	✓									
1	Øi220/Øe300	371	261	5221000010144			✓									
1,5	Øi220/Øe300	561	311	5221000010145			✓									
1,5	Øi300/Øe380	496	336	5221000010146				✓	✓	✓						
2	Øi300/Øe380	496	336	5221000010147				✓	✓	✓						
3	Øi300/Øe380	607	452	5221000010148					✓	✓						
4	Øi350/Øe430	636	457	5221000010149							✓	✓	✓	✓	✓	
5	Øi350/Øe430	678	498	5221000010150							✓	✓	✓	✓	✓	
6	Øi350/Øe430	828	585	5221000010151									✓	✓	✓	
8	Øi350/Øe430	1250	598	5221000010152										✓	✓	
10	Øi350/Øe430	1550	538	5221000010153											✓	

STRAIGHT HEAT EXCHANGER KIT *(EXCHANGER HEAD INCLUDED)*

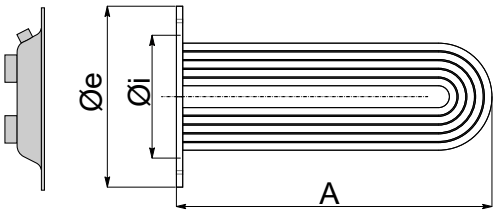

Straight heat exchanger kit + gaskets + bolts and insulated bushes.

Straight 316L staninless steel heat exchanger kit + gaskets + bolts and insulated bushes.
MAX WORKING PRESSURE: 12 BAR
MAX WORKING TEMPERATURE: 110 °C



MIDDLE HEAT EXCHANGER

UPPER HEAT EXCHANGER

Heat exchanger surface	Øi / Øe flange	A	Art. Nr.	Storage 2-3											Storage 2-3					
				Model											Model					
[m²]		[mm]		200	300	500	800	1000	1500	2000	2500	3000	4000	5000	500	1000	1500	2000	3000	5000
0,5	Øi220/Øe300	445	5221000010154	✓	✓	✓									✓					
0,75	Øi220/Øe300	445	5221000010155	✓	✓	✓									✓					
1	Øi220/Øe300	475	5221000010156	✓	✓	✓									✓					
1,5	Øi220/Øe300	690	5221000010157			✓									✓					
1,5	Øi300/Øe380	600	5221000010158				✓	✓	✓							✓	✓	✓	✓	
2	Øi300/Øe380	560	5221000010159				✓	✓	✓							✓	✓	✓	✓	
3	Øi300/Øe380	720	5221000010160				✓	✓	✓							✓	✓	✓	✓	
4	Øi350/Øe430	750	5221000010161							✓	✓	✓	✓	✓						✓
5	Øi350/Øe430	780	5221000010162							✓	✓	✓	✓	✓						✓
6	Øi350/Øe430	890	5221000010163							✓	✓	✓	✓	✓						✓
8	Øi350/Øe430	1250	5221000010164								✓	✓	✓	✓						✓
10	Øi350/Øe430	1510	5221000010165											✓						✓

INTEGRATIVE COMPONENTS FOR VASO STORAGE

COMPATIBILITY TABLES VASO STORAGE/HEAT EXCHANGERS

FINNED HEAT EXCHANGER KIT

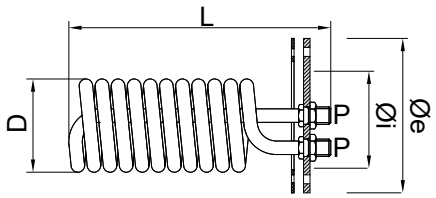

Copper finned and tinned heat exchangers+ flange plate + gaskets + bolts and insulated bushes.
MAX WORKING PRESSURE: 12 BAR
MAX WORKING TEMPERATURE: 110 °C

Finned heat exchanger kit + flange plate + gaskets + bolts and insulated bushes.

MIDDLE AND **LOWER** HEAT EXCHANGER — **UPPER** HEAT EXCHANGER

Heat exchanger surface	Øi / Øe flange	D	L	P	Capacity	Art. Nr.	Storage 1/ 1 COMPACT / 2 / EXTRA PLUS 1-2-3										Storage 3 / EXTRA PLUS 3					
							Model										Model					
[m²]	[mm]				[lt]		200	300	500	800	1000	1500	2000	2500	3000	4000	5000	500	1000	1500	2000	3000	5000
0,76	Øi220/Øe300	142	400	1"	0,6	5221000061003	✓	✓	✓									✓					
0,94	Øi220/Øe300	142	410	1"	0,54	5221000061002	✓	✓	✓									✓					
1,58	Øi220/Øe300	170	440	1"	1,21	5221000061004	✓	✓	✓									✓					
0,94	Øi300/Øe380	142	410	1"	0,54	5221000061011				✓	✓	✓							✓	✓	✓	✓	
1,58	Øi300/Øe380	170	440	1"	1,21	5221000061012				✓	✓	✓							✓	✓	✓	✓	
2,63	Øi300/Øe380	190	570	1"	2,07	5221000061006				✓	✓	✓							✓	✓	✓	✓	
3,17	Øi300/Øe380	190	665	1"	2,51	5221000061007				✓	✓	✓							✓	✓	✓	✓	
4,54	Øi300/Øe380	190	750	1"1/4	3,6	5221000061008				✓	✓	✓							✓	✓	✓	✓	
3,17	Øi350/Øe430	190	665	1"	2,51	5221000061013							✓	✓	✓	✓	✓						✓
4,54	Øi350/Øe430	190	750	1"1/4	3,6	5221000061014							✓	✓	✓	✓	✓						✓
5,26	Øi350/Øe430	190	850	1"1/4	4,14	5221000061009							✓	✓	✓	✓	✓						✓
6,34	Øi350/Øe430	190	980	1"1/4	5,1	5221000061010							✓	✓	✓	✓	✓						✓

FLANGE PLATE FOR D.H.W. STORAGE TANKS POLYWARM® *(POLYWARM®)*



Art. Nr.	Connection	Ø outer [mm]
7206211500013	1"1/2	300
7206211500014	1"1/2	380
7206000910013	1"1/2	430
7206211500011	2"	380
7206000910009	2"	430

Includes 1 gasket and bolts.
1 connection for electric immersion heater (available on storage tanks).

EXAMPLE OF INSTALLATION WITH **VASO INERZIALE A1**

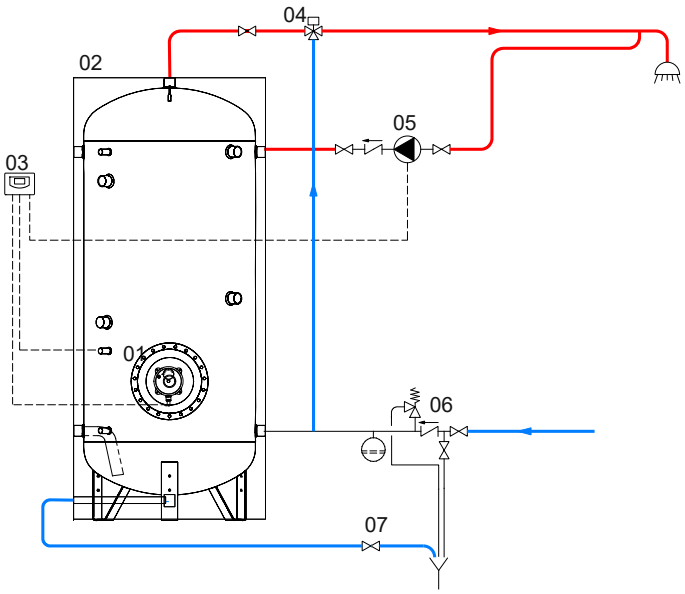

01	Electric immersion heater ad immersione	03	FULL CONTROL electronic unit / thermostat	05	D.H.W. circulation group	07	Blowdown valve
02	VASO INERZIALE	04	Thermostatic mixing valve	06	Hydraulic safety group		

EXAMPLE OF INSTALLATION WITH **PRS MODULE -** FOR DHW ACCUMULATION

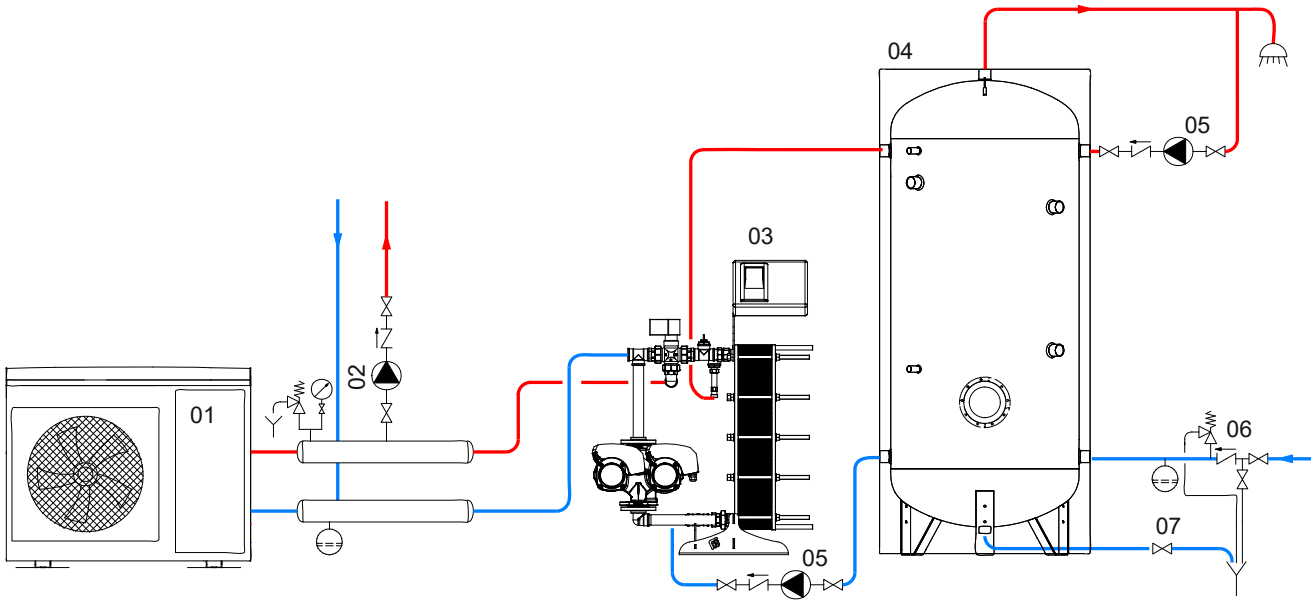

01	Generator	04	VASO INERZIALE	07	Blowdown valve
02	Heating system circulation group	05	D.H.W. recirculation group		
03	PRS MODULE	06	Hydraulic safety group		

The following schemes are purely illustrative. To realize the installation, always refer to a qualified technician.

EXAMPLE OF INSTALLATION WITH **VASO STORAGE COMPACT**

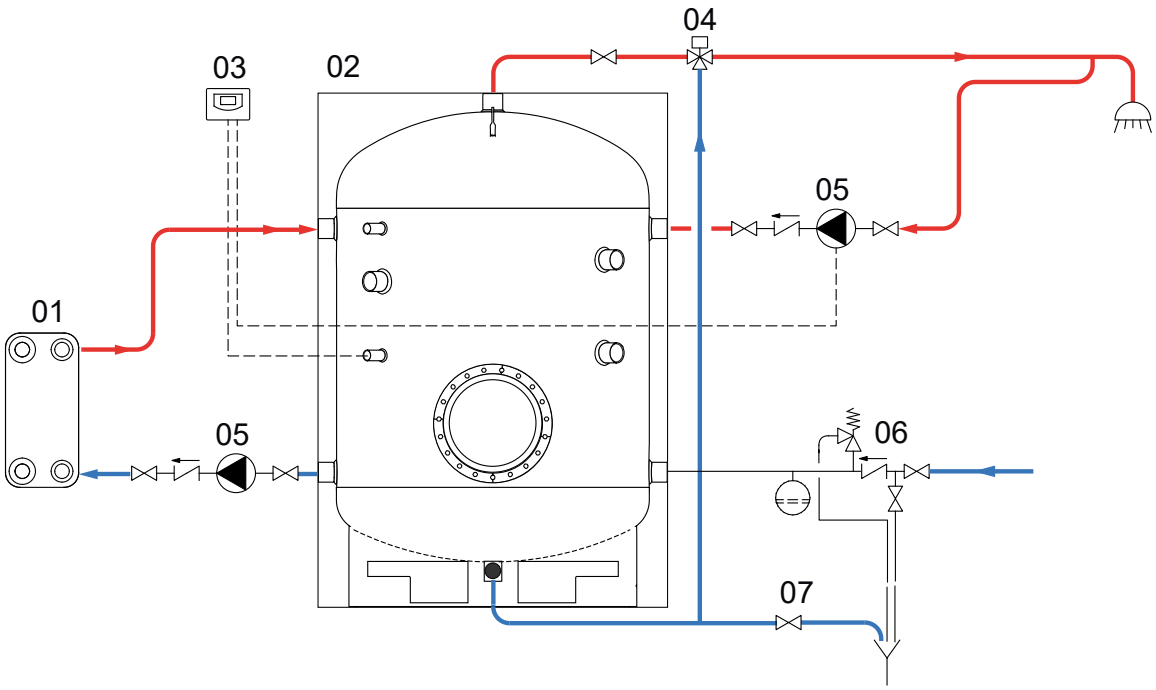

01	Generator / Plate heat exchanger	03	FULL CONTROL electronic unit / thermostat	05	D.H.W. circulation group	07	Blowdown valve
02	VASO STORAGE COMPACT	04	Thermostatic mixing valve	06	Hydraulic safety group		

EXAMPLE OF INSTALLATION WITH **EXTRA HORIZONTAL**

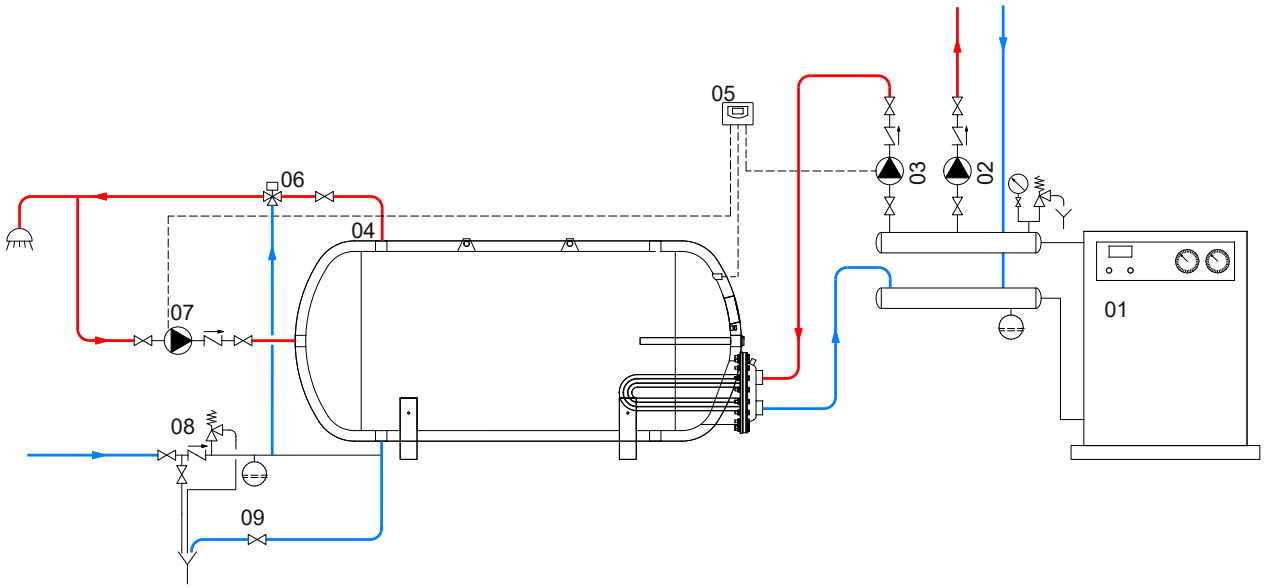

01	Generator	04	EXTRA HORIZONTAL	07	D.H.W. recirculation group
02	Heating system circulation group	05	FULL CONTROL electronic unit / thermostat	08	Hydraulic safety group
03	D.H.W. circulation group	06	Thermostatic mixing valve	09	Blowdown valve

The following schemes are purely illustrative. To realize the installation, always refer to a qualified technician.

STAINLESS STEEL CALORIFIERS RANGE

D.H.W. production







NEW

Model	EXTRA INOX	EXTRA INOX COMPACT	EXTRA INOX STEAM	VASO INERZIALE INOX	VASO INERZIALE INOX M1
Page nr.	192	196	210	212	214
Application					
Heat exchangers	- Stainless steel 316L extractable heat exchangers	- Stainless steel 316L extractable heat exchangers	- Stainless steel 316L extractable heat exchangers	-	(with inspection flange and provision for heat exchangers)
Number of heat exchangers					
Energy source					
Energy efficiency class	**B-C**	**-**	**C**	**B-C**	**C**
Insulation	- Polyurethane hard foam - Dismountable polyester fleece	- Dismountable polyester fleece	- Polyurethane hard foam - Dismountable polyester fleece	- Polyurethane hard foam - Dismountable polyester fleece	- Dismountable insulation with M1 fireproof rating
Available range	200 ÷ 5000	2500 ÷ 4000	500 ÷ 5000	200 ÷ 5000	300 ÷ 4000
Installation	floor standing	floor standing	floor standing	floor standing	floor standing
Suggested Application	Traditional and solar installations	Traditional and solar installations limited height spaces	Industrial installations/ installations with steam generators	Traditional installations	Traditional installations

					
VASO STORAGE INOX A1	VASO STORAGE INOX A1	BOLLY® ST INOX	BOLLY® AP INOX	BOLLY® XL INOX	BOLLY® HY XL INOX
216	218	220	230	240	250
					
-	-	- Stainless steel 316L fixed heat exchangers	- Stainless steel 316L fixed heat exchangers	- Stainless steel 316L fixed heat exchangers	- Stainless steel 316L fixed heat exchangers - Integrated mild steel buffer tank
		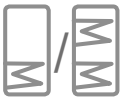			
					
C	**-**	**B-C**	**A-B**	**A-B-C**	**A-B-C**
- Class A1 fireproo glass/rock wool insulation + Aluminium cover hinged and removable.	- Dismountable polyester fleece	- Polyurethane hard foam - Dismountable polyester fleece	- Polyurethane hard foam	- Polyurethane hard foam - Dismountable polyester fleece	- Polyurethane hard foam
800 ÷ 4000	2500 ÷ 4000	150 ÷ 2000	150 ÷ 500	200 ÷ 500	300 ÷ 500
floor standing	floor standing	floor standing	floor standing	floor standing	floor standing
Traditional installations	Traditional and solar installations limited height spaces	Systems with heat pump and optional integration with solar and/or biomass boiler	Systems with heat pump and optional integration with solar and boiler	Systems with heat pump and optional integration with solar and boiler	Systems with heat pump and optional integration with solar and boiler

EXTRA **1 INOX**

STAINLESS STEEL 316L CALORIFIER WITH 1 EXTRACTABLE STAINLESS STEEL HEAT EXCHANGER



316L STAINLESS STEEL DHW STORAGE

316L STAINLESS STEEL HEAT EXCHANGER

100% HEATED STORAGE

APPLICATION
Production and storage of domestic hot water (DHW).
MATERIAL
Stainless Steel 316 L suitable for domestic hot water
HEAT EXCHANGER
Stainless steel 316L Antilegionella® heat exchanger, with tubes bent to the bottom
INSULATION
HARD: High thermal insulation with ecological polyurethane hard foam.
SOFT (DISMOUNTABLE): NOFIRE® polyester fleece 100% made of recyclable material, with high thermal insulation. Fire resistance class B-s2d0 according to EN 13501.
Grey PVC external lining.

CATHODE PROTECTION
Magnesium anode - Models > 1500 Nr. 2 magnesium anodes.
DRAIN
External confluence through drain connection.
GASKET- FLANGE PLATE
Silicone gaskets suitable for water intended for human consumption (tested according to 98/83/CE); Mild steel exchanger head with anticorrosion treatment.
WARRANTY
5 years (See general sales conditions and warranty)
ACCESSORIES AND SPARE PARTS
See Accessories section for the entire list.

		Model	Art. Nr.	Heat exchangers surface [m²]	ErP ENERGY EFFICIENCY CLASS
	 **EXTRA 1 XXB** HARD FOAM INSULATION	**200**	3072052300422	0,5	**B**
		300	3072052300423	0,75	**C**
		500	3072052300424	1	**C**
	 **EXTRA 1 XXC** DISMOUNTABLE SOFT FLEECE INSULATION	**800**	3072052300430	1,5	**C**
		1000	3072052300435	2	**C**
		1300	3072052300432	3	**C**
		1500	3072052300433	3	**C**
		2000	3072052300434	4	**C**
		2500	3072052300410	5	
		3000	3072052300412	6	
		4000	3072052300414	8	
		5000	3072052300416	10	

ACCESSORIES

ELECTRIC IMMERSION HEATERS



Mod.	Heated volume by electric immersion heater [lt]	MONOPHASE 1,5 kW	MONOPHASE 2 kW	MONOPHASE 3 kW	THREEPHASE 4 kW	THREEPHASE 5 kW	THREEPHASE 6 kW	THREEPHASE 9 kW	THREEPHASE 12 kW
		5240000000051	5240000000052	5240000000053	5240000000047	5240000000048	5240000000049	5240000000050	5240000000031
		Ignition time from 10 °C to 45 °C with electric immersion heaters [min]			Ignition time from 10 °C to 45 °C with electric immersion heaters [min]				
200	49	87	65	44	33	//	//	//	//
300	76	136	102	68	51	//	//	//	//
500	127	228	171	114	85	68	57	//	//
800	178	318	239	159	120	96	80	//	//
1000	243	436	327	218	163	131	109	73	54
1300	274	450	340	230	194	155	129	86	65
1500	288	516	387	258	297	238	198	132	99
2000	443	793	595	396	387	310	258	172	129
2500	577	1033	775	517	387	310	258	172	129
3000	577	1033	775	517	535	428	357	238	178
4000	797	1428	1071	714	699	559	466	311	233
5000	1040	1864	1398	932	699	559	466	311	233

FULL CONTROL electronic unit (mounted on tank)

Art. Nr.	for models
5220280000004	XXC
5220280000005	XXB



Titanium anode (for stainless steel calorifiers)

See Accessories section



Products designed and manufactured for using within temperature and pressure limits in accordance to Art. 4.3 Directive 2014/68/EU (P.E.D.)

EXTRA **1 INOX**

STAINLESS STEEL 316L CALORIFIER WITH 1 EXTRACTABLE STAINLESS STEEL HEAT EXCHANGER

STORAGE		HEAT EXCHANGER	
Pmax	Tmax	Pmax	Tmax
6 bar	95 °C	12 bar	110 °C

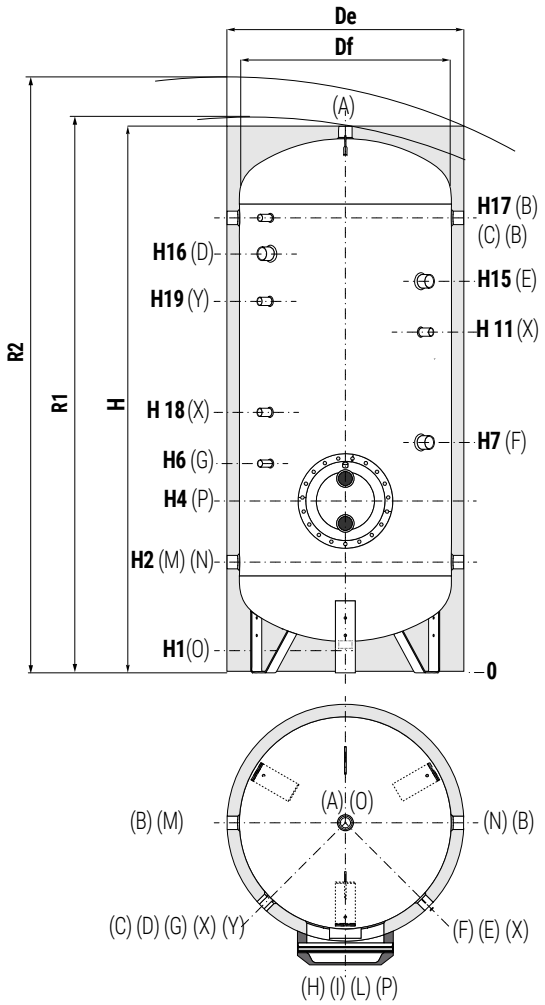

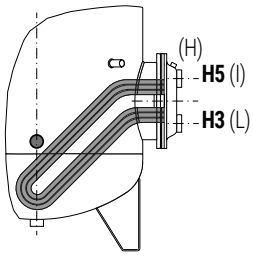

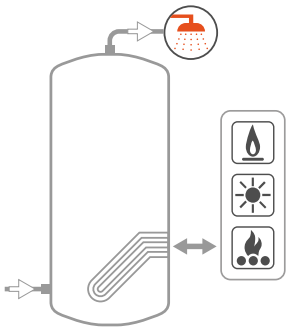

A	Domestic hot water outlet
B	Recirculation / Domestic hot water outlet
C	Connection for instrumentation G 1/2" F
D	Connection for electric immersion heater
E	Connection for 2nd magnesium anode G 1"1/4 F (only for models > 1500)
F	Connection for magnesium anode/Titanium anode G 1" 1/4 F
G	Connection for instrumentation G 1/2" F
H	Heat exchanger drain G 3/8" F
I	Primary circuit inlet
L	Primary circuit outlet
M	Domestic cold water circuit inlet
N	Alternative domestic cold water circuit inlet or connection for more tanks in series
O	Drain. For model 1000 connection G 1"1/2 F . for models > 1000 G 1" F
P	Flange
X	Connection for titanium anode G 3/4" F (>1500)
Y	Connection for titanium anode G 3/4" F (>3000)

Model	Volume	Weight	Df (vers. XXC)	De (vers. XXC)	De (vers. XXB)	H	R1	R2	H1	H2	H3	H4	H5	H6
	[lt]	[kg]	[mm]			[mm]								
200	192	57	//	//	550	1451	//	1552	81	316	351	401	451	511
300	294	72	//	//	650	1569	//	1698	149	409	444	494	544	604
500	504	98	//	//	750	1861	//	2006	141	426	461	511	561	621
800	762	137	790	1010	//	1943	2008	2200	113	428	473	563	653	713
1000	905	159	790	1010	//	2212	2270	2450	112	437	482	572	662	722
1300	1277	199	950	1210	//	2193	2275	2510	118	433	578	668	758	818
1500	1403	208	1000	1260	//	2177	2266	2530	112	447	592	682	772	832
2000	2024	332	1250	1510	//	2099	2231	2600	134	529	649	754	859	929
2500	2320	396	1250	1350	//	2299	2396	2680	134	529	649	754	859	929
3000	2925	466	1250	1350	//	2799	2879	3120	134	529	709	814	919	989
4000	3776	568	1400	1500	//	2872	2968	3250	117	557	737	842	947	1017
5000	4995	734	1600	1700	//	2909	3031	3380	94	564	734	839	944	1014

Model	H7	H11	H15	H16	H17	H18	H19	P	O	BMN	LI	D	A
									Connections F				
200	701	//	//	1066	1176	//	//	Øi220/Øe300	3/4"	1"1/4	1"	1"1/2	1"1/4
300	794	//	//	1159	1269	//	//	Øi220/Øe300	3/4"	1"1/4	1"	1"1/2	1"1/4
500	811	//	//	1380	1536	//	//	Øi220/Øe300	3/4"	1"1/4	1"	1"1/2	1"1/4
800	863	//	//	1382	1538	//	//	Øi300/Øe380	3/4"	1"1/4	2"	1"1/2	1"1/2
1000	922	//	//	1642	1797	//	//	Øi300/Øe380	3/4"	1"1/2	2"	2"	1"1/2
1300	918	//	//	1638	1793	//	//	Øi300/Øe380	1"	1"1/2	2"	2"	2"
1500	982	1522	//	1602	1757	1057	//	Øi300/Øe380	1"	1"1/2	2"	2"	2"
2000	1004	//	1524	1473	1629	1159	//	Øi300/Øe380	1"	2"	2"	2"	2"
2500	954	1529	1794	1710	1879	1179	//	Øi350/Øe430	1"	2"	2"	2"	2"
3000	1014	1629	2294	2210	2369	1279	//	Øi350/Øe430	1"	2"	2"	2"	2"
4000	1022	1657	2302	2225	2397	1307	2090	Øi350/Øe430	1"	2"	2"	2"	2"
5000	1019	1664	2319	2159	2404	1314	2024	Øi350/Øe430	1"	2"	2"	2"	2"

Net volume data according to EN 15332 available on product label.

Products designed and manufactured for using within temperature and pressure limits in accordance to Art. 4.3 Directive 2014/68/EU (P.E.D.)

EXTRA **1 INOX**

HEAT EXCHANGERS TECHNICAL DATA



Data have been calculated on following basis:
1) Primary circuit at T1 and proper energy source;
2) Production of DHW in continuous from 10 °C to t2;
3) DHW that can be taken in the first 10' and in the first hour from storage at t2, input 10 °C and output 45 °C;
4) Non-scaling sanitary water

LOWER
HEAT EXCHANGER

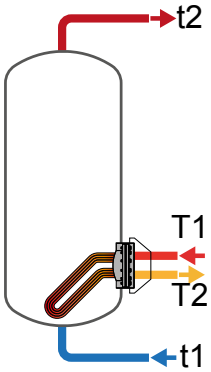

Model	Primary flow rate	Ignition time (minutes) from 10 °C to t2 and primary at T1				Maximum power exchange (kW) with primary at T1, secondary within 10-45 °C and constant use of DHW production				DHW continuous production lt/h within 10-45 °C and primary at T1HW production			
	[m³/h]	T1/t2				T1				T1			
		55/50	65/60	70/60	80/60	55	65	70	80	55	65	70	80
200	2	113	113	77	49	7	12	14	18	178	283	338	455
	1	147	148	102	65	6	9	11	14	141	218	258	344
300	3	112	113	76	48	11	17	21	28	274	435	520	701
	1,5	145	146	102	65	9	14	16	22	219	339	402	534
500	4	139	140	96	60	15	24	29	38	369	587	702	947
	2	180	181	125	80	12	19	22	29	297	460	545	725
800	6	146	147	101	64	23	36	44	59	570	908	1087	1465
	3	186	188	130	83	18	29	34	46	465	721	854	1136
1000	10	128	128	86	54	33	53	63	86	814	1309	1571	2127
	5	157	157	108	69	27	43	51	69	687	1077	1281	1711
1300	10	117	118	81	52	47	74	88	118	1154	1824	2176	2918
	5	149	151	105	67	39	59	70	92	950	1461	1726	2280
1500	15	120	119	82	51	51	81	98	133	1256	2022	2428	3290
	7,5	145	146	100	64	44	68	81	108	1075	1687	2008	2684
2000	20	121	122	83	52	69	111	133	180	1699	2738	3288	4453
	10	146	147	101	65	59	93	111	148	1465	2302	2741	3665
2500	20	118	119	81	51	84	134	160	216	2066	3309	3964	5352
	10	145	146	101	65	71	111	131	174	1755	2734	3244	4314
3000	20	128	127	87	55	100	159	190	255	2461	3926	4694	6321
	10	456	157	110	70	84	130	154	204	2082	3224	3817	5053
4000	20	126	127	87	56	131	207	247	330	3236	5121	6105	8168
	10	159	161	112	73	110	168	198	260	2718	4151	4903	6443
5000	20	137	138	96	61	162	253	301	401	3992	6270	7450	9921
	10	176	179	125	82	135	204	239	312	3332	5049	5923	7727

Model	Primary flow rate	DHW produced in the first 10 minutes in lt/10' input 10 °C output 45 °C, storage at t2 and primary at T1				DHW produced in the first hour in lt/60' input 10 °C output 45 °C, storage at t2 and primary at T1				Heat exchanger pressure drop	
	[m³/h]	T1/t2				T1/t2				[mmH$_2$O]	[mbar]
		55/50	65/60	70/60	80/60	55/50	65/60	70/60	80/60		
200	2	247	319	328	347	360	498	542	635	309	30,3
	1	241	308	314	329	330	446	478	547	84,74	8,3
300	3	371	480	494	524	545	755	823	968	372	36,5
	1,5	362	464	474	496	501	678	729	834	101,02	9,9
500	4	616	791	810	851	849	1162	1254	1450	419	41,1
	2	604	770	784	814	792	1061	1129	1273	113,381	11,1
800	6	964	1237	1267	1330	1325	1812	1955	2258	718	70,4
	3	946	1206	1228	1275	1241	1663	1769	1995	189,22	18,6
1000	10	1164	1504	1548	1640	1680	2333	2543	2987	1380	135,3
	5	1143	1465	1499	1571	1578	2147	2311	2655	358,5	35,2
1300	10	1644	2118	2177	2301	2375	3273	3555	4149	1020	100,2
	5	1610	2058	2102	2194	2211	2983	3195	3638	262,0	25,7
1500	15	1809	2337	2405	2548	2605	3618	3942	4632	2295	225,1
	7,5	1779	2281	2335	2447	2460	3350	3606	4147	589,6	57,8
2000	20	2592	3342	3434	3628	3668	5076	5516	6448	2996	293,8
	10	2553	3269	3343	3497	3481	4727	5079	5818	766,42	75,2
2500	20	2988	3856	3965	4196	4296	5951	6475	7586	2436	238,9
	10	2936	3760	3845	4023	4047	5491	5899	6755	624	61,2
3000	20	3748	4827	4955	5226	5307	7314	7928	9230	2836	278,1
	10	3685	4710	4809	5015	5004	6752	7226	8215	723	70,9
4000	20	4842	6232	6396	6740	6892	9475	10263	11913	3896	382,1
	10	4756	6070	6196	6452	6477	8699	9301	10533	989	97
5000	20	6362	8166	8363	8775	8891	12137	13081	15058	4707	461,6
	10	6252	7963	8109	8409	8363	11161	11860	13303	1192	116,9

MAXIMUM STORAGE EXPLOITATION WITH CURVED ANTILEGIONELLA® HEAT EXCHANGER




Model	Heated volume: Standard heat exchanger	Storage volume: Heat exchanger for 100% heated volume	Advantage in exploited volume	Advantage in percentage
	[lt]	[lt]	[lt]	[%]
200	165	190	25	**13%**
300	251	285	34	**12%**
500	438	485	47	**10%**
800	680	750	70	**10%**
1000	800	900	100	**13%**
1300	1150	1260	110	**10%**




Model	Heated volume: Standard heat exchanger	Storage volume: Heat exchanger for 100% heated volume	Advantage in exploited volume	Advantage in percentage
	[lt]	[lt]	[lt]	[%]
1500	1224	1445	221	**15%**
2000	1684	1978	294	**15%**
2500	1905	2315	410	**18%**
3000	2438	2921	483	**17%**
4000	3113	3769	656	**17%**
5000	4116	4982	866	**17%**

EXTRA **1 INOX**

HEAT EXCHANGERS PRESSURE DROP





Lower heat exchangers surface [m2]	
200	0,5
300	0,75
500	1,5
800	2
1000	3
1300	3
1500	3
2000	4
2500	5
3000	6
4000	8
5000	10

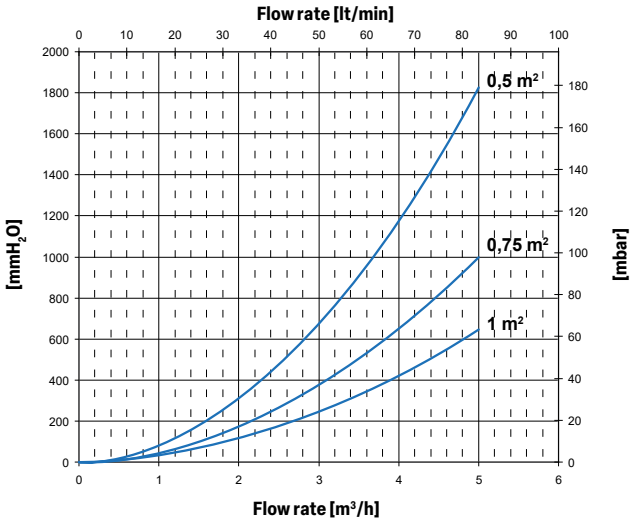

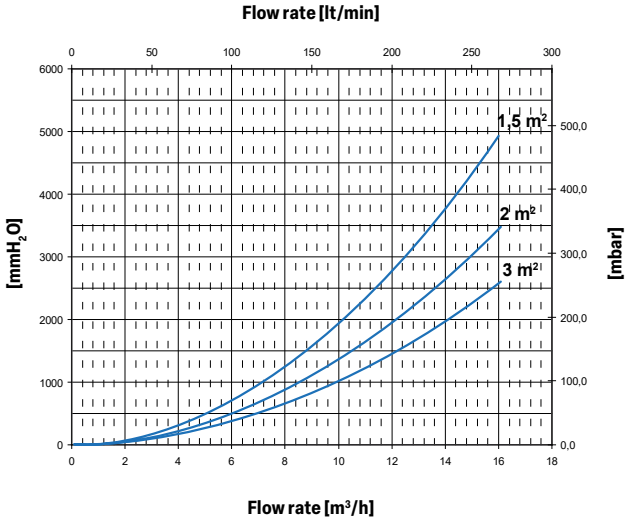

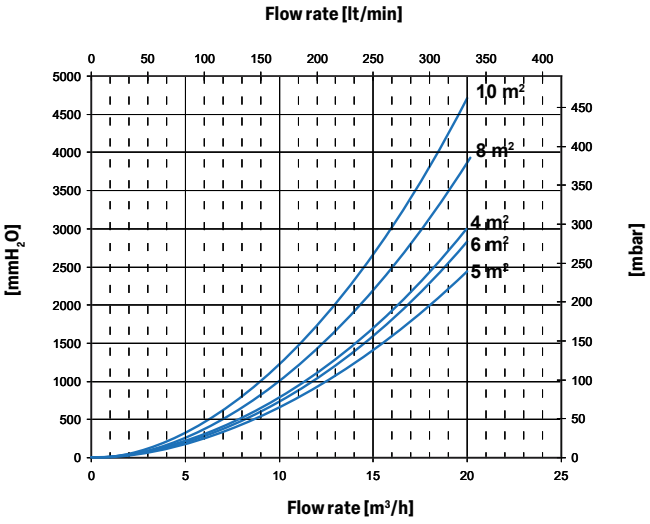

PERFORMANCE CHARTS AT PAGE 150-151

EXAMPLE OF INSTALLATION WITH **EXTRA 1 INOX**

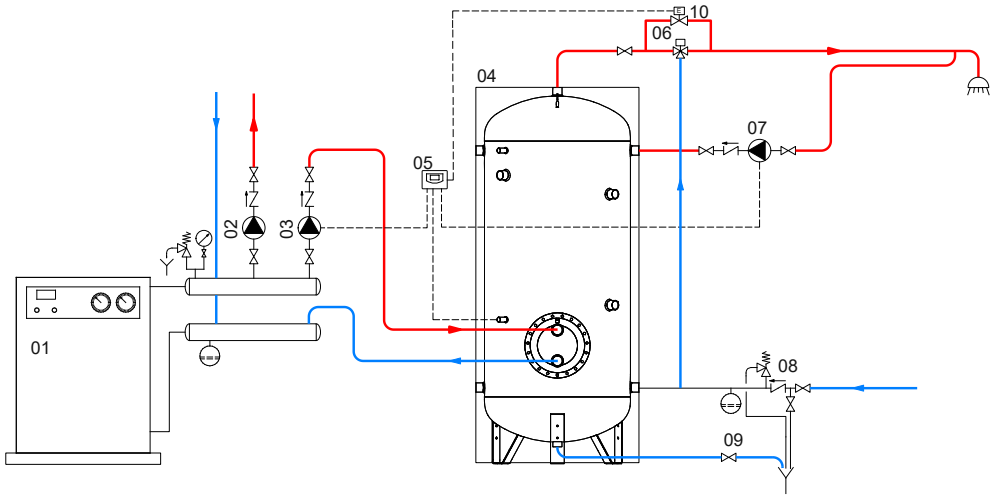

1	Generator	4	Extra 1 Inox	7	D.H.W. recirculation group	10	By-pass solenoid valve
2	Heating system circulation group	5	FULL CONTROL electronic unit / thermostat	8	Hydraulic safety group		
3	D.H.W. circulation group	6	Thermostatic mixing valve	9	Blowdown valve		

The following schemes are purely illustrative. To realize the installation, always refer to a qualified technician.

EXTRA **1 INOX COMPACT**

STAINLESS STEEL 316L CALORIFIERS, SUITABLE FOR LOW-CEILINGED ROOM, WITH 1 EXTRACTABLE STAINLESS STEEL HEAT EXCHANGER



APPLICATION
Production and storage of domestic hot water (DHW).
Suitable for low-ceilinged room.
MATERIAL
Stainless Steel 316 L suitable for domestic hot water
HEAT EXCHANGER
Stainless steel 316L Antilegionella® heat exchanger, with tubes bent to the bottom
INSULATION (DISMOUNTABLE)
NOFIRE® polyester fleece 100% made of recyclable material, with high thermal insulation. Fire resistance class B-s2d0 according to EN 13501. Grey PVC external lining.
CATHODE PROTECTION
Nr. 2 magnesium anodes.
DRAIN
External confluence through drain connection.
GASKET- FLANGE PLATE
Silicone gaskets suitable for water intended for human consumption (tested according to 98/83/CE); Mild steel exchanger head with anticorrosion treatment.
WARRANTY
5 years (See general sales conditions and warranty)
ACCESSORIES AND SPARE PARTS
See Accessories section for the entire list.

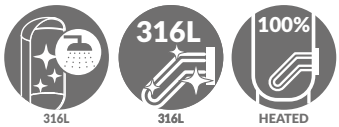

316L STAINLESS STEEL DHW STORAGE | 316L STAINLESS STEEL HEAT EXCHANGER | HEATED STORAGE




EXTRA 1 COMPACT XXC
DISMOUNTABLE SOFT FLEECE INSULATION

Model	Art. Nr.	Heat exchangers surface [m²]
2500	3072052300411	5
3000	3072052300413	6
4000	3072052300415	8

ACCESSORIES

ELECTRIC IMMERSION HEATERS

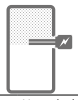

Mod.	Heated volume by electric immersion heater [lt]	MONOPHASE 1,5 kW	MONOPHASE 2 kW	MONOPHASE 3 kW	THREEPHASE 4 kW	THREEPHASE 5 kW	THREEPHASE 6 kW	THREEPHASE 9 kW	THREEPHASE 12 kW
		5240000000051	5240000000052	5240000000053	5240000000047	5240000000048	5240000000049	5240000000050	5240000000031
		Ignition time from 10 °C to 45 °C with electric immersion heaters [min]			Ignition time from 10 °C to 45 °C with electric immersion heaters [min]				
2500	797	1428	1071	714	535	428	357	238	178
3000	874	1565	1173	782	587	469	391	261	196
4000	924	1655	1241	828	621	497	414	276	207

FULL CONTROL electronic unit (mounted on tank)

Art. Nr.	for models
5220280000004	XXC



Thermometer

Art. Nr.
5032240000107
5 units box



Titanium anode (for stainless steel calorifiers)

See Accessories section



Products designed and manufactured for using within temperature and pressure limits in accordance to Art. 4.3 Directive 2014/68/EU (P.E.D.)

EXTRA **1 INOX COMPACT**

STAINLESS STEEL 316L CALORIFIERS, SUITABLE FOR LOW-CEILINGED ROOM, WITH 1 EXTRACTABLE STAINLESS STEEL HEAT EXCHANGER

STORAGE		HEAT EXCHANGER	
Pmax	Tmax	Pmax	Tmax
6 bar	95 °C	12 bar	110 °C

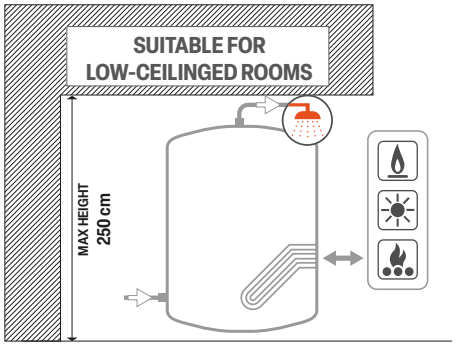

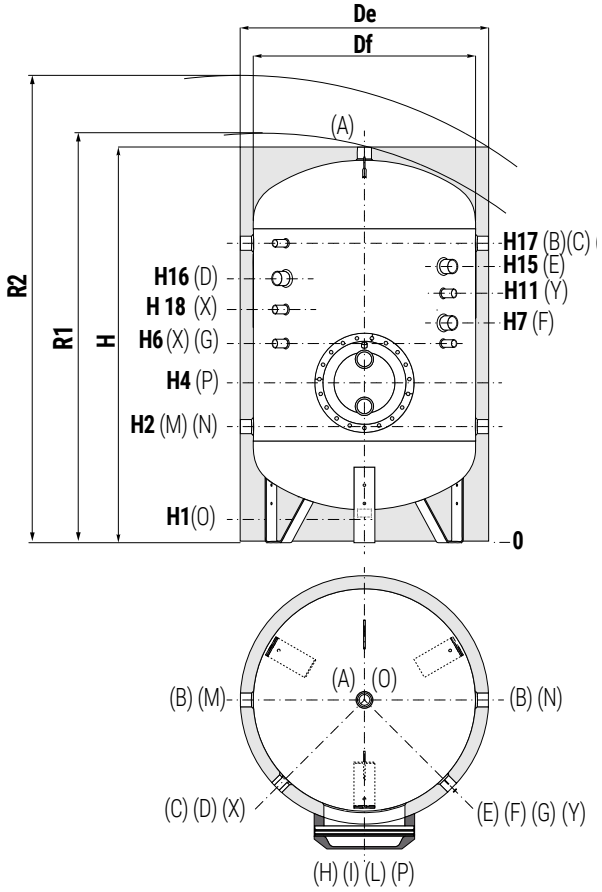

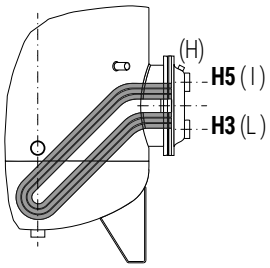

A	Domestic hot water outlet G 2" F
B	Recirculation / Domestic hot water outlet G 2" F
C	Connection for instrumentation G 1/2" F
D	Connection for electric immersion heater G 2" F
E	Connection for 2nd magnesium anode/Titanium anode G 1"1/4 F
F	Connection for magnesium anode/Titanium anode G 1" 1/4 F
G	Connection for instrumentation G 1/2" F
H	Heat exchanger drain G 3/8" F
I	Primary circuit inlet G 2" F
L	Primary circuit outlet G 2" F
M	Domestic cold water circuit inlet G 2" F
N	Alternative domestic cold water circuit inlet or connection for more tanks in series G 2" F
O	Drain G 1" F
P	Flange
X	Connection for titanium anode G 3/4" F
Y	Connection for titanium anode G 3/4" F (only 4000)

Model	Volume	Weight	Df	De	H	R1	R2	H1	H2	H3
	[lt]	[kg]	[mm]							
2500	2627	382	1400	1500	2122	2251	2610	117	557	677
3000	3029	415	1500	1600	2131	2276	2670	106	556	736
4000	3990	553	1600	1700	2409	2555	2960	94	564	744

Model	H4	H5	H6	H7	H11	H15	H16	H17	H18	P
	[mm]									
2500	782	887	957	982	//	1552	1501	1657	1180	Øi350/Øe430
3000	841	946	1016	981	//	1551	1500	1656	1180	Øi350/Øe430
4000	849	954	1024	1029	1611	1809	1732	1904	1250	Øi350/Øe430

Net volume data according to EN 15332 available on product label.

Products designed and manufactured for using within temperature and pressure limits in accordance to Art. 4.3 Directive 2014/68/EU (P.E.D.)

EXTRA **1 INOX COMPACT**

HEAT EXCHANGERS TECHNICAL DATA



Data have been calculated on following basis:
1) Primary circuit at T1 and proper energy source;
2) Production of DHW in continuous from 10 °C to t2;
3) DHW that can be taken in the first 10' and in the first hour from storage at t2, input 10 °C and output 45 °C;
4) Non-scaling sanitary water

LOWER
HEAT EXCHANGER

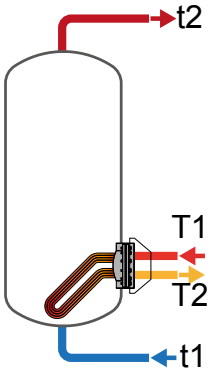

Model	Primary flow rate	Ignition time (minutes) from 10 °C to t2 and primary at T1				Maximum power exchange (kW) with primary at T1, secondary within 10-45 °C and constant use of DHW production				DHW continuous production lt/h within 10-45 °C and primary at T1HW production			
	[m^3/h]	T1/t2				T1				T1			
		55/50	65/60	70/60	80/60	55	65	70	80	55	65	70	80
2500	20	134	134	92	58	69	111	133	180	1699	2738	3288	4453
	10	164	164	114	73	59	93	111	148	1465	2302	2741	3665
3000	20	130	130	90	57	100	159	190	255	2461	3926	4694	6321
	10	162	162	113	73	84	130	154	204	2082	3224	3817	5053
4000	20	133	133	92	59	131	207	247	330	3236	5121	6105	8168
	10	170	170	119	77	110	168	198	260	2718	4151	4903	6443

Model	Primary flow rate	DHW produced in the first 10 minutes in lt/10' input 10 °C output 45 °C, storage at t2 and primary at T1				DHW produced in the first hour in lt/60' input 10 °C output 45 °C, storage at t2 and primary at T1				Heat exchanger pressure drop	
	[m^3/h]	T1/t2				T1/t2				[mmH_2O]	[mbar]
		55/50	65/60	70/60	80/60	55/50	65/60	70/60	80/60		
2500	20	3276	4198	4289	4484	4352	5932	6372	7304	2436	238,9
	10	3237	4125	4198	4352	4165	5583	5934	6673	624	61,2
3000	20	3862	4969	5097	5368	5420	7455	8069	9371	2836	278,1
	10	3798	4852	4950	5156	5117	6893	7368	8357	723	70,9
4000	20	5090	6542	6706	7050	7140	9785	10573	12223	3896	382,1
	10	5004	6380	6506	6762	6725	9009	9611	10843	989	97,0

MAXIMUM STORAGE EXPLOITATION WITH CURVED ANTILEGIONELLA® HEAT EXCHANGER

Cordivari heat exchangers, with tubes bent to the bottom, are able to heat the complete volume in an homogeneus way.
Energy storaging is therefore improved and ignition time data refer to the complete volume of the tank, while in traditional straight heat exchangers equipped calorifiers, a range between 9-17% of the volume remains cold.





Model	Heated volume: Standard heat exchanger	Storage volume: Heat exchanger for 100% heated volume	Advantage in exploited volume	Advantage in percentage
	[lt]	[lt]	[lt]	[%]
2500	1905	2315	410	**18%**
3000	2438	2921	483	**17%**
4000	3113	3769	656	**17%**

EXTRA **1 INOX COMPACT**

HEAT EXCHANGERS PRESSURE DROP





Lower heat exchangers surface [m²]	
2500	5
3000	6
4000	8

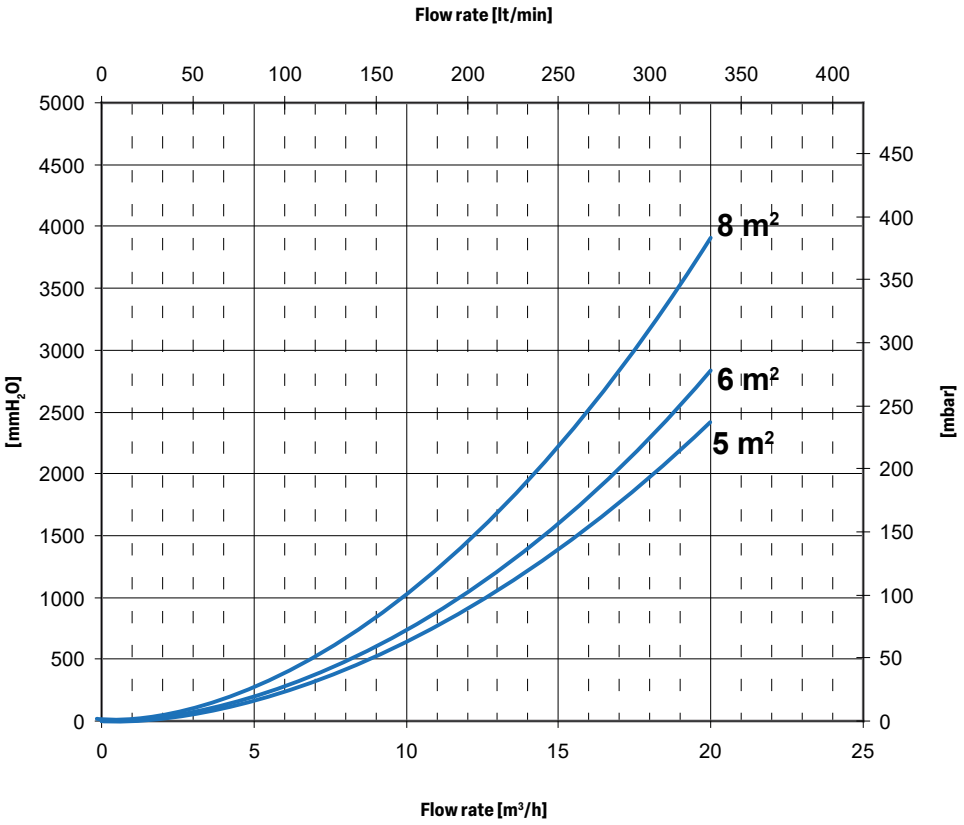

PERFORMANCE CHARTS AT PAGE 150-151

EXAMPLE OF INSTALLATION WITH **EXTRA 1 INOX COMPACT**

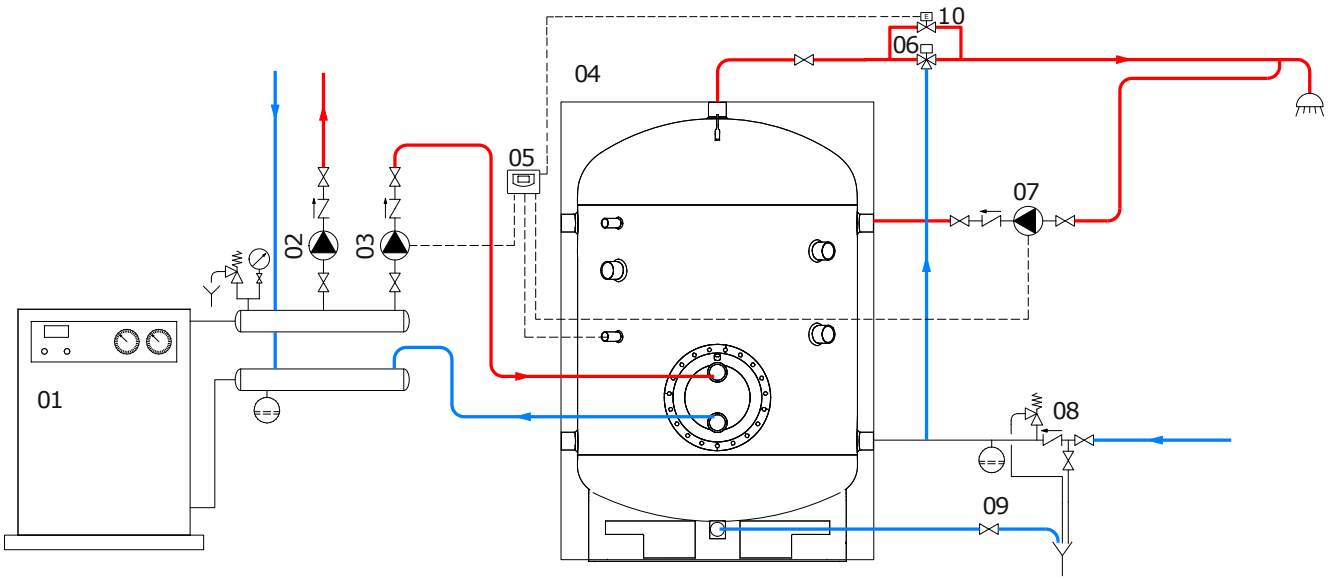

1	Generator	4	EXTRA 1 INOX COMPACT	7	D.H.W. recirculation group	10	By-pass solenoid valve
2	Heating system circulation group	5	FULL CONTROL electronic unit / thermostat	8	Hydraulic safety group		
3	D.H.W. circulation group	6	Thermostatic mixing valve	9	Blowdown valve		

The following schemes are purely illustrative. To realize the installation, always refer to a qualified technician.

EXTRA **2 INOX**

STAINLESS STEEL 316L CALORIFIER WITH 2 EXTRACTABLE STAINLESS STEEL HEAT EXCHANGERS



APPLICATION
Production and storage of domestic hot water (DHW).
MATERIAL
Stainless Steel 316 L suitable for domestic hot water
HEAT EXCHANGER
Nr. 2 stainless steel 316l antilegionella® heat exchangers (upper exchanger is straight and the lower is bent to the bottom).
INSULATION
HARD: High thermal insulation with ecological polyurethane hard foam.
SOFT (DISMOUNTABLE): NOFIRE® polyester fleece 100% made of recyclable material, with high thermal insulation. Fire resistance class B-s2d0 according to EN 13501. Grey PVC external lining.

CATHODE PROTECTION
Magnesium anode - Models > 1500 Nr. 2 magnesium anodes.
DRAIN
External confluence through drain connection.
GASKET- FLANGE PLATE
Silicone gaskets suitable for water intended for human consumption (tested according to 98/83/CE); Mild steel exchanger head with anticorrosion treatment.
WARRANTY
5 years (See general sales conditions and warranty)
ACCESSORIES AND SPARE PARTS
See Accessories section for the entire list.

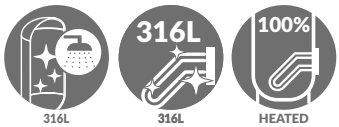

316L STAINLESS STEEL DHW STORAGE — 316L STAINLESS STEEL HEAT EXCHANGER — HEATED STORAGE

		Model	Art. Nr.	Heat exchangers surface [m²] Lower	Upper	ErP ENERGY EFFICIENCY CLASS
	**EXTRA 2 XXB** HARD FOAM INSULATION	**200**	3082052300222	0,5	0,5	**B**
		300	3082052300223	0,75	0,75	**C**
		500	3082052300224	1,5	1,5	**C**
	**EXTRA 2 XXC** DISMOUNTABLE SOFT FLEECE INSULATION	**800**	3082052300230	2	2	**C**
		1000	3082052300235	3	2	**C**
		1300	3082052300232	3	3	**C**
		1500	3082052300233	3	3	**C**
		2000	3082052300234	4	4	**C**
		2500	3082052300210	5	5	
		3000	3082052300212	6	6	
		4000	3082052300214	8	8	
		5000	3082052300216	10	10	

ACCESSORIES

ELECTRIC IMMERSION HEATERS



Mod.	Heated volume by electric immersion heater [lt]	MONOPHASE **1,5** kW	**2** kW	**3** kW	THREEPHASE **4** kW	**5** kW	**6** kW	**9** kW	**12** kW
		5240000000051	5240000000052	5240000000053	5240000000047	5240000000048	5240000000049	5240000000050	5240000000031
		Ignition time from 10 °C to 45 °C with electric immersion heaters [min]			Ignition time from 10 °C to 45 °C with electric immersion heaters [min]				
200	49	87	65	44	33	//	//	//	//
300	76	136	102	68	51	//	//	//	//
500	127	228	171	114	85	68	57	//	//
800	178	318	239	159	120	96	80	//	//
1000	243	436	327	218	163	131	109	73	54
1300	274	450	340	230	194	155	129	86	65
1500	288	516	387	258	297	238	198	132	99
2000	443	793	595	396	387	310	258	172	129
2500	577	1033	775	517	387	310	258	172	129
3000	577	1033	775	517	535	428	357	238	178
4000	797	1428	1071	714	699	559	466	311	233
5000	1040	1864	1398	932	699	559	466	311	233

FULL CONTROL electronic unit (mounted on tank)

Art. Nr.	for models
5220280000004	XXC
5220280000005	XXB



Titanium anode (for stainless steel calorifiers)

See Accessories section



Products designed and manufactured for using within temperature and pressure limits in accordance to Art. 4.3 Directive 2014/68/EU (P.E.D.)

EXTRA **2 INOX**

STAINLESS STEEL 316L CALORIFIER WITH 2 EXTRACTABLE STAINLESS STEEL HEAT EXCHANGERS

STORAGE		HEAT EXCHANGER	
Pmax	Tmax	Pmax	Tmax
6 bar	95 °C	12 bar	110 °C

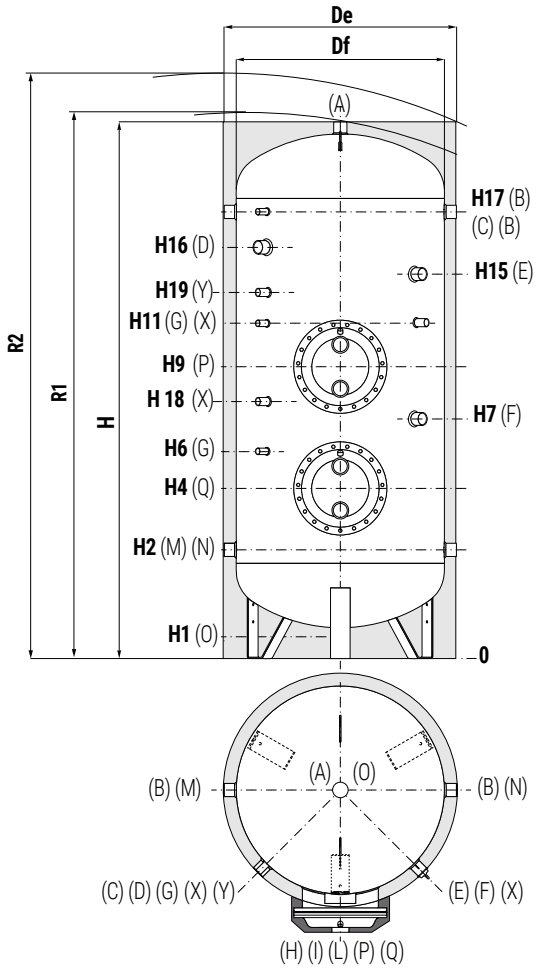

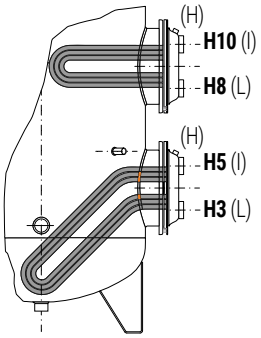

Models with 3 heat exchangers are available on request

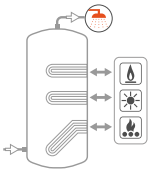

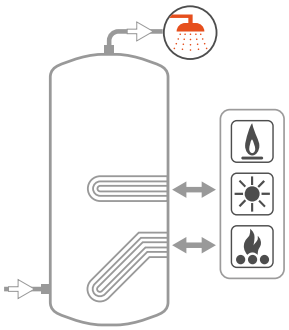

A	Domestic hot water outlet
B	Recirculation / Domestic hot water outlet G 2" F
C	Connection for instrumentation G 1/2" F
D	Connection for electric immersion heater
E	Connection for 2nd magnesium anode/Titanium anode G 1"1/4 F (only for models > 1500)
F	Connection for magnesium anode/Titanium anode G 1" 1/4 F
G	Connection for instrumentation G 1/2" F
H	Heat exchanger drain G 3/8" F
I	Primary circuit inlet
L	Primary circuit outlet
M	Domestic cold water circuit inlet
N	Alternative domestic cold water circuit inlet or connection for more tanks in series
O	Drain. For model 1000 connection G 1"1/2 F . for models > 1000 G 1" F
P	Flange
X	Connection for titanium anode G 3/4" F (>1300)
Y	Connection for titanium anode G 3/4" F (>2500)

Model	Volume	Weight	Df (vers. XXC)	De (vers. XXC)	De (vers. XXB)	H	R1	R2	H1	H2	H3	H4	H5	H6	H7
	[lt]	[kg]	[mm]			[mm]									
200	195	73	//	//	550	1451	-	1560	81	316	351	401	451	511	701
300	297	91	//	//	650	1569	-	1700	149	409	444	494	544	604	794
500	507	119	//	//	750	1861	-	2010	141	426	461	511	561	621	811
800	768	161	790	1010	//	1943	2008	2190	113	428	473	563	653	713	863
1000	910	185	790	1010	//	2212	2270	2440	112	437	482	572	662	722	922
1300	1283	228	950	1210	//	2193	2275	2510	118	433	578	668	758	818	918
1500	1409	237	1000	1260	//	2177	2266	2520	112	447	592	682	772	832	982
2000	2032	370	1250	1510	//	2099	2231	2590	134	529	649	754	859	929	1004
2500	2320	383	1250	1350	//	2299	2396	2670	134	529	649	754	859	929	954
3000	2925	518	1250	1350	//	2799	2879	3110	134	529	709	814	919	989	1014
4000	3776	634	1400	1500	//	2872	2968	3250	117	557	737	842	947	1017	1022
5000	4995	820	1600	1700	//	2909	3031	3370	94	564	734	839	944	1014	1019

Model	H8	H9	H10	H11	H12	H15	H16	H17	H18	H19	QP	O	BMN	IL	D	A
	[mm]											Connections F				
200	801	851	901	961	//	//	1066	1176	//	//	Øi220/Øe300	3/4"	1"1/4	1"	1"1/2	1"1/4
300	894	944	994	1054	//	//	1159	1269	//	//	Øi220/Øe300	3/4"	1"1/4	1"	1"1/2	1"1/4
500	911	961	1011	1071	//	//	1380	1536	//	//	Øi220/Øe300	3/4"	1"1/4	1"	1"1/2	1"1/4
800	1003	1093	1183	1243	//	//	1382	1538	//	//	Øi300/Øe380	3/4"	1"1/4	2"	1"1/2	1"1/2
1000	1032	1122	1212	1272	//	//	1642	1797	//	//	Øi300/Øe380	3/4"	1"1/2	2"	2"	1"1/2
1300	1078	1168	1258	1318	//	//	1638	1793	//	//	Øi300/Øe380	1"	1"1/2	2"	2"	2"
1500	1142	1232	1322	1382	//	1552	1602	1757	1057	//	Øi300/Øe380	1"	1"1/2	2"	2"	2"
2000	1229	1334	1439	1404	//	1524	1473	1629	1159	//	Øi350/Øe430	1"	2"	2"	2"	2"
2500	1249	1354	1459	1529	//	1794	1710	1879	1179	//	Øi350/Øe430	1"	2"	2"	2"	2"
3000	1349	1454	1559	1629	//	2294	2210	2369	1279	2075	Øi350/Øe430	1"	2"	2"	2"	2"
4000	1377	1482	1587	1657	1980	2302	2225	2397	1307	2090	Øi350/Øe430	1"	2"	2"	2"	2"
5000	1384	1489	1594	1664	1992	2319	2159	2404	1314	2024	Øi350/Øe430	1"	2"	2"	2"	2"

Net volume data according to EN 15332 available on product label.

Products designed and manufactured for using within temperature and pressure limits in accordance to Art. 4.3 Directive 2014/68/EU (P.E.D.)

EXTRA **2 INOX**

HEAT EXCHANGERS TECHNICAL DATA



Data have been calculated on following basis:
1) Primary circuit at T1 and proper energy source;
2) Production of DHW in continuous from 10 °C to t2;
3) DHW that can be taken in the first 10' and in the first hour from storage at t2, input 10 °C and output 45 °C;
4) Non-scaling sanitary water

Model	Primary flow rate	Ignition time (minutes) from 10 °C to t2 and primary at T1				Maximum power exchange (kW) with primary at T1, secondary within 10-45 °C and constant use of DHW production				DHW continuous production lt/h within 10-45 °C and primary at T1HW production			
	[m³/h]	T1/t2				T1				T1			
		55/50	65/60	70/60	80/60	55	65	70	80	55	65	70	80
200	2	113	113	77	49	7	12	14	18	178	283	338	455
	1	147	148	102	65	6	9	11	14	141	218	258	344
300	3	112	113	76	48	11	17	21	28	274	435	520	701
	1,5	145	146	102	65	9	14	16	22	219	339	402	534
500	6	139	140	96	60	15	24	29	38	369	587	702	947
	3	180	181	125	80	12	19	22	29	297	460	545	725
800	10	146	147	101	64	23	36	44	59	570	908	1087	1465
	5	186	188	130	83	18	29	34	46	465	721	854	1136
1000	15	128	128	86	54	33	53	63	86	814	1309	1571	2127
	7,5	157	157	108	69	27	43	51	69	687	1077	1281	1711
1300	15	117	118	81	52	47	74	88	118	1154	1824	2176	2918
	7,5	149	151	105	67	39	59	70	92	950	1461	1726	2280
1500	15	120	119	82	51	51	81	98	133	1256	2022	2428	3290
	7,5	145	146	100	64	44	68	81	108	1075	1687	2008	2684
2000	20	121	122	83	52	69	111	133	180	1699	2738	3288	4453
	10	146	147	101	65	59	93	111	148	1465	2302	2741	3665
2500	20	118	119	81	51	84	134	160	216	2066	3309	3964	5352
	10	145	146	101	65	71	111	131	174	1755	2734	3244	4314
3000	20	128	127	87	55	100	159	190	255	2461	3926	4694	6321
	10	456	157	110	70	84	130	154	204	2082	3224	3817	5053
4000	20	126	127	87	56	131	207	247	330	3236	5121	6105	8168
	10	159	161	112	73	110	168	198	260	2718	4151	4903	6443
5000	20	137	138	96	61	162	253	301	401	3992	6270	7450	9921
	10	176	179	125	82	135	204	239	312	3332	5049	5923	7727

UPPER
HEAT EXCHANGER

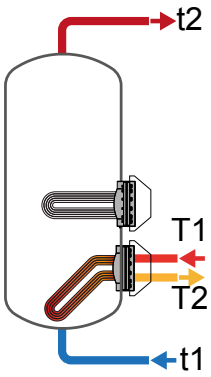

Model	Primary flow rate	DHW produced in the first 10 minutes in lt/10' input 10 °C output 45 °C, storage at t2 and primary at T1				DHW produced in the first hour in lt/60' input 10 °C output 45 °C, storage at t2 and primary at T1				Heat exchanger pressure drop	
	[m³/h]	T1/t2				T1/t2				[mmH$_2$O]	[mbar]
		55/50	65/60	70/60	80/60	55/50	65/60	70/60	80/60		
200	2	247	319	328	347	360	498	542	635	309	30,3
	1	241	308	314	329	330	446	478	547	84,74	8,3
300	3	371	480	494	524	545	755	823	968	372	36,5
	1,5	362	464	474	496	501	678	729	834	101,02	9,9
500	6	616	791	810	851	849	1162	1254	1450	419	41,1
	3	604	770	784	814	792	1061	1129	1273	113,381	11,1
800	10	964	1237	1267	1330	1325	1812	1955	2258	718	70,4
	5	946	1206	1228	1275	1241	1663	1769	1995	189,22	18,6
1000	15	1164	1504	1548	1640	1680	2333	2543	2987	1380	135,3
	7,5	1143	1465	1499	1571	1578	2147	2311	2655	358,5	35,2
1300	15	1644	2118	2177	2301	2375	3273	3555	4149	1020	100,2
	7,5	1610	2058	2102	2194	2211	2983	3195	3638	262,0	25,7
1500	15	1809	2337	2405	2548	2605	3618	3942	4632	2295	225,1
	7,5	1779	2281	2335	2447	2460	3350	3606	4147	589,6	57,8
2000	20	2592	3342	3434	3628	3668	5076	5516	6448	2996	293,8
	10	2553	3269	3343	3497	3481	4727	5079	5818	766,42	75,2
2500	20	2988	3856	3965	4196	4296	5951	6475	7586	2436	238,9
	10	2936	3760	3845	4023	4047	5491	5899	6755	624	61,2
3000	20	3748	4827	4955	5226	5307	7314	7928	9230	2836	278,1
	10	3685	4710	4809	5015	5004	6752	7226	8215	723	70,9
4000	20	4842	6232	6396	6740	6892	9475	10263	11913	3896	382,1
	10	4756	6070	6196	6452	6477	8699	9301	10533	989	97
5000	20	6362	8166	8363	8775	8891	12137	13081	15058	4707	461,6
	10	6252	7963	8109	8409	8363	11161	11860	13303	1192	116,9

Cordivari heat exchangers, with tubes bent to the bottom, are able to heat the complete volume in an homogeneus way.
Energy storaging is therefore improved and ignition time data refer to the complete volume of the tank, while in traditional straight heat exchangers equipped calorifiers, a range between 9-17% of the volume remains cold.

EXTRA **2 INOX**

HEAT EXCHANGERS TECHNICAL DATA



Data have been calculated on following basis:
1) Primary circuit at T1 and proper energy source;
2) Production of DHW in continuous from 10 °C to t2;
3) DHW that can be taken in the first 10' and in the first hour from storage at t2, input 10 °C and output 45 °C;
4) Non-scaling sanitary water

Model	Primary flow rate	Ignition time (minutes) from 10 °C to t2 and primary at T1				Maximum power exchange (kW) with primary at T1, secondary within 10-45 °C and constant use of DHW production				DHW continuous production lt/h within 10-45 °C and primary at T1HW production			
	[m³/h]	T1/t2				T1				T1			
		55/50	65/60	70/60	80/60	55	65	70	80	55	65	70	80
200	2	57	57	39	25	7	11	14	18	179	283	339	456
	1	74	75	52	33	6	9	11	14	142	219	259	344
300	3	57	57	39	25	11	18	21	28	275	436	521	702
	1,5	73	73	52	33	9	14	16	22	220	340	403	535
500	4	52	52	36	23	23	37	44	59	573	911	1090	1468
	2	66	55	46	30	19	29	35	46	468	724	857	1139
800	6	62	62	42	27	33	53	64	86	817	1312	1573	2129
	3	75	76	53	34	28	44	52	69	690	1079	1284	1715
1000	10	80	80	55	35	32	51	61	82	783	1252	1501	2029
	5	100	100	70	45	26	41	48	65	647	1008	1198	1599
1300	10	71	71	49	31	47	74	88	118	1154	1824	2176	2920
	5	90	91	63	41	39	59	70	92	950	1461	1726	2280
1500	15	68	68	47	30	51	82	98	133	1259	2026	2430	3295
	7,5	82	83	57	37	44	68	81	109	1077	1690	2011	2687
2000	20	70	70	48	30	69	111	133	180	1702	2741	3293	4463
	10	84	85	59	37	59	93	111	148	1468	2306	2744	3668
2500	20	59	59	40	25	84	134	160	216	2069	3313	3969	5358
	10	71	72	50	32	71	111	131	174	1758	2738	3249	4318
3000	20	71	72	49	31	100	159	190	255	2465	3931	4698	6325
	10	88	89	62	40	84	130	154	204	2086	3229	3821	5057
4000	20	71	72	50	32	131	207	247	330	3242	5126	6112	8179
	10	89	90	63	41	110	168	198	260	2723	4167	4909	6448
5000	20	78	78	54	35	162	253	301	400	3998	6275	7459	9924
	10	99	100	71	46	135	204	239	312	3338	5055	5930	7735

LOWER
HEAT EXCHANGER

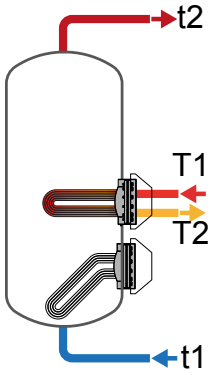

Model	Primary flow rate	DHW produced in the first 10 minutes in lt/10' input 10 °C output 45 °C, storage at t2 and primary at T1				DHW produced in the first hour in lt/60' input 10 °C output 45 °C, storage at t2 and primary at T1				Heat exchanger pressure drop	
	[m³/h]	T1/t2				T1/t2				[mmH$_2$O]	[mbar]
		55/50	65/60	70/60	80/60	55/50	65/60	70/60	80/60		
200	2	140	184	194	213	253	364	408	502	294,35	28,9
	1	133	174	180	194	223	312	344	412	80,5	7,9
300	3	215	284	298	328	389	560	628	773	355,7	34,9
	1,5	206	268	279	301	345	483	534	639	95,97	9,4
500	4	418	555	585	648	781	1132	1275	1577	682	66,9
	2	400	524	546	593	697	982	1088	1314	179	17,6
800	6	689	910	954	1046	1207	1741	1950	2395	1311	128,6
	3	668	871	905	977	1105	1555	1719	2063	341	33,4
1000	10	816	1066	1107	1195	1312	1859	2058	2480	1311	128,6
	5	794	1025	1057	1124	1203	1664	1816	2136	341	33,4
1300	10	1072	1404	1463	1587	1803	2559	2841	3436	969,3	94,9
	5	1038	1344	1388	1480	1640	2269	2481	2924	248,9	24,4
1500	15	1149	1512	1579	1723	1947	2795	3118	3810	2181	213,9
	7,5	1119	1456	1509	1622	1801	2526	2783	3324	560	54,9
2000	20	1595	2095	2187	2382	2672	3831	4273	5209	2846	279,1
	10	1556	2023	2096	2250	2485	3483	3834	4573	728	71,4
2500	20	1652	2186	2296	2527	2963	4285	4809	5921	2314	226,9
	10	1600	2091	2176	2354	2714	3825	4233	5089	592	58,1
3000	20	2303	3021	3149	3420	3865	5511	6124	7426	2745	269,2
	10	2240	2904	3003	3209	3561	4949	5423	6411	700	68,6
4000	20	2972	3894	4059	4403	5026	7141	7930	9583	3701	362,9
	10	2886	3735	3858	4115	4610	6374	6967	8198	939	92,1
5000	20	3882	5066	5263	5674	6414	9040	9987	11959	4472	438,6
	10	3772	4863	5008	5309	5886	8064	8764	10208	1132	111





	Lower heat exchangers surface [m²]
200	0,5
300	0,75
500	1,5
800	2
1000	3
1300	3
1500	3
2000	4
2500	5
3000	6
4000	8
5000	10

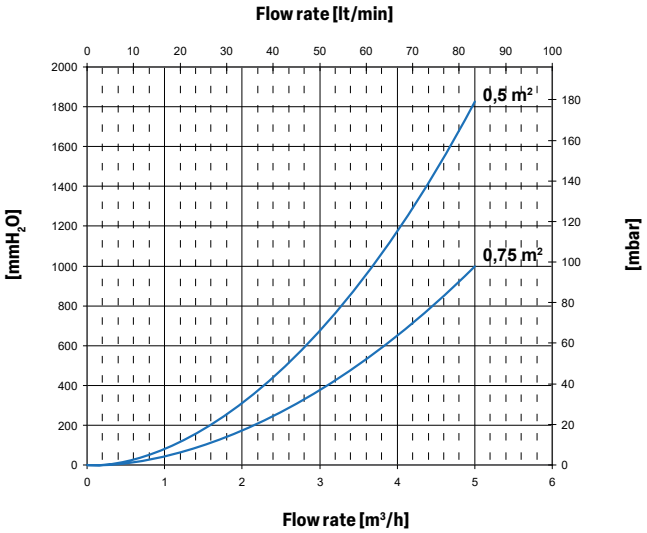

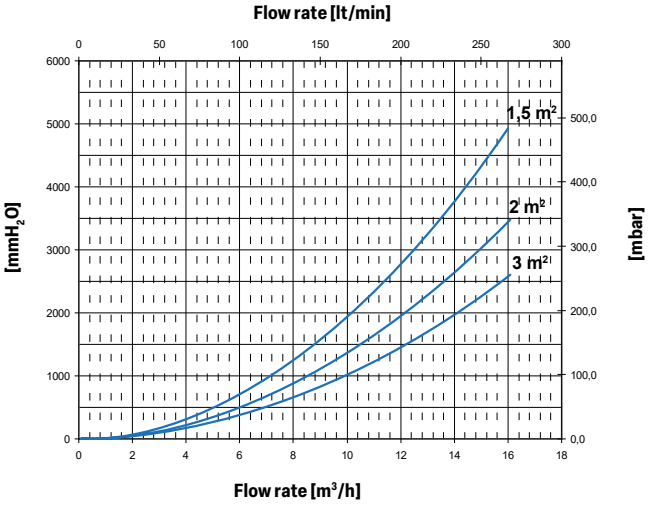

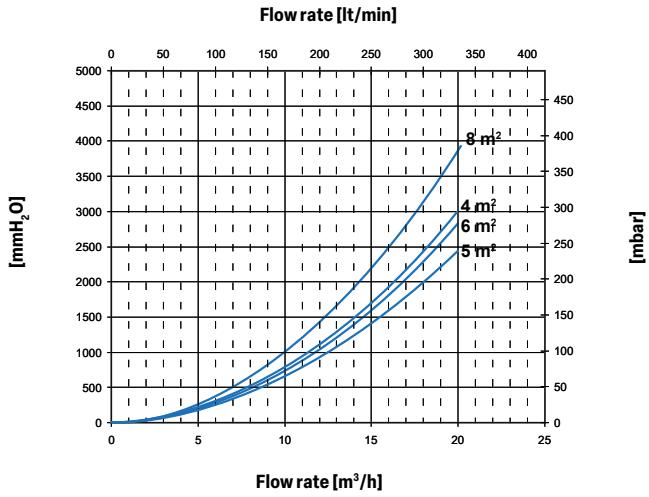

EXTRA **2 INOX**

HEAT EXCHANGERS PRESSURE DROP





Upper heat exchangers surface [m²]	
200	0,5
300	0,75
500	1,5
800	2
1000	2
1300	3
1500	3
2000	4
2500	5
3000	6
4000	8
5000	10

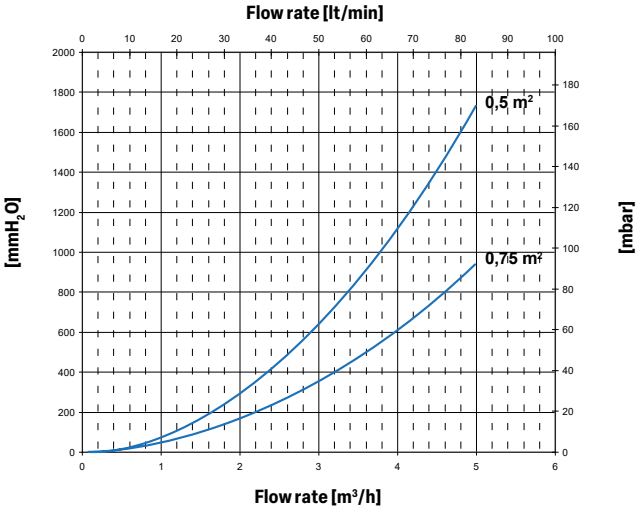

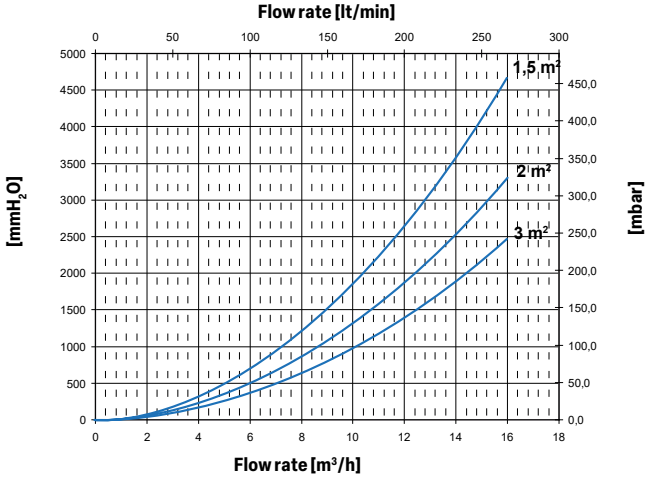

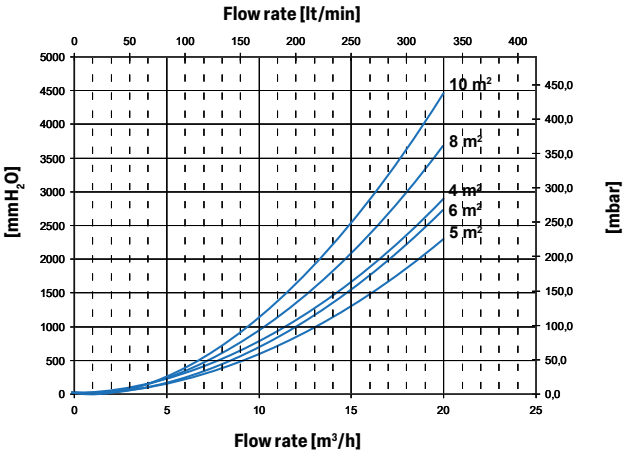

PERFORMANCE CHARTS AT PAGE 150-151

EXAMPLE OF INSTALLATION WITH **EXTRA 2 INOX**

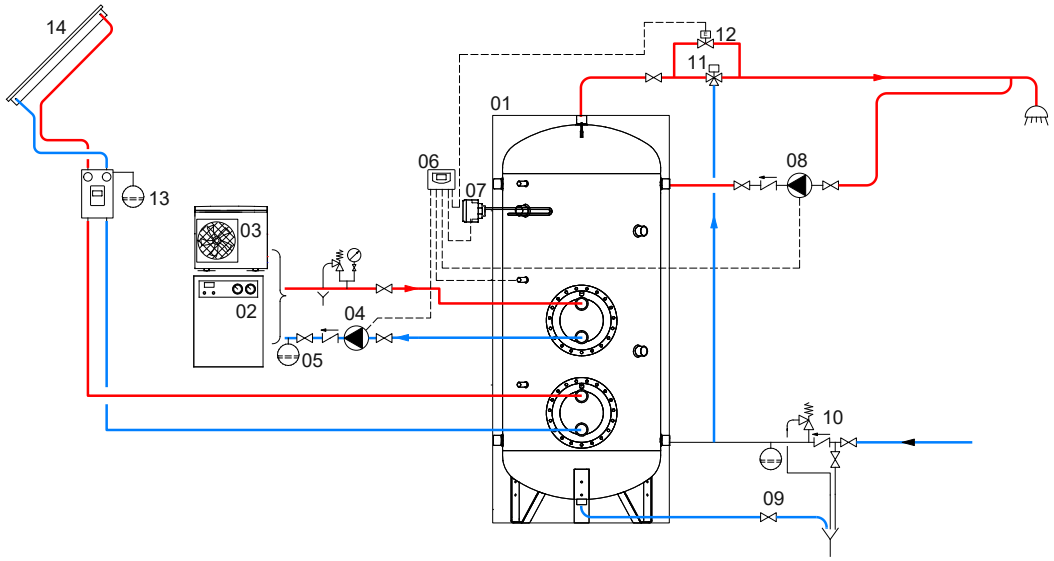

1	Extra 2 INOX	5	Expansion vessel	9	Blowdown valve	13	Solar system circulation group
2	Generator	6	FULL CONTROL electronic unit / thermostat	10	Hydraulic safety group	14	Solar panels
3	Generator (Heat pump)	7	Electric immersion heater (optional)	11	Thermostatic mixing valve		
4	Circulation group	8	D.H.W. recirculation group	12	By-pass solenoid valve		

The following schemes are purely illustrative. To realize the installation, always refer to a qualified technician.

EXTRA **2 INOX COMPACT**

STAINLESS STEEL 316L CALORIFIER, SUITABLE FOR LOW-CEILINGED ROOMS, WITH 2 EXTRACTABLE STAINLESS STEEL HEAT EXCHANGERS



APPLICATION
Production and storage of domestic hot water (DHW).
Suitable for low-ceilinged room.
MATERIAL
Stainless Steel 316 L suitable for domestic hot water
HEAT EXCHANGER
Nr. 2 stainless steel 316l antilegionella® heat exchangers (upper exchanger is straight and the lower is bent to the bottom).
INSULATION (DISMOUNTABLE)
NOFIRE® polyester fleece 100% made of recyclable material, with high thermal insulation. Fire resistance class B-s2d0 according to EN 13501. Grey PVC external lining.
CATHODE PROTECTION
Nr. 2 magnesium anodes.
DRAIN
External confluence through drain connection.
GASKET- FLANGE PLATE
Silicone gaskets suitable for water intended for human consumption (tested according to 98/83/CE); Mild steel exchanger head with anticorrosion treatment.
WARRANTY
5 years (See general sales conditions and warranty)
ACCESSORIES AND SPARE PARTS
See Accessories section for the entire list.

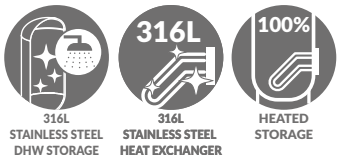

			Model	Art. Nr.	Heat exchangers surface Lower [m²]	Heat exchangers surface Upper [m²]
		**EXTRA 2 COMPACT XXC** DISMOUNTABLE SOFT FLEECE INSULATION	**2500**	3082052300211	5	5
			3000	3082052300213	6	6
			4000	3082052300215	8	8

ACCESSORIES

ELECTRIC IMMERSION HEATERS



Mod.	Heated volume by electric immersion heater [lt]	MONOPHASE 1,5 kW	MONOPHASE 2 kW	MONOPHASE 3 kW	THREEPHASE 4 kW	THREEPHASE 5 kW	THREEPHASE 6 kW	THREEPHASE 9 kW	THREEPHASE 12 kW
		5240000000051	5240000000052	5240000000053	5240000000047	5240000000048	5240000000049	5240000000050	5240000000031
		Ignition time from 10 °C to 45 °C with electric immersion heaters [min]			Ignition time from 10 °C to 45 °C with electric immersion heaters [min]				
2500	797	1428	1071	714	535	428	357	238	178
3000	874	1565	1173	782	587	469	391	261	196
4000	924	1655	1241	828	621	497	414	276	207

FULL CONTROL electronic unit (mounted on tank)

Art. Nr.	for models
5220280000004	XXC



Thermometer

Art. Nr.
5032240000107
5 units box



Titanium anode (for stainless steel calorifiers)

See Accessories section



Products designed and manufactured for using within temperature and pressure limits in accordance to Art. 4.3 Directive 2014/68/EU (P.E.D.)

EXTRA **2 INOX COMPACT**

STAINLESS STEEL 316L CALORIFIER, SUITABLE FOR LOW-CEILINGED ROOMS, WITH 2 EXTRACTABLE STAINLESS STEEL HEAT EXCHANGERS

STORAGE		HEAT EXCHANGER	
Pmax	Tmax	Pmax	Tmax
6 bar	95 °C	12 bar	110 °C

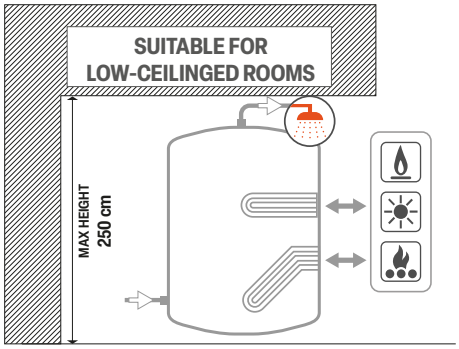

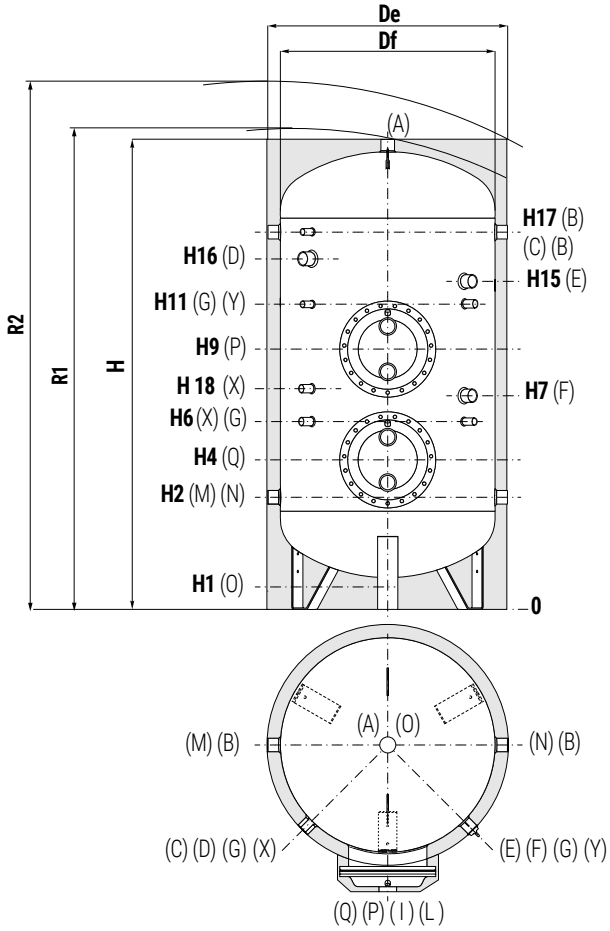

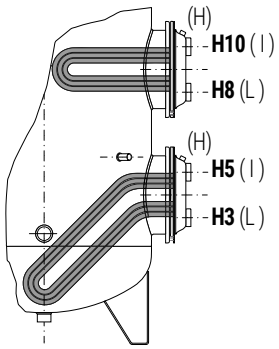

A	Domestic hot water outlet G 2" F
B	Recirculation / Domestic hot water outlet G 2" F
C	Connection for instrumentation G 1/2" F
D	Connection for electric immersion heater G 2" F
E	Connection for 2nd magnesium anode/ Titanium anode G 1"1/4 F
F	Connection for magnesium anode/Titanium anode G 1" 1/4 F
G	Connection for instrumentation G 1/2" F
H	Heat exchanger drain G 3/8" F
I	Primary circuit inlet G 2" F
L	Primary circuit outlet G 2" F
M	Domestic cold water circuit inlet G 2" F
N	Alternative domestic cold water circuit inlet or connection for more tanks in series G 2" F
O	Drain G 1" F
P	Flange
X	Connection for titanium anode G 3/4" F
Y	Connection for titanium anode G 3/4" F (only 4000)

Model	Volume	Weight	Df	De	H	R1	R2	H1	H2	H3	H4	H5	H6
	[lt]	[kg]	[mm]										
2500	2635	450	1400	1500	2122	2251	2610	117	557	677	782	887	957
3000	3038	472	1500	1600	2131	2276	2670	106	556	736	841	946	956
4000	4002	620	1600	1700	2409	2555	2960	94	564	744	849	954	1024

Model	H7	H8	H9	H10	H11	H12	H15	H16	H17	H18	PQ
	[mm]										
2500	1077	1257	1362	1537	1432	1177	1552	1501	1657	1180	Øi350/Øe430
3000	1076	1256	1361	1466	1431	1176	1551	1500	1656	1180	Øi350/Øe430
4000	1144	1331	1436	1716	1611	1251	1809	1732	1904	1250	Øi350/Øe430

Net volume data according to EN 15332 available on product label.

Products designed and manufactured for using within temperature and pressure limits in accordance to Art. 4.3 Directive 2014/68/EU (P.E.D.)

EXTRA **2 INOX COMPACT**

HEAT EXCHANGERS TECHNICAL DATA



Cordivari heat exchangers, with tubes bent to the bottom, are able to heat the complete volume in an homogeneus way.
Energy storaging is therefore improved and ignition time data refer to the complete volume of the tank, while in traditional straight heat exchangers equipped calorifiers, a range between 9-17% of the volume remains cold.

UPPER HEAT EXCHANGER

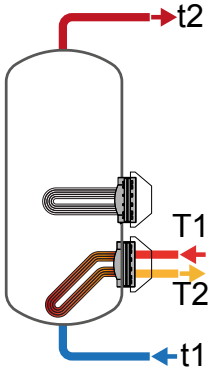

Model	Primary flow rate	Ignition time (minutes) from 10 °C to t2 and primary at T1				Maximum power exchange (kW) with primary at T1, secondary within 10-45 °C and constant use of DHW production				DHW continuous production lt/h within 10-45 °C and primary at T1HW production			
	[m³/h]	T1/t2				T1				T1			
		55/50	65/60	70/60	80/60	55	65	70	80	55	65	70	80
2500	20	118	119	81	51	84	134	160	216	2066	3309	3964	5352
	10	145	146	101	65	71	111	131	174	1755	2734	3244	4314
3000	20	128	127	87	55	100	159	190	255	2461	3926	4694	6321
	10	456	157	110	70	84	130	154	204	2082	3224	3817	5053
4000	20	126	127	87	56	131	207	247	330	3236	5121	6105	8168
	10	159	161	112	73	110	168	198	260	2718	4151	4903	6443

Model	Primary flow rate	DHW produced in the first 10 minutes in lt/10' input 10 °C output 45 °C, storage at t2 and primary at T1				DHW produced in the first hour in lt/60' input 10 °C output 45 °C, storage at t2 and primary at T1				Heat exchanger pressure drop	
	[m³/h]	T1/t2				T1/t2				[mmH$_2$O]	[mbar]
		55/50	65/60	70/60	80/60	55/50	65/60	70/60	80/60		
2500	20	2988	3856	3965	4196	4296	5951	6475	7586	2436	238,9
	10	2936	3760	3845	4023	4047	5491	5899	6755	624	61,2
3000	20	3748	4827	4955	5226	5307	7314	7928	9230	2836	278,1
	10	3685	4710	4809	5015	5004	6752	7226	8215	723	70,9
4000	20	4842	6232	6396	6740	6892	9475	10263	11913	3896	382,1
	10	4756	6070	6196	6452	6477	8699	9301	10533	989	97

LOWER HEAT EXCHANGER

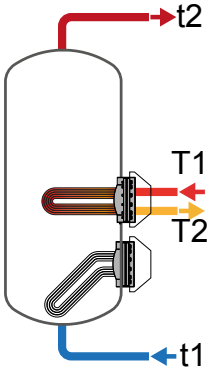

Model	Primary flow rate	Ignition time (minutes) from 10 °C to t2 and primary at T1				Maximum power exchange (kW) with primary at T1, secondary within 10-45 °C and constant use of DHW production				DHW continuous production lt/h within 10-45 °C and primary at T1HW production			
	[m³/h]	T1/t2				T1				T1			
		55/50	65/60	70/60	80/60	55	65	70	80	55	65	70	80
2500	20	59	59	40	25	84	134	160	216	2069	3313	3969	5358
	10	71	72	50	32	71	111	131	174	1758	2738	3249	4318
3000	20	71	72	49	31	100	159	190	255	2465	3931	4698	6325
	10	88	89	62	40	84	130	154	204	2086	3229	3821	5057
4000	20	71	72	50	32	131	207	247	330	3242	5126	6112	8179
	10	89	90	63	41	110	168	198	260	2723	4167	4909	6448

Model	Primary flow rate	DHW produced in the first 10 minutes in lt/10' input 10 °C output 45 °C, storage at t2 and primary at T1				DHW produced in the first hour in lt/60' input 10 °C output 45 °C, storage at t2 and primary at T1				Heat exchanger pressure drop	
	[m³/h]	T1/t2				T1/t2				[mmH$_2$O]	[mbar]
		55/50	65/60	70/60	80/60	55/50	65/60	70/60	80/60		
2500	20	1652	2186	2296	2527	2963	4285	4809	5921	2314	226,9
	10	1600	2091	2176	2354	2714	3825	4233	5089	592	58,1
3000	20	2303	3021	3149	3420	3865	5511	6124	7426	2745	269,2
	10	2240	2904	3003	3209	3561	4949	5423	6411	700	68,6
4000	20	2972	3894	4059	4403	5026	7141	7930	9583	3701	362,9
	10	2886	3735	3858	4115	4610	6374	6967	8198	939	92,1

EXTRA **2 INOX COMPACT**

HEAT EXCHANGERS PRESSURE DROP





Upper heat exchangers surface [m²]	
2500	5
3000	6
4000	8

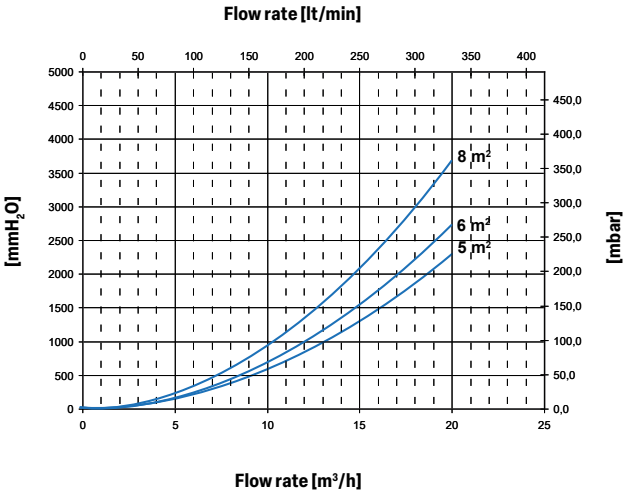



Lower heat exchangers surface [m²]	
2500	5
3000	6
4000	8

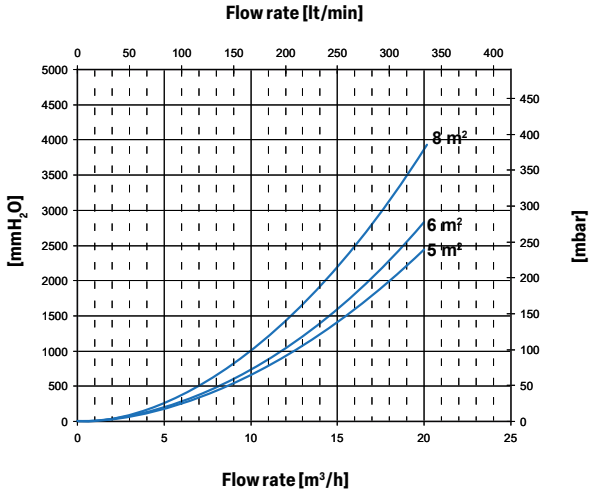

PERFORMANCE CHARTS AT PAGE 150-151

EXAMPLE OF INSTALLATION WITH **EXTRA 2 INOX COMPACT**

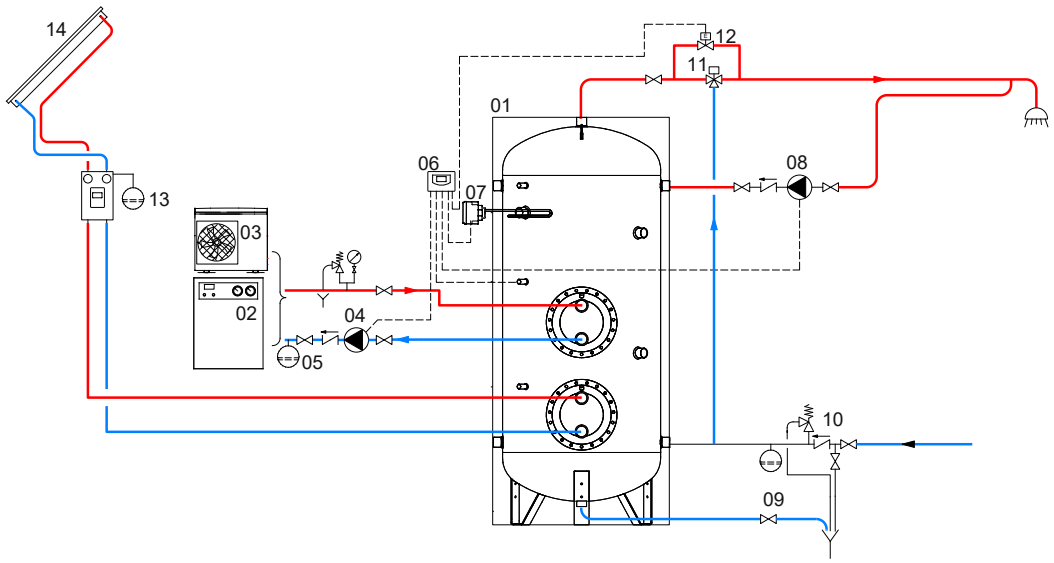

1	Extra 2 INOX COMPACT	5	Expansion vessel	9	Blowdown valve	13	Solar system circulation group
2	Generator	6	FULL CONTROL electronic unit / thermostat	10	Hydraulic safety group	14	Solar panels
3	Generator (Heat pump)	7	Electric immersion heater (optional)	11	Thermostatic mixing valve		
4	Circulation group	8	D.H.W. recirculation group	12	By-pass solenoid valve		

The following schemes are purely illustrative. To realize the installation, always refer to a qualified technician.

EXTRA **1 INOX STEAM**

STAINLESS STEEL 316L CALORIFIER WITH 1 EXTRACTABLE STAINLESS STEEL HEAT EXCHANGERS SPECIFIC FOR STEAM GENERATORS



316L STAINLESS STEEL DHW STORAGE

316L STAINLESS STEEL HEAT EXCHANGER

APPLICATION
Production and storage of domestic hot water. Suitable for steam generators.
MATERIAL
Stainless Steel 316 L suitable for domestic hot water
HEAT EXCHANGER
Stainless steel 316L straight heat exchanger suitable for steam power (P.E.D. directive compliant).
INSULATION
HARD: High thermal insulation with ecological polyurethane hard foam.
SOFT (DISMOUNTABLE): NOFIRE® polyester fleece 100% made of recyclable material, with high thermal insulation. Fire resistance class B-s2d0 according to EN 13501. Grey PVC external lining.

CATHODE PROTECTION
Magnesium anode. Models > 1500 Nr. 2 magnesium anodes.
DRAIN
External confluence through drain connection
GASKET- FLANGE PLATE
Asbestos-free fiber gaskets.
Mild steel exchanger head with anticorrosion treatment.
WARRANTY
5 years (See general sales conditions and warranty)
ACCESSORIES AND SPARE PARTS
See Accessories section for the entire list.

		Model	Art. Nr.	Heat exchangers surface [m²]	ErP ENERGY EFFICIENCY CLASS
		**EXTRA 1 VAPORE XXB** HARD FOAM INSULATION	**500**	3069052300123	1	**C**
		**EXTRA 1 VAPORE XXC** DISMOUNTABLE SOFT FLEECE INSULATION	**800**	3069052300134	1,5	**C**
			1000	3069052300139	2	**C**
			1300	3069052300136	3	**C**
			1500	3069052300137	3	**C**
			2000	3069052300138	3	**C**
			2500	3069052300109	3	
			3000	3069052300111	3	
			4000	3069052300113	4	
			5000	3069052300115	5	

HEAT EXCHANGERS FOR STEAM GENERATOR TECHNICAL DATA

Model	PED	Heat exchangers performance calculated with primary circuit at **6 bar** saturated steam and production of DHW from 10° to 45°C				Heat exchangers performance calculated with primary circuit at **3 bar** saturated steam and production of DHW from 10° to 45°C			
		Output	DHW production		Ignition time	Output	DHW production		Ignition time
		[KW]	[l/h]	[l/10']	[min]	[KW]	[l/h]	[l/10']	[min]
500	Art. 4.3	141	3464	1189	9	114	2793	1077	11
800	Cat. I	212	5196	1869	9	171	4189	1701	12
1000	Cat. I	282	6928	2463	9	227	5585	2239	11
1300	Cat. I	423	10393	3340	7	341	8378	3030	9
1500	Cat. I	423	10393	3554	9	341	8378	3218	11
2000	Cat. I	423	10393	4228	12	341	8378	3892	15
2500	Cat. I	423	10393	4571	13	341	8378	4235	17
3000	Cat. I	423	10393	5438	17	341	8378	5102	22
4000	Cat. I	564	13857	7031	17	455	11171	6583	21
5000	Cat. I	705	17321	9097	17	568	13963	8537	22

ACCESSORIES

FULL CONTROL electronic unit (mounted on tank)

Art. Nr.	for models
5220280000004	XXC
5220280000005	XXB



Thermometer

Art. Nr.
5032240000107
5 units box



Titanium anode (for stainless steel calorifiers)

See Accessories section



Products designed and manufactured for using within temperature and pressure limits in accordance to Art. 4.3 Directive 2014/68/EU (P.E.D.)

EXTRA **1 INOX STEAM**

STAINLESS STEEL 316L CALORIFIER WITH 1 EXTRACTABLE STAINLESS STEEL HEAT EXCHANGERS SPECIFIC FOR STEAM GENERATORS

STORAGE		HEAT EXCHANGER	
Pmax	Tmax	Pmax	Tmax
6 bar	95 °C	6 bar	165 °C

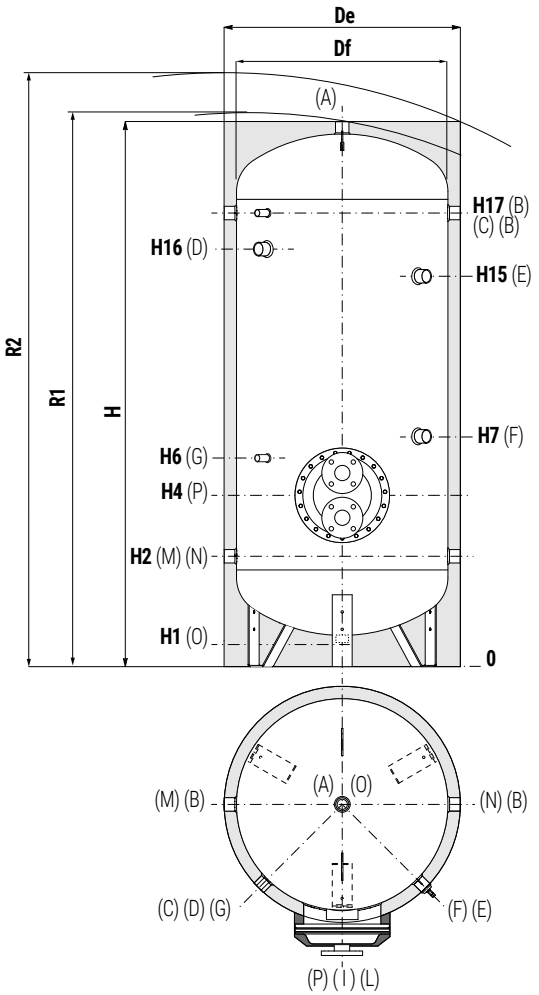

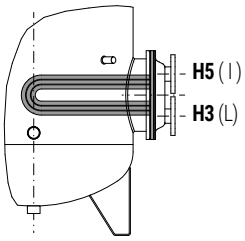

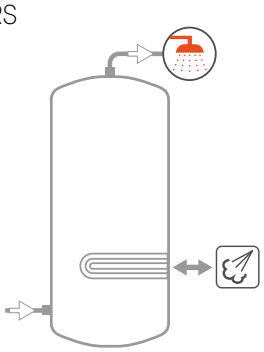

A	Domestic hot water outlet
B	Recirculation / Domestic hot water outlet
C	Connection for instrumentation G 1/2" F
D	Connection for electric immersion heater
E	Connection for 2nd magnesium anode/Titanium anode G 1"1/4 F (only for models > 1500)
F	Connection for magnesium anode/Titanium anode G 1" 1/4 F
G	Connection for instrumentation G 1/2" F
I	Steam circuit inlet DN50 PN16
L	Outlet for condense DN50 PN16
M	Domestic cold water circuit inlet
N	Alternative domestic cold water circuit inlet or connection for more tanks in series
O	Drain
P	Flange

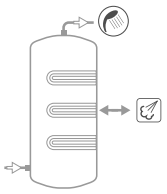

Models with 2 or 3 heat exchangers are available on request

Model	Volume	Weight	Df (vers. XXC)	De (vers. XXC)	De (vers. XXB)	H	R1	R2	H1	H2	H3	H4
	[lt]	[kg]	[mm]			[mm]						
500	504	99	//	//	750	1861	2006	2010	141	426	421	511
800	762	139	790	1010	//	1893	2008	2190	113	428	473	563
1000	905	161	790	1010	//	2212	2270	2440	112	437	482	572
1300	1277	204	950	1210	//	2193	2275	2510	118	433	478	568
1500	1403	209	1000	1260	//	2177	2266	2520	112	447	592	682
2000	2024	333	1250	1510	//	2099	2231	2590	134	529	664	754
2500	2320	398	1250	1350	//	2299	2396	2670	134	529	664	754
3000	2925	466	1250	1350	//	2799	2879	3110	134	529	664	754
4000	3776	570	1400	1500	//	2872	2968	3250	117	557	737	842
5000	4995	741	1600	1700	//	2909	3031	3370	94	564	639	789

Model	H5	H6	H7	H15	H16	H17	P	A	O	B M N	D
	[mm]							Connections F			
500	601	621	811	//	1380	1536	Øi220/Øe300	1"1/4	3/4"	1"1/4	1"1/2
800	653	713	863	//	1382	1538	Øi300/Øe380	1"1/2	3/4"	1"1/4	1"1/2
1000	662	722	922	//	1642	1797	Øi300/Øe380	1"1/2	3/4"	1"1/2	2"
1300	658	718	918	//	1638	1793	Øi300/Øe380	2"	1"	1"1/2	2"
1500	772	832	982	//	1602	1757	Øi300/Øe380	2"	1"	1"1/2	2"
2000	844	904	1004	1524	1473	1629	Øi300/Øe380	2"	1"	2"	2"
2500	844	904	954	1794	1710	1879	Øi300/Øe380	2"	1"	2"	2"
3000	844	904	1014	2294	2210	2369	Øi300/Øe380	2"	1"	2"	2"
4000	992	1017	1022	2302	2225	2397	Øi350/Øe430	2"	1"	2"	2"
5000	939	964	1019	2319	2159	2404	Øi350/Øe430	2"	1"	2"	2"

Net volume data according to EN 15332 available on product label.

Products designed and manufactured for using within temperature and pressure limits in accordance to Art. 4.3 Directive 2014/68/EU (P.E.D.)

VASO **INERZIALE INOX**

STAINLESS STEEL 316L DOMESTIC HOT WATER ACCUMULATION TANK



316L
STAINLESS STEEL
DHW STORAGE

APPLICATION
Domestic hot water storage.
MATERIAL
Stainless Steel 316 L suitable for domestic hot water
INSULATION
HARD: High thermal insulation with ecological polyurethane hard foam.
SOFT (DISMOUNTABLE): NOFIRE® polyester fleece 100% made of recyclable material, with high thermal insulation. Fire resistance class B-s2d0 according to EN 13501. Grey PVC external lining.
CATHODE PROTECTION
Magnesium anode - Models > 1500 Nr. 2 magnesium anodes.

DRAIN
External confluence through drain connection.
GASKET- FLANGE PLATE
Silicone gaskets suitable for water intended for human consumption (tested according to 98/83/CE); Stainless steel counterflange for inspection(>1000).
WARRANTY
5 years (See general sales conditions and warranty)
ACCESSORIES AND SPARE PARTS
See Accessories section for the entire list.

		Model	Art. Nr.	ENERGY EFFICIENCY CLASS
 	**VASO INERZIALE XB** HARD FOAM INSULATION	200	3060052140435	B
		300	3060052140436	B
		500	3060052140437	C
 	**VASO INERZIALE XC** DISMOUNTABLE SOFT FLEECE INSULATION	800	3060052140441	C
		1000	3060052140443	C
		1300	3060052140432	C
		1500	3060052140433	C
		2000	3060052140434	C
		2500	3060052140410	
		3000	3060052140412	
		4000	3060052140414	
		5000	3060052140416	

ACCESSORIES

ELECTRIC IMMERSION HEATERS

Mod.	Heated volume by electric immersion heater [lt]	MONOPHASE 1,5 kW	MONOPHASE 2 kW	MONOPHASE 3 kW	THREEPHASE 4 kW	THREEPHASE 5 kW	THREEPHASE 6 kW	THREEPHASE 9 kW	THREEPHASE 12 kW
		5240000000051	5240000000052	5240000000053	5240000000047	5240000000048	5240000000049	5240000000050	5240000000031
		Ignition time from 10 °C to 45 °C with electric immersion heaters [min]			Ignition time from 10 °C to 45 °C with electric immersion heaters [min]				
200	49	87	65	44	33	//	//	//	//
300	76	136	102	68	51	//	//	//	//
500	127	228	171	114	85	68	57	//	//
800	178	318	239	159	120	96	80	//	//
1000	243	436	327	218	163	131	109	73	54
1300	274	450	340	230	194	155	129	86	65
1500	288	516	387	258	297	238	198	132	99
2000	443	793	595	396	387	310	258	172	129
2500	577	1033	775	517	387	310	258	172	129
3000	577	1033	775	517	535	428	357	238	178
4000	797	1428	1071	714	699	559	466	311	233
5000	1040	1864	1398	932	699	559	466	311	233

FULL CONTROL electronic unit (mounted on tank)

Art. Nr.	for models
5220280000004	XC
5220280000005	XB



Thermometer

Art. Nr.
5032240000107
5 units box



Titanium anode (for stainless steel calorifiers)

See Accessories section



Products designed and manufactured for using within temperature and pressure limits in accordance to Art. 4.3 Directive 2014/68/EU (P.E.D.)

VASO **INERZIALE INOX**

STAINLESS STEEL 316L DOMESTIC HOT WATER ACCUMULATION TANK

STORAGE	
Pmax	Tmax
6 bar	95 °C

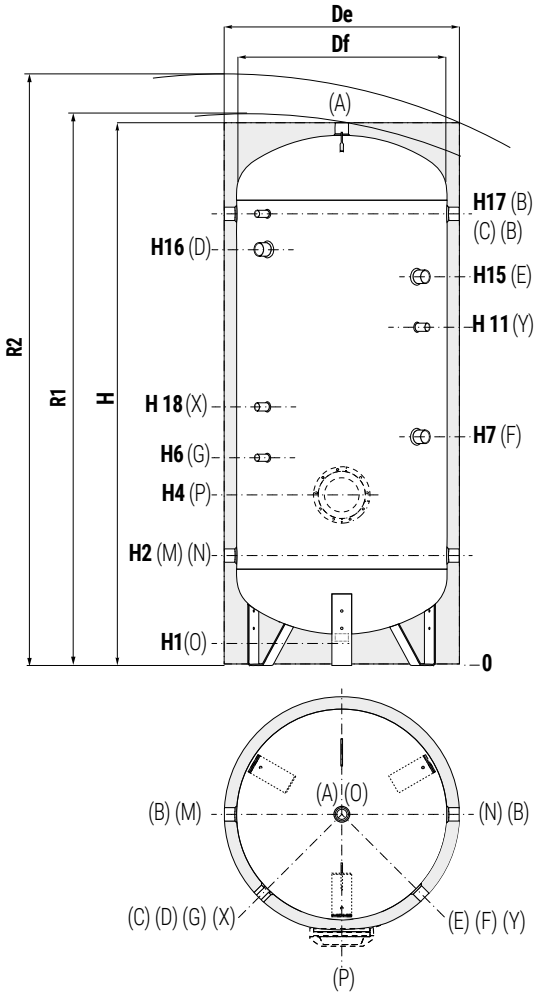

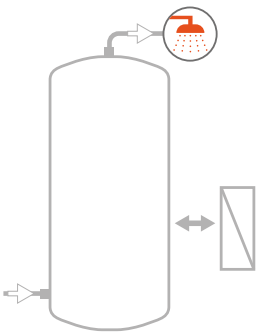

COMPLETE YOUR SYSTEM WITH THE NEW PRS MODULE *(FOR IMMEDIATE DHW PREPARATION)*



SEE HYDRONIC SECTION

A	Domestic hot water outlet
B	Recirculation / Domestic hot water outlet
C	Connection for instrumentation G 1/2" F
D-L	Connection for electric immersion heater
E	Connection for 2nd magnesium anode/Titanium anode G 1"1/4 F (only for models > 1500)
F	Connection for magnesium anode/ Titanium anode G 1" 1/4 F
G	Connection for instrumentation G 1/2" F
M	Domestic cold water circuit inlet
N	Alternative domestic cold water circuit inlet or connection for more tanks in series
O	Drain
P	Flange (>1000)
X	Connection for titanium anode G 3/4" F (>1500)
Y	Connection for titanium anode G 3/4" F (> 3000)

Model	Volume	Weight	Df (vers. XC)	De (vers. XC)	De (vers. XB)	H	R1	R2	H1	H2	H4	H6	H7
	[lt]	[kg]	[mm]						[mm]				
200	191	45	//	//	550	1451	-	1560	81	316	341	511	701
300	293	52	//	//	650	1569	-	1700	149	409	434	604	794
500	502	71	//	//	750	1861	-	2010	141	426	451	621	811
800	760	112	790	1010	//	1943	2040	2190	113	428	483	623	863
1000	902	148	790	1010	//	2212	2300	2440	112	437	492	632	922
1300	1274	151	950	1210	//	2193	2310	2510	118	433	488	628	918
1500	1399	181	1000	1260	//	2177	2310	2520	112	447	502	642	982
2000	2019	220	1250	1510	//	2099	2300	2590	134	529	574	714	1004
2500	2320	269	1250	1350	//	2299	2490	2670	134	529	574	714	954
3000	2925	315	1250	1350	//	2799	2960	3110	134	529	574	714	1014
4000	3776	665	1400	1500	//	2872	3060	3250	117	557	602	742	1022
5000	4995	558	1600	1700	//	2909	3150	3370	94	564	609	749	1019

Model	H11	H15	H16	H17	H18	P	O	MNB	CG	F	E	D-L	A
	[mm]						Connections F						
200	//	//	1066	1176	//	//	3/4"	1"1/4	1/2"	1"1/4	//	1"1/2	1"1/4
300	//	//	1159	1269	//	//	3/4"	1"1/4	1/2"	1"1/4	//	1"1/2	1"1/4
500	//	//	1380	1536	//	//	3/4"	1"1/4	1/2"	1"1/4	//	1"1/2	1"1/4
800	//	//	1382	1538	//	//	3/4"	1"1/4	1/2"	1"1/4	//	1"1/2	1"1/2
1000	//	//	1642	1797	//	//	3/4"	1"1/2	1/2"	1"1/4	//	2"	1"1/2
1300	//	//	1638	1793	//	Øi170/Øe240	1"	1"1/2	1/2"	1"1/4	//	2"	2"
1500	//	//	1602	1757	//	Øi170/Øe240	1"	1"1/2	1/2"	1"1/4	1"1/4	2"	2"
2000	//	1524	1473	1629	1159	Øi170/Øe240	1"	2"	1/2"	1"1/4	1"1/4	2"	2"
2500	//	1794	1710	1879	1179	Øi170/Øe240	1"	2"	1/2"	1"1/4	1"1/4	2"	2"
3000	//	2294	2210	2369	1279	Øi170/Øe240	1"	2"	1/2"	1"1/4	1"1/4	2"	2"
4000	1657	2302	2225	2397	1307	Øi170/Øe240	1"	2"	1/2"	1"1/4	1"1/4	2"	2"
5000	1664	2319	2159	2404	1314	Øi170/Øe240	1"	2"	1/2"	1"1/4	1"1/4	2"	2"

Net volume data according to EN 15332 available on product label.

Products designed and manufactured for using within temperature and pressure limits in accordance to Art. 4.3 Directive 2014/68/EU (P.E.D.)

VASO **INERZIALE INOX M1**

STAINLESS STEEL 316L DOMESTIC HOT WATER ACCUMULATION TANK WITH M1-CLASS INSULATION



NEW

316L
STAINLESS STEEL
DHW STORAGE

APPLICATION
Domestic hot water storage.
MATERIAL
Stainless Steel 316 L suitable for domestic hot water
INSULATION
M1-class polyester fibre insulation with high thermal performance (EN 13501), also applied to the manhole flange.
Grey PVC external lining.
CATHODE PROTECTION
Magnesium anode. Models > 1500 Nr. 2 magnesium anodes.

DRAIN
External confluence through drain connection.
GASKET- FLANGE PLATE
Silicone gaskets suitable for water intended for human consumption (tested according to 98/83/CE), max temperature up to 200°C. Stainless steel counterflange for inspection.
WARRANTY
5 years (See general sales conditions and warranty)
ACCESSORIES AND SPARE PARTS
See Accessories section for the entire list.

		Model	Art. Nr.	ErP ENERGY EFFICIENCY CLASS
 	**VASO INERZIALE XC M1** DISMOUNTABLE SOFT FLEECE INSULATION	**300**	3060052140253	**C**
		500	3060052140254	**C**
		800	3060052140255	**C**
		1000	3060052140266	**C**
		1500	3060052140257	**C**
		2000	3060052140258	**C**
		2500	3060052140259	
		3000	3060052140260	
		5000	3060052140261	
COMPACT MODELS 	 **VASO INERZIALE XC M1** DISMOUNTABLE SOFT FLEECE INSULATION	**2500**	3060052140262	
		3000	3060052140263	
		4000	3060052140264	

ACCESSORIES

ELECTRIC IMMERSION HEATERS

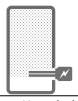

Mod.	Heated volume by electric immersion heater [lt]	**5** kW	**6** kW	**9** kW	**12** kW
		5240000000048	5240000000049	5240000000050	5240000000031
		Ignition time from 10 °C to 45 °C with electric immersion heaters [min]			
800	640	344	287	//	//
1000	718	386	322	214	161
1500	1031	554	462	308	231
2000	1345	723	602	402	301
2500	1652	888	740	493	370
3000	2266	1217	1014	676	507
4000	2810	1510	1258	839	629
5000	3814	2049	1708	1138	854

FULL CONTROL electronic unit (mounted on tank)

Art. Nr.	for models
5220280000004	WC
5220280000005	WB



HEAT MANAGER + electric immersion heater 1,5 kW + probe +3m cable

Art. Nr.	Output [kW]
5240000000074	1,5
5240000000075	2
5240000000076	3



Titanium anode

See Accessories section



Products designed and manufactured for using within temperature and pressure limits in accordance to Art. 4.3 Directive 2014/68/EU (P.E.D.)

VASO **INERZIALE INOX M1**

STAINLESS STEEL 316L DOMESTIC HOT WATER ACCUMULATION TANK WITH M1-CLASS INSULATION

STORAGE	
Pmax	Tmax
7 bar	95 °C

COMPLETE YOUR SYSTEM WITH THE NEW PRS MODULE *(FOR IMMEDIATE DHW PREPARATION)*

SEE HYDRONIC SECTION



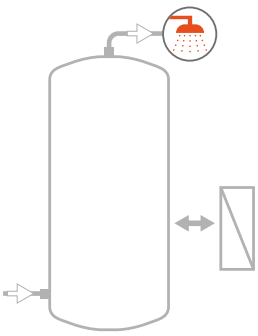

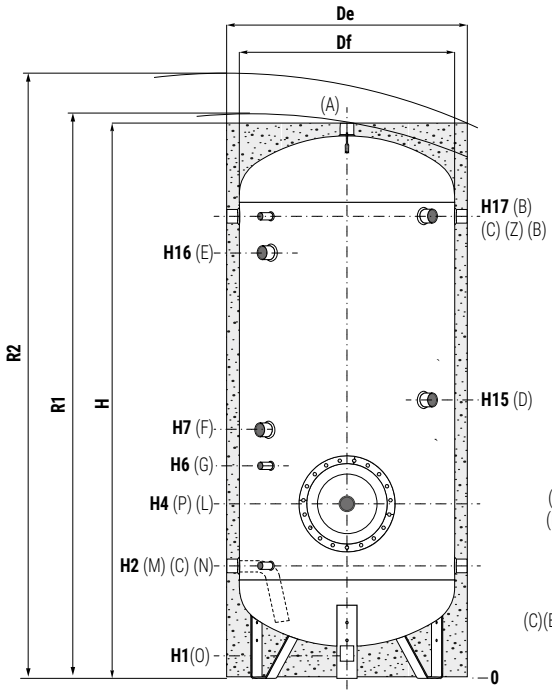

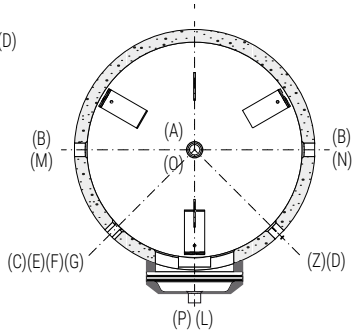

A	Domestic hot water outlet
B	Recirculation / Domestic hot water outlet
C-G	Connection for instrumentation G 1/2" F
D	Connection for electric immersion heater
E	Connection for 2nd magnesium anode G 1"1/4 F (only for models > 1500)
F	Connection for magnesium anode G 1" 1/4 F
L	Connection for instrumentation
M	Domestic cold water circuit inlet
N	Alternative domestic cold water circuit inlet or connection for more tanks in series
O	Drain
P	Flange
Z	Connection for electric immersion heater G 1" 1/2 F

	Model	Volume	Weight	Df	De	H	R1	R2	H1	H2	H4
		[lt]	[kg]	[mm]							
	300	289	81	550	770	1619	1630	1800	149	409	494
	500	501	108	650	870	1911	1925	2105	141	426	511
	800	789	155	750	970	2198	2210	2410	118	433	568
	1000	903	183	790	1010	2192	2210	2425	112	437	722
	1500	1421	304	1000	1260	2227	2285	2565	112	447	732
	2000	2005	374	1250	1510	2099	2140	2590	134	529	804
	2500	2308	396	1250	1470	2349	2385	2780	134	529	804
	3000	2913	469	1250	1470	2849	2865	3210	134	529	804
	5000	4975	740	1600	1820	2959	3010	3480	94	564	839
COMPACT MODELS	**2500**	2620	469	1400	1620	2175	2295	2720	117	557	832
	3000	3021	515	1500	1720	2190	2310	2790	106	556	831
	4000	3983	648	1600	1820	2465	2595	3070	94	564	839

	Model	H6	H7	H15	H16	H17	P	O	M-N-B	D	L	A
		[mm]						Connections F				
	300	604	744	844	//	1279	Øi220/Øe300	1"1/4	1"1/4	1"1/2	1"1/2	1"1/4
	500	621	891	991	//	1546	Øi220/Øe300	1"1/4	1"1/4	1"1/2	1"1/2	1"1/4
	800	718	1018	1118	//	1803	Øi300/Øe380	1"1/4	1"1/4	1"1/2	1"1/2	1"1/4
	1000	922	1122	1222	//	1807	Øi430/Øe512	1"1/2	1"1/2	2"1/2	2"1/2	1"1/2
	1500	932	1132	1232	//	1817	Øi430/Øe512	1"	1"1/2	2"1/2	2"1/2	2"
	2000	1004	1154	1264	1479	1629	Øi430/Øe512	1"	2"	2"1/2	2"1/2	2"
	2500	1004	1199	1299	1654	1879	Øi430/Øe512	1"	2"	2"1/2	2"1/2	2"
	3000	1004	1354	1454	2154	2379	Øi430/Øe512	1"	2"	2"1/2	2"1/2	2"
	5000	1039	1339	1459	2189	2414	Øi430/Øe512	1"	2"	2"1/2	2"1/2	2"
COMPACT MODELS	**2500**	1032	1182	1282	1507	1657	Øi430/Øe512	1"	2"	2"1/2	2"1/2	2"
	3000	1031	1181	1281	1506	1656	Øi430/Øe512	1"	2"	2"1/2	2"1/2	2"
	4000	1039	1189	1309	1764	1914	Øi430/Øe512	1"	2"	2"1/2	2"1/2	2"

Net volume data according to EN 15332 available on product label.

Products designed and manufactured for using within temperature and pressure limits in accordance to Art. 4.3 Directive 2014/68/EU (P.E.D.)

VASO **STORAGE INOX A1**

STAINLESS STEEL 316L DOMESTIC HOT WATER ACCUMULATION TANK
WITH FIREPROOF INSULATION AND ALUMINIUM EXTERNAL COVER



APPLICATION
Domestic hot water storage.
MATERIAL
Stainless Steel 316 L suitable for domestic hot water
INSULATION (DISMOUNTABLE)
Complete fireproof class A1 insulation in compliance with EN 13501, consisting of:
- Glass fiber/rock wool high thermal insulation.
- Aluminium cover hinged and removable.
The models 3000-4000-5000 are supplied with non-assembled insulation.
CATHODE PROTECTION
Magnesium anode. Models > 1500 Nr. 2 magnesium anodes.

DRAIN
External confluence through drain connection.
GASKET- FLANGE PLATE
Silicone gaskets suitable for water intended for human consumption (tested according to 98/83/CE), max temperature up to 200°C. Stainless steel blind flange.
WARRANTY
5 years (See general sales conditions and warranty)
ACCESSORIES AND SPARE PARTS
See Accessories section for the entire list.

316L
STAINLESS STEEL
DHW STORAGE

		Model	Art. Nr.	ErP ENERGY EFFICIENCY CLASS
 	**VASO STORAGE A1 X** NON-REMOVABLE METALLIC COVER	**800**	3060052140330	**C**
		1000	3060052140335	**C**
		1500	3060052140332	**C**
		2000	3060052140333	**C**
 	**VASO STORAGE A1 X** REMOVABLE METALLIC COVER	**2500**	3060052140310	
		3000	3060052140312	
		5000	3060052140315	
 	**VASO STORAGE A1 X COMPACT** NON-REMOVABLE METALLIC COVER	**2500**	3060052140311	
		3000	3060052140313	
		4000	3060052140314	

ACCESSORIES

ELECTRIC IMMERSION HEATERS



Mod.	Heated volume by electric immersion heater [lt]	**5** kW	**6** kW	**9** kW	**12** kW
		5240000000048	5240000000049	5240000000050	5240000000031
		Ignition time from 10 °C to 45 °C with electric immersion heaters [min]			
800	640	344	287	//	//
1000	718	386	322	214	161
1500	1031	554	462	308	231
2000	1345	723	602	402	301
2500	1652	888	740	493	370
3000	2266	1217	1014	676	507
4000	2810	1510	1258	839	629
5000	3814	2049	1708	1138	854

Products designed and manufactured for using within temperature and pressure limits in accordance to Art. 4.3 Directive 2014/68/EU (P.E.D.)

VASO **STORAGE INOX A1**

STAINLESS STEEL 316L DOMESTIC HOT WATER ACCUMULATION TANK
WITH FIREPROOF INSULATION AND ALUMINIUM EXTERNAL COVER

STORAGE	
Pmax	Tmax
7 bar	95 °C

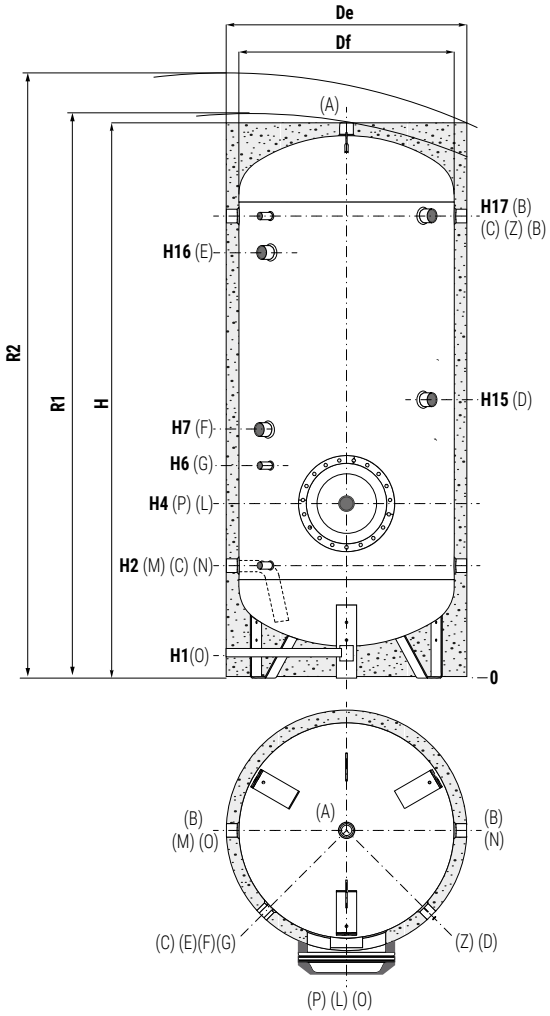

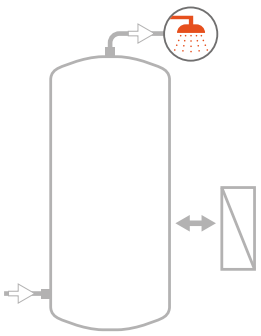

COMPLETE YOUR SYSTEM WITH THE NEW PRS MODULE *(FOR IMMEDIATE DHW PREPARATION)*



SEE HYDRONIC SECTION

A	Domestic hot water outlet
B	Backflow external heat exchanger / Recirculation
C-G	Connection for instrumentation G 1/2" F
D-L	Connection for electric immersion heater
E	Connection for 2nd magnesium anode G 1" 1/4 F (Models >1500)
F	Connection for magnesium anode G 1" 1/4 F
M	Domestic cold water circuit inlet
N	Delivery to external heat exchanger
O	Drain
P	Flange for inspection
Z	Connection for electric immersion heater G 1" 1/2 F

	Model	Volume	Weight	Df	De	H	R1	R2	H1	H2	H4
		[lt]	[kg]	[mm]							
	800	793	161	750	950	2188	//	2390	89	433	568
	1000	112	191	790	990	2188	//	2430	84	437	722
	1500	1427	312	1000	1200	2228	//	2530	74	447	732
	2000	2017	374	1250	1450	2111	//	2560	96	529	804
	2500	2319	443	1250	1450	2361	2670	2770	96	529	804
	3000	2925	477	1250	1450	2861	3120	3210	96	529	804
	5000	4995	755	1600	1800	2965	3370	3470	56	564	839
Compact models	**2500**	2635	469	1400	1600	2175	2590	2700	79	557	832
Compact models	**3000**	3039	515	1500	1700	2190	2660	2770	106	556	831
Compact models	**4000**	4002	648	1600	1800	2465	2940	3050	56	564	839

	Model	H6	H7	H15	H16	H17	P	O	M-N-B	D-L	A
		[mm]						Connections F			
	800	718	1018	1118	//	1793	Øi300/Øe380	1"1/4	1"1/4	1"1/2	1"1/4
	1000	922	1122	1222	//	1743	Øi430/Øe512	1"1/2	1"1/2	2"1/2	1"1/2
	1500	932	1132	1232	//	1807	Øi430/Øe512	1"	1"1/2	2"1/2	2"
	2000	1004	1154	1264	1469	1619	Øi430/Øe512	1"	2"	2"1/2	2"
	2500	1004	1199	1299	1644	1869	Øi430/Øe512	1"	2"	2"1/2	2"
	3000	1004	1354	1454	2144	2369	Øi430/Øe512	1"	2"	2"1/2	2"
	5000	1039	1339	1459	2179	2404	Øi430/Øe512	1"	2"	2"1/2	2"
Compact models	**2500**	1032	1182	1282	1507	1657	Øi430/Øe512	1"	2"	2"1/2	2"
Compact models	**3000**	1031	1181	1281	1506	1656	Øi430/Øe512	1"	2"	2"1/2	2"
Compact models	**4000**	1039	1189	1309	1764	1914	Øi430/Øe512	1"	2"	2"1/2	2"

Net volume data according to EN 15332 available on product label.

Products designed and manufactured for using within temperature and pressure limits in accordance to Art. 4.3 Directive 2014/68/EU (P.E.D.)

VASO **STORAGE INOX COMPACT**

STAINLESS STEEL 316L DOMESTIC HOT WATER ACCUMULATION TANK
SUITABLE FOR LOW-CEILINGED ROOMS WITH 1 BLIND FLANGE



APPLICATION
Domestic hot water storage.
Suitable for low-ceilinged room.
MATERIAL
Stainless Steel 316 L suitable for domestic hot water
INSULATION (DISMOUNTABLE)
NOFIRE® polyester fleece 100% made of recyclable material, with high thermal insulation. Fire resistance class B-s2d0 according to EN 13501. Grey PVC external lining.
CATHODE PROTECTION
Nr. 2 magnesium anodes.

DRAIN
External confluence through drain connection.
GASKET- FLANGE PLATE
Silicone gaskets suitable for water intended for human consumption (tested according to 98/83/CE); Stainless steel blind flange.WARRANTY 5 years (See general sales conditions and warranty)
ACCESSORIES AND SPARE PARTS
See Accessories section for the entire list.

316L
STAINLESS STEEL
DHW STORAGE

			Model	Art. Nr.
		**EXTRA 2 COMPACT XXC** DISMOUNTABLE SOFT FLEECE INSULATION	**2500**	3060052140411
			3000	3060052140413
			4000	3060052140415

ACCESSORIES

ELECTRIC IMMERSION HEATERS

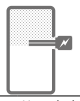

Mod.	Heated volume by electric immersion heater [lt]	MONOPHASE			THREEPHASE				
		1,5 kW	**2** kW	**3** kW	**4** kW	**5** kW	**6** kW	**9** kW	**12** kW
		5240000000051	5240000000052	5240000000053	5240000000047	5240000000048	5240000000049	5240000000050	5240000000031
		Ignition time from 10 °C to 45 °C with electric immersion heaters [min]			Ignition time from 10 °C to 45 °C with electric immersion heaters [min]				
2500	797	1428	1071	714	535	428	357	238	178
3000	874	1565	1173	782	587	469	391	261	196
4000	924	1655	1241	828	621	497	414	276	207

FULL CONTROL electronic unit (mounted on tank)

Art. Nr.	for models	
5220280000004	XC	

Titanium anode (for stainless steel calorifiers)

See Accessories section	

Products designed and manufactured for using within temperature and pressure limits in accordance to Art. 4.3 Directive 2014/68/EU (P.E.D.)

VASO **STORAGE INOX COMPACT**

STAINLESS STEEL 316L DOMESTIC HOT WATER ACCUMULATION TANK
SUITABLE FOR LOW-CEILINGED ROOMS WITH 1 BLIND FLANGE

STORAGE	
Pmax	Tmax
6 bar	95 °C

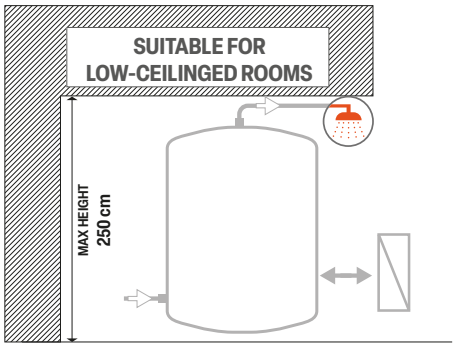

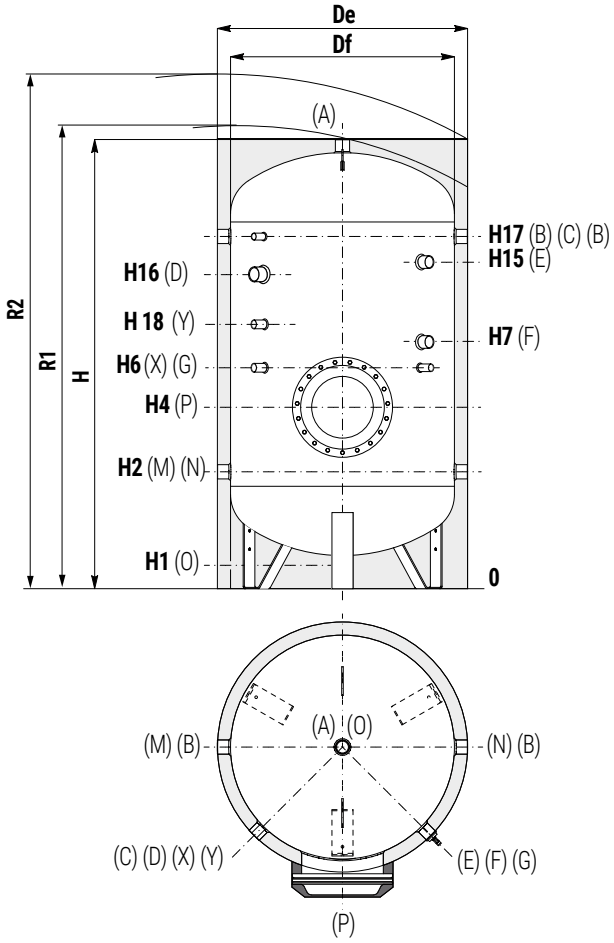

A	Domestic hot water outlet G 2" F
B	Recirculation / Domestic hot water outlet G 2" F
C	Connection for instrumentation G 1/2" F
D	Connection for electric immersion heater G 2" F
E	Connection for 2nd magnesium anode/Titanium anode G 1"1/4 F
F	Connection for magnesium anode/Titanium anode G 1" 1/4 F
G	Connection for instrumentation G 1/2" F
M	Domestic cold water circuit inlet G 2" F
N	Alternative domestic cold water circuit inlet or connection for more tanks in series G 2" F
O	Drain G 1" F
P	Flange
X	Connection for titanium anode G 3/4" F
Y	Connection for titanium anode G 3/4" F (Only 4000)

COMPLETE YOUR SYSTEM WITH THE NEW PRS MODULE *(FOR IMMEDIATE DHW PREPARATION)*



SEE HYDRONIC SECTION

Model	Volume	Weight	Df	De	H	R1	R2	H1	H2	H4	H6	H7
	[lt]	[kg]	[mm]									
2500	2635	269	1400	1500	2122	2542	2600	117	557	602	742	982
3000	3038	315	1500	1600	2131	2606	2670	106	556	601	741	981
4000	4002	665	1600	1700	2409	2892	2950	94	564	609	749	1029

Model	H15	H16	H17	H18	P
	[mm]				
2500	1552	1501	1657	//	Øi170/Øe240
3000	1551	1500	1656	//	Øi170/Øe240
4000	1809	1732	1904	1261	Øi170/Øe240

Net volume data according to EN 15332 available on product label.

Products designed and manufactured for using within temperature and pressure limits in accordance to Art. 4.3 Directive 2014/68/EU (P.E.D.)

BOLLY® 1 ST INOX

STAINLESS STEEL 316L DOMESTIC HOT WATER CALORIFIER
WITH 1 FIXED STAINLESS STEEL HEAT EXCHANGER



APPLICATION
Production and storage of domestic hot water (DHW).
All the connections are aligned on the front and on the back for quick and easy installation.

MATERIAL
Stainless Steel 316 L suitable for domestic hot water

HEAT EXCHANGER
Nr. 1 fixed stainless steel 316L heat exchanger.

INSULATION
HARD: High thermal insulation with ecological polyurethane hard foam.
SOFT (DISMOUNTABLE): NOFIRE® polyester fleece 100% made of recyclable material, with high thermal insulation. Fire resistance class B-s2d0 according to EN 13501. Grey PVC external lining.

CATHODE PROTECTION
Magnesium anode - Models > 800 Nr. Nr. 2 magnesium anodes.

DRAIN
External confluence through drain connection

GASKET- FLANGE PLATE
Silicone gaskets suitable for water intended for human consumption (tested according to 98/83/CE); Stainless steel blind flange.

WARRANTY
5 years (See general sales conditions and warranty)

ACCESSORIES AND SPARE PARTS
See Accessories section for the entire list.

316L STAINLESS STEEL DHW STORAGE | 316L STAINLESS STEEL HEAT EXCHANGER | FRONT/BACK ALIGNED CONNECTIONS | PROMPT AVAILABILITY

		Model	Art. Nr.	Heat exchangers surface [m²]	ErP ENERGY EFFICIENCY CLASS
	**BOLLY® 1 ST XB** HARD FOAM INSULATION	**150**	3104052010001	0,6	**B**
		200	3104052010002	0,7	**B**
		300	3104052010003	1	**B**
		400	3104052010004	1,4	**B**
		500	3104052010005	1,7	**B**
	**BOLLY® 1 ST XC** DISMOUNTABLE SOFT FLEECE INSULATION	**800**	3103052010281	2,4	**C**
		1000	3103052010282	2,9	**C**
		1500	3103052010283	3,6	**C**
		2000	3103052010284	3,8	**C**

ACCESSORIES

ELECTRIC IMMERSION HEATERS

Mod.	Heated volume by electric immersion heater [lt]	MONOPHASE 1,5 kW	MONOPHASE 2 kW	MONOPHASE 3 kW	THREEPHASE 4 kW	THREEPHASE 5 kW	THREEPHASE 6 kW	THREEPHASE 9 kW	THREEPHASE 12 kW
		5240000000051	5240000000052	5240000000053	5240000000047	5240000000048	5240000000049	5240000000050	5240000000031
		Ignition time from 10 °C to 45 °C with electric immersion heaters [min]			Ignition time from 10 °C to 45 °C with electric immersion heaters [min]				
150	46	82	62	41	31	//	//	//	//
200	53	95	71	47	36	//	//	//	//
300	83	148	111	74	56	45	//	//	//
400	138	247	185	124	93	74	//	//	//
500	150	269	202	135	101	81	67	//	//
800	279	500	375	250	188	150	125	83	63
1000	381	682	511	341	256	205	170	114	85
1500	640	1147	860	573	430	344	287	191	143
2000	919	1646	1235	823	617	494	412	274	206

FULL CONTROL electronic unit (mounted on tank)

Art. Nr.	for models
5220280000004	XC
5220280000005	XB



HEAT MANAGER + electric immersion heater 1,5 kW + probe +3m cable

Art. Nr.	Output [kW]
5240000000074	1,5
5240000000075	2
5240000000076	3



Products designed and manufactured for using within temperature and pressure limits in accordance to Art. 4.3 Directive 2014/68/EU (P.E.D.)

BOLLY® 1 ST INOX

STAINLESS STEEL 316L DOMESTIC HOT WATER CALORIFIER
WITH 1 FIXED STAINLESS STEEL HEAT EXCHANGER

STORAGE		HEAT EXCHANGER	
Pmax	Tmax	Pmax	Tmax
6 bar	95 °C	12 bar	110 °C

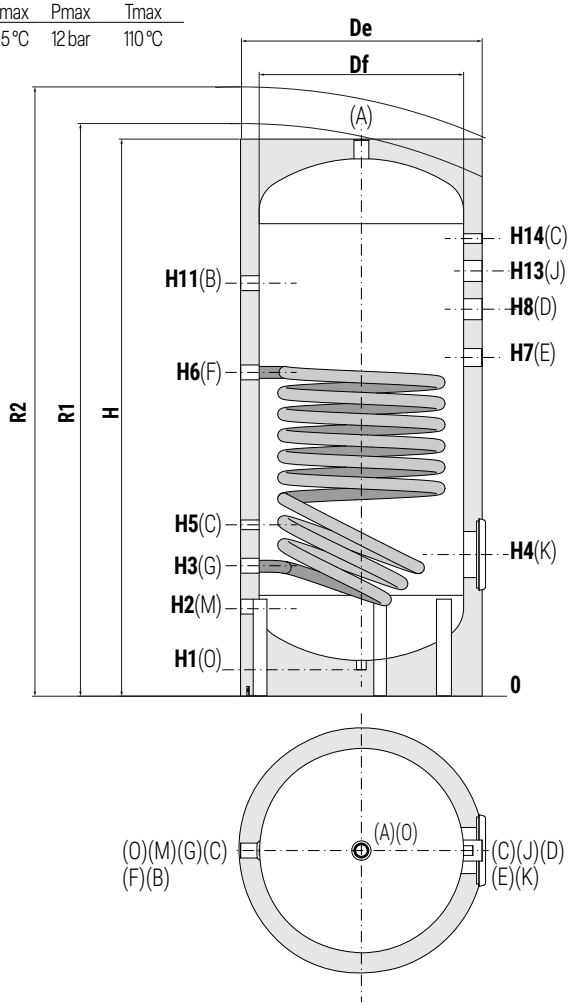

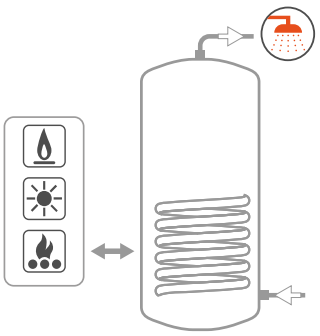

A	Domestic hot water outlet
B	Recirculation
C	Connection for instrumentation G 1/2" F
D	Connection for electric immersion heater
E	Connection for magnesium anode G 1"1/4 F
F	Primary circuit inlet G 1" F
G	Primary circuit outlet G 1" F
J	Connection for 2nd magnesium anode G 1"1/4 F (Models > 800)
K	Flange for inspection
M	Domestic cold water circuit inlet
O	Drain

BOLLY® 1 ST INOX - HARD FOAM INSULATION (XB)

Model	Volume	Weight	Df	De	H	R2	H1	H2	H3	H4	H5	H6	H7	H8	H11	H14
	[lt]	[kg]	[mm]													
150	150	31	400	500	1420	1510	65	200	310	310	420	799	830	960	1060	1180
200	192	35	450	550	1440	1540	65	210	320	320	430	847	880	1010	1094	1200
300	293	56	550	650	1495	1638	70	240	350	380	460	870	910	1040	1110	1230
400	425	73	600	700	1770	1907	65	250	360	390	470	1010	1040	1170	1325	1480
500	503	81	650	750	1796	1950	65	260	370	405	480	1060	1090	1220	1335	1490

Model	A	B	C	D	E	F	G	K	M	O
	Connections F									
150	1"	3/4"	1/2"	1"1/2	1"1/4	1"	1"	Øi120/Øe180	3/4"	1/2"
200	1"	3/4"	1/2"	1"1/2	1"1/4	1"	1"	Øi120/Øe180	3/4"	1/2"
300	1"	1"	1/2"	1"1/2	1"1/4	1"	1"	Øi120/Øe180	1"	1/2"
400	1"	1"	1/2"	1"1/2	1"1/4	1"	1"	Øi120/Øe180	1"	1/2"
500	1"	1"	1/2"	1"1/2	1"1/4	1"	1"	Øi120/Øe180	1"	1/2"

Net volume data according to EN 15332 available on product label.

BOLLY® 1 ST INOX - DISMOUNTABLE SOFT FLEECE INSULATION (XC)

Model	Volume	Weight	Df	De	H	R1	R2	H1	H2	H3	H4	H5	H6	H7	H8	H11	H13	H14
	[lt]	[kg]	[mm]															
800	759	140	790	990	1943	1968	2185	114	323	443	473	563	998	1033	1193	1413	//	1563
1000	902	160	790	990	2193	2231	2415	114	318	443	473	563	996	1047	1233	1493	1683	1813
1500	1398	238	1000	1240	2197	2260	2530	114	327	462	492	582	1012	1042	1182	1432	1652	1782
2000	2018	346	1250	1470	2070	2204	2555	85	350	485	515	605	939	965	1105	1305	1485	1605

Model	A	B	C	D	E	F	G	J	K	M	O
	Connections F										
800	1"1/4	1"	1/2"	1"1/2	1"1/4	1"1/4	1"1/4	//	Øi120/Øe180	1"	3/4"
1000	1"1/4	1"	1/2"	2"	1"1/4	1"1/4	1"1/4	1"1/4	Øi120/Øe180	1"	3/4"
1500	2"	2"	1/2"	2"	1"1/4	1"1/4	1"1/4	1"1/4	Øi170/Øe240	2"	1"
2000	2"	2"	1/2"	2"	1"1/4	1"1/4	1"1/4	1"1/4	Øi170/Øe240	2"	1"

Net volume data according to EN 15332 available on product label.

Products designed and manufactured for using within temperature and pressure limits in accordance to Art. 4.3 Directive 2014/68/EU (P.E.D.)

BOLLY® **1 ST INOX**

HEAT EXCHANGERS TECHNICAL DATA



Data have been calculated on following basis:
1) Primary circuit at T1 and proper energy source;
2) Production of DHW in continuous from 10 °C to t2;
3) DHW that can be taken in the first 10' and in the first hour from storage at t2, input 10 °C and output 45 °C;
4) Non-scaling sanitary water

LOWER
HEAT EXCHANGER

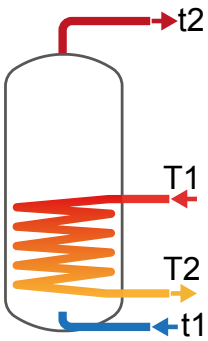

Model	Primary flow rate	Ignition time (minutes) from 10 °C to t2 and primary at T1				Maximum power exchange (kW) with primary at T1, secondary within 10-45 °C and constant use of DHW production				DHW continuous production lt/h within 10-45 °C and primary at T1HW production			
	[m³/h]	T1/t2				T1				T1			
		55/50	65/60	70/60	80/60	55	65	70	80	55	65	70	80
150	2	112	118	79	50	5,3	6,6	8,5	12,0	108	110	142	203
	1	128	135	89	57	4,9	6,2	7,9	11,0	100	102	131	185
200	2,5	111	116	79	51	6,7	8,4	10,8	15,2	139	141	182	259
	1,25	124	131	88	57	6,3	7,9	10,1	14,0	130	132	169	238
300	3	108	112	78	50	10,3	13,0	16,7	23,4	218	221	285	403
	1,5	121	127	87	57	9,7	12,3	15,6	21,6	206	209	266	371
400	3,5	115	120	83	55	13,9	17,6	22,5	31,5	297	301	386	544
	1,75	130	136	95	62	13,2	16,6	21,0	29,0	280	284	361	501
500	3,5	118	123	86	56	16,2	20,4	26,0	36,4	345	350	449	630
	1,75	135	141	99	65	15,2	19,3	24,3	33,4	325	330	418	577
800	6	121	126	89	58	23,3	29,3	37,4	52,2	500	506	647	906
	3	136	142	100	66	22,0	27,8	35,1	48,3	473	480	607	837
1000	6	127	132	93	61	26,6	33,4	42,6	59,3	571	578	738	1031
	3	144	150	106	70	25,1	31,7	39,8	54,6	539	547	690	948
1500	6	163	169	120	79	32,6	41,1	52,1	72,4	703	711	905	1259
	3	187	195	139	92	30,7	38,7	48,5	66,1	660	671	842	1149
2000	6	220	229	162	107	35,0	44,1	56,0	77,5	755	765	972	1349
	3	254	265	189	126	32,9	41,6	52,0	70,6	709	720	902	1228

Model	Primary flow rate	DHW produced in the first 10 minutes in lt/10' input 10 °C output 45 °C, storage at t2 and primary at T1				DHW produced in the first hour in lt/60' input 10 °C output 45 °C, storage at t2 and primary at T1				Heat exchanger pressure drop	
	[m³/h]	T1/t2				T1/t2				[mmH$_2$O]	[mbar]
		55/50	65/60	70/60	80/60	55/50	65/60	70/60	80/60		
150	2	188	231	237	247	257	258	284	333	213	21
	1	187	230	235	244	250	252	275	318	62	6
200	2,5	241	296	303	316	329	331	364	425	413	40
	1,25	240	295	301	313	322	324	353	409	120	12
300	3	371	455	466	486	509	512	563	657	782	77
	1,5	369	453	463	480	500	502	548	632	229	23
400	3,5	535	657	671	698	723	727	795	921	1345	132
	1,75	532	654	667	691	710	713	775	887	395	39
500	3,5	632	777	793	824	851	855	934	1079	1551	152
	1,75	629	774	788	815	835	839	909	1036	456	45
800	6	951	1169	1192	1235	1267	1272	1385	1592	1118	110
	3	946	1164	1185	1224	1246	1251	1353	1537	328	32
1000	6	1126	1385	1412	1460	1488	1493	1621	1856	1266	124
	3	1121	1380	1404	1447	1462	1468	1583	1789	375	36
1500	6	1715	2116	2148	2207	2160	2167	2322	2605	1542	151
	3	1708	2109	2137	2189	2126	2135	2271	2517	454	45
2000	6	2432	3010	3045	3108	2910	2918	3084	3385	1653	162
	3	2424	3003	3033	3088	2873	2882	3028	3289	487	48

HEAT EXCHANGERS PRESSURE DROP (LOWER)

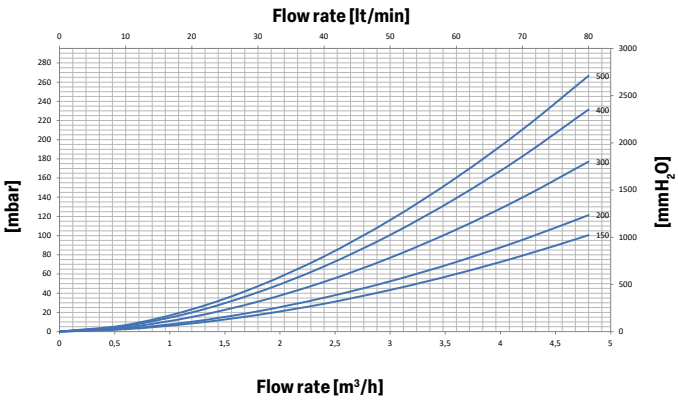

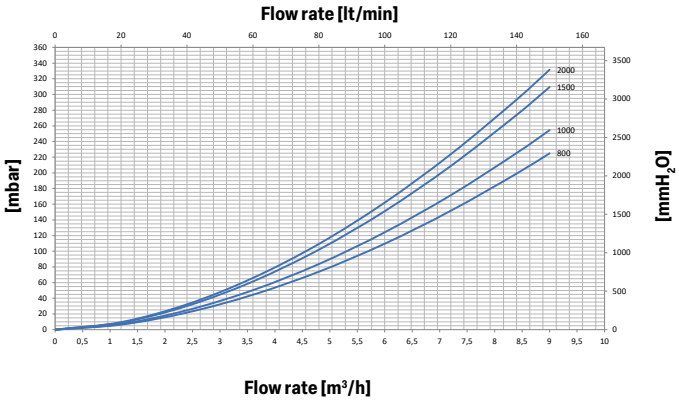

BOLLY® **1 ST INOX**

HEAT EXCHANGERS TECHNICAL DATA



Heat Exchanger output referred to temperature and flow rate of primary circuit and with secondary at 10/45°C at maximum withdrawal of producible DHW (Upper limit of the curves referred to maximum primary flow rate in the heat exchanger, while the lower limit in the curves refer to the minimum primary flow rate).

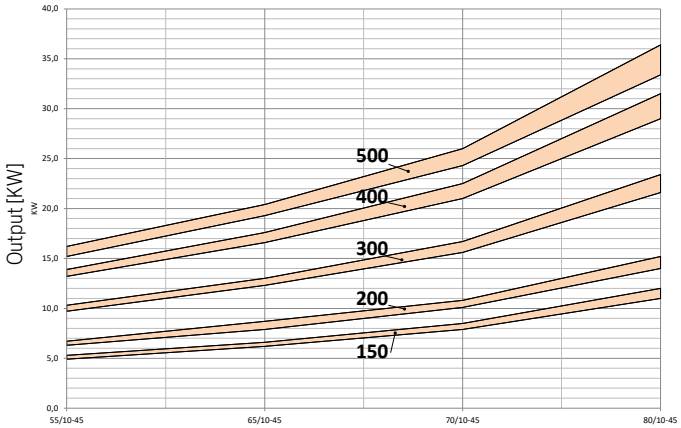

Primary circuit temperature [°C]

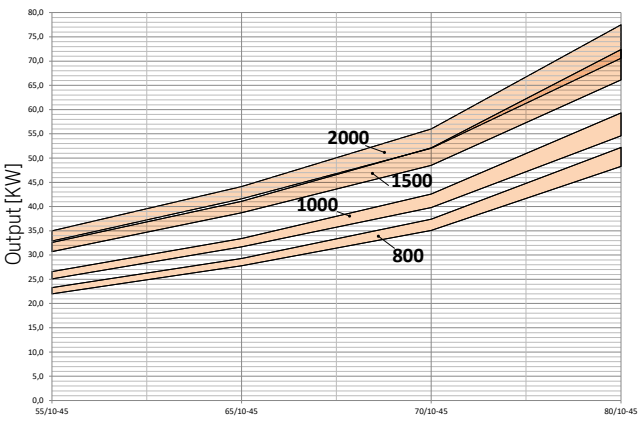

Primary circuit temperature [°C]

Model	150		200		300		400		500	
Flow rate [m³/h]	MAX	MIN	MAX	MIN	MAX	MIN	MAX	MIN	MAX	MIN
	2	1	2,5	1,25	3	1,5	3,5	1,75	3,5	1,75

Model	800		1000		1500		2000	
Flow rate [m³/h]	MAX	MIN	MAX	MIN	MAX	MIN	MAX	MIN
	6	3	6	3	6	3	6	3

EXAMPLE OF INSTALLATION WITH **BOLLY® 1 ST INOX**

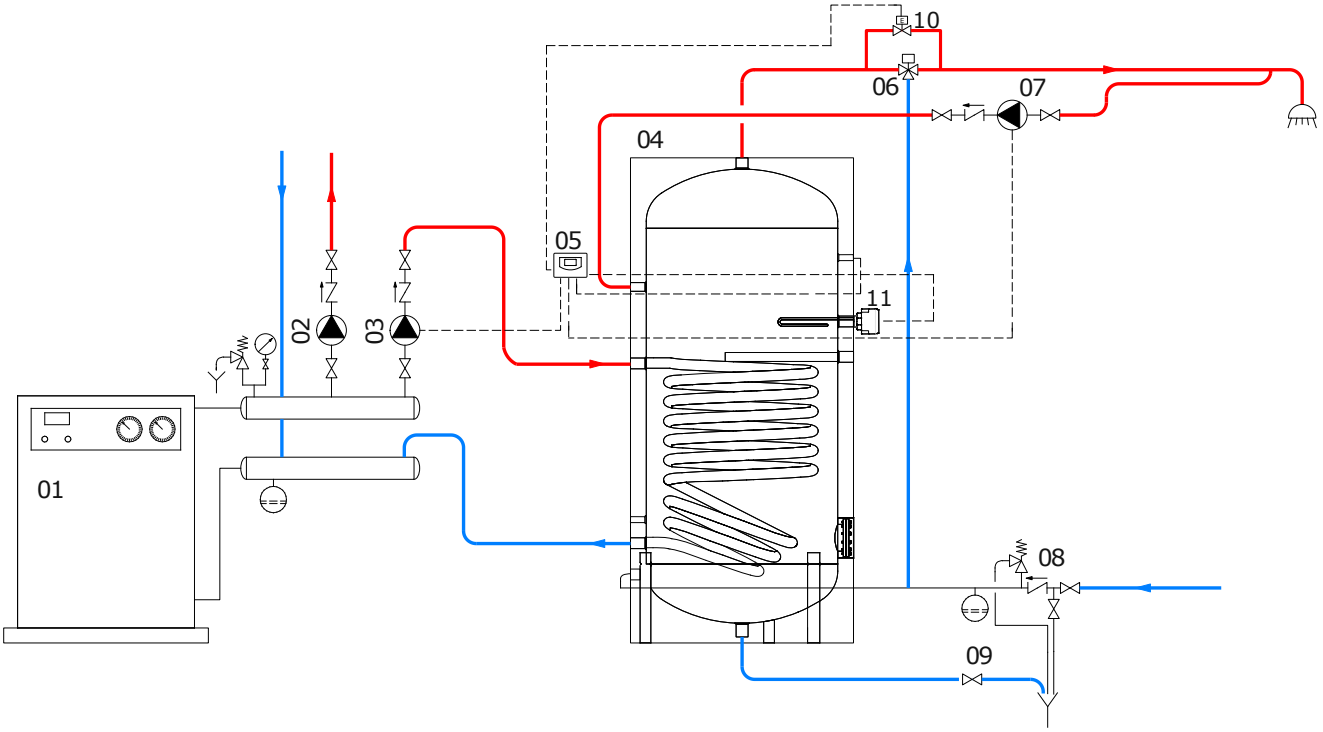

01	Generator	04	BOLLY® 1 ST INOX	07	D.H.W. recirculation group	10	By-pass solenoid valve
02	Heating system circulation group	05	FULL CONTROL electronic unit / thermostat	08	Hydraulic safety group	11	Electric immersion heater (optional)
03	D.H.W. circulation group	06	Thermostatic mixing valve	09	Blowdown valve		

The following schemes are purely illustrative. To realize the installation, always refer to a qualified technician.

BOLLY® 2 ST INOX

STAINLESS STEEL 316L DOMESTIC HOT WATER CALORIFIER
WITH 2 FIXED STAINLESS STEEL HEAT EXCHANGERS



316L STAINLESS STEEL DHW STORAGE

316L STAINLESS STEEL HEAT EXCHANGER

FRONT/BACK ALIGNED CONNECTIONS

PROMPT AVAILABILITY

APPLICATION
Production and storage of domestic hot water (DHW).
All the connections are aligned on the front and on the back for quick and easy installation.

MATERIAL
Stainless Steel 316 L suitable for domestic hot water

HEAT EXCHANGER
Nr. 2 fixed stainless steel 316L heat exchangers.

INSULATION
HARD: High thermal insulation with ecological polyurethane hard foam.
SOFT (DISMOUNTABLE): NOFIRE® polyester fleece 100% made of recyclable material, with high thermal insulation. Fire resistance class B-s2d0 according to EN 13501. Grey PVC external lining.

CATHODE PROTECTION
Magnesium anode - Models > 800 Nr. Nr. 2 magnesium anodes.

DRAIN
External confluence through drain connection

GASKET- FLANGE PLATE
Silicone gaskets suitable for water intended for human consumption (tested according to 98/83/CE); Stainless steel blind flange.

WARRANTY
5 years (See general sales conditions and warranty)

ACCESSORIES AND SPARE PARTS
See Accessories section for the entire list.



BOLLY® 2 ST XB
HARD FOAM INSULATION



BOLLY® 2 ST XC
DISMOUNTABLE SOFT FLEECE INSULATION

Model	Art. Nr.	Heat exchangers surface [m²] Upper	Heat exchangers surface [m²] Lower	ErP ENERGY EFFICIENCY CLASS
150	3134052010200	0,4	0,6	B
200	3134052010201	0,5	0,7	B
300	3134052010202	0,7	1	B
400	3134052010203	1,1	1,4	B
500	3134052010204	1,2	1,7	B
800	3138052010200	1,6	2,4	C
1000	3138052010201	1,7	2,9	C
1500	3138052010202	2,1	3,6	C
2000	3138052010203	2,3	3,8	C

ACCESSORIES

ELECTRIC IMMERSION HEATERS

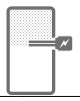

Mod.	Heated volume by electric immersion heater [lt]	MONOPHASE 1,5 kW	MONOPHASE 2 kW	MONOPHASE 3 kW	THREEPHASE 4 kW	THREEPHASE 5 kW	THREEPHASE 6 kW	THREEPHASE 9 kW	THREEPHASE 12 kW
		5240000000051	5240000000052	5240000000053	5240000000047	5240000000048	5240000000049	5240000000050	5240000000031
		Ignition time from 10 °C to 45 °C with electric immersion heaters [min]			Ignition time from 10 °C to 45 °C with electric immersion heaters [min]				
150	55	98	73	49	37	//	//	//	//
200	65	117	88	59	44	//	//	//	//
300	113	203	152	101	76	61	//	//	//
400	171	307	230	154	115	92	//	//	//
500	188	337	253	168	126	101	84	//	//
800	279	500	375	250	188	150	125	83	63
1000	381	682	511	341	256	205	170	114	85
1500	640	1147	860	573	430	344	287	191	143
2000	919	1646	1235	823	617	494	412	274	206

FULL CONTROL electronic unit (mounted on tank)

Art. Nr.	for models
5220280000004	XC
5220280000005	XB



HEAT MANAGER + electric immersion heater 1,5 kW + probe +3m cable

Art. Nr.	Output [kW]
5240000000074	1,5
5240000000075	2
5240000000076	3



Products designed and manufactured for using within temperature and pressure limits in accordance to Art. 4.3 Directive 2014/68/EU (P.E.D.)

BOLLY® **2 ST INOX**

STAINLESS STEEL 316L DOMESTIC HOT WATER CALORIFIER
WITH 2 FIXED STAINLESS STEEL HEAT EXCHANGERS

STORAGE		HEAT EXCHANGER	
Pmax	Tmax	Pmax	Tmax
6 bar	95 °C	12 bar	110 °C

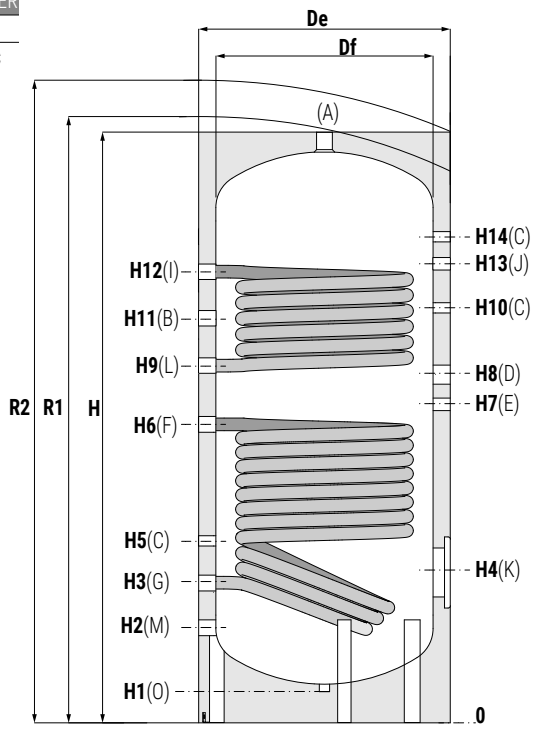

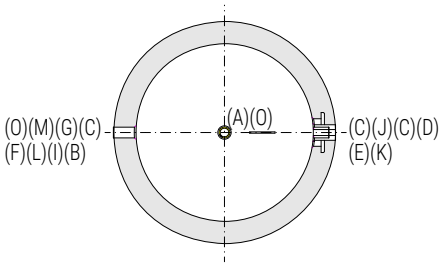

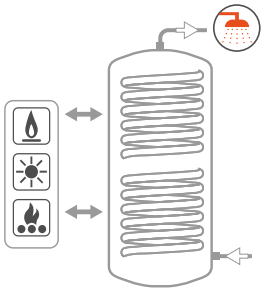

A	Domestic hot water outlet
B	Recirculation
C	Connection for instrumentation G 1/2" F
D	Connection for electric immersion heater
E	Connection for magnesium anode G 1"1/4 F
F	Lower heat exchanger inlet G 1"F
G	Lower heat exchanger outlet G 1"F
J	Connection for 2nd magnesium anode G 1"1/4 F (Models > 800)
K	Flange for inspection
M	Domestic cold water circuit inlet
L	Upper heat exchanger outlet G 1" F
I	Upper heat exchanger inlet G 1"F
O	Drain

BOLLY® 2 ST INOX - HARD FOAM INSULATION (XB)

Model	Volume	Weight	Df	De	H	R2	H1	H2	H3	H4	H5	H6	H7	H8	H9	H10	H11	H12	H14
	[lt]	[kg]	[mm]																
150	150	35	400	500	1420	1510	65	200	310	340	480	718	750	890	935	1030	1060	1180	1180
200	192	43	450	550	1440	1540	65	210	320	310	430	788	810	930	962	1070	1094	1200	1200
300	293	69	550	650	1495	1638	70	240	350	380	460	755	780	910	957	1050	1110	1230	1230
400	425	85	600	700	1770	1907	65	250	360	390	470	895	925	1050	1082	1190	1325	1469	1480
500	503	99	650	750	1796	1950	65	260	370	400	480	923	970	1105	1155	1268	1335	1479	1490

Model	A	B	C	D	E	F	G	M	O	L	I	K
	Connections F											[mm]
150	1"	3/4"	1/2"	1"1/2	1"1/4	1"	1"	3/4"	1/2"	1"	1"	Øi120/Øe180
200	1"	3/4"	1/2"	1"1/2	1"1/4	1"	1"	3/4"	1/2"	1"	1"	Øi120/Øe180
300	1"	1"	1/2"	1"1/2	1"1/4	1"	1"	1"	1/2"	1"	1"	Øi120/Øe180
400	1"	1"	1/2"	1"1/2	1"1/4	1"	1"	1"	1/2"	1"	1"	Øi120/Øe180
500	1"	1"	1/2"	1"1/2	1"1/4	1"	1"	1"	1/2"	1"	1"	Øi120/Øe180

Net volume data according to EN 15332 available on product label.

BOLLY® 2 ST INOX - DISMOUNTABLE SOFT FLEECE INSULATION (XC)

Model	Volume	Weight	Df	De	H	R1	R2	H1	H2	H3	H4	H5	H6	H7	H8	H9	H10	H11	H12	H13	H14
	[lt]	[kg]	[mm]																		
800	759	156	790	990	1943	1968	2185	114	323	443	473	563	998	1033	1193	1413	1339	1413	1563	//	1563
1000	902	193	790	990	2193	2231	2415	114	318	443	473	563	996	1043	1233	1333	1412	1493	1633	1683	1813
1500	1398	271	1000	1240	2197	2260	2530	114	327	462	492	582	1012	1042	1182	1217	1381	1432	1637	1652	1782
2000	2018	381	1250	1470	2070	2204	2555	85	350	485	515	605	939	965	1105	1155	1258	1305	1455	1485	1605

Model	A	B	C	D	E	F	G	J	K	M	O	L	I
	Connections F												
800	1"1/4	1"	1/2"	1"1/2	1"1/4	1"1/4	1"1/4	//	Øi120/Øe180	1"	3/4"	1"1/4	1"1/4
1000	1"1/4	1"	1/2"	2"	1"1/4	1"1/4	1"1/4	1"1/4	Øi120/Øe180	1"	3/4"	1"1/4	1"1/4
1500	2"	2"	1/2"	2"	1"1/4	1"1/4	1"1/4	1"1/4	Øi170/Øe240	2"	1"	1"1/4	1"1/4
2000	2"	2"	1/2"	2"	1"1/4	1"1/4	1"1/4	1"1/4	Øi170/Øe240	2"	1"	1"1/4	1"1/4

Net volume data according to EN 15332 available on product label.

Products designed and manufactured for using within temperature and pressure limits in accordance to Art. 4.3 Directive 2014/68/EU (P.E.D.)

BOLLY® **2 ST INOX**

HEAT EXCHANGERS TECHNICAL DATA



Data have been calculated on following basis:
1) Primary circuit at T1 and proper energy source;
2) Production of DHW in continuous from 10 °C to t2;
3) DHW that can be taken in the first 10' and in the first hour from storage at t2, input 10 °C and output 45 °C;
4) Non-scaling sanitary water

UPPER
HEAT EXCHANGER

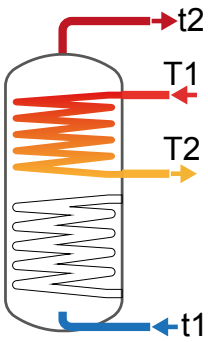

Model	Primary flow rate	Ignition time (minutes) from 10 °C to t2 and primary at T1				Maximum power exchange (kW) with primary at T1, secondary within 10-45 °C and constant use of DHW production				DHW continuous production lt/h within 10-45 °C and primary at T1HW production			
	[m³/h]	T1/t2				T1				T1			
		55/50	65/60	70/60	80/60	55	65	70	80	55	65	70	80
150	2	57	62	38	24	3,3	4,2	5,4	7,6	66	67	87	126
	1	65	70	43	27	3,1	3,9	5,0	7,0	61	62	81	116
200	2,5	47	49	32	21	4,9	6,2	7,9	11,2	100	101	132	189
	1,25	52	55	36	23	4,6	5,8	7,4	10,4	94	95	123	175
300	3	50	52	35	23	6,8	8,5	10,9	15,4	140	142	185	263
	1,5	55	58	39	25	6,4	8,1	10,3	14,4	133	135	173	245
400	3,5	57	59	41	26	10,2	12,8	16,4	23,1	214	217	280	397
	1,75	63	66	45	29	9,6	12,2	15,5	21,5	203	206	264	369
500	3,5	54	56	39	25	11,2	14,1	18,1	25,4	237	240	310	438
	1,75	60	63	43	28	10,6	13,4	17,0	23,6	224	228	291	406
800	6	60	62	43	28	15,0	18,9	24,2	34,0	320	324	416	588
	3	65	68	48	31	14,3	18,0	22,9	31,8	305	309	394	550
1000	6	49	51	36	23	15,7	19,7	25,2	35,4	334	338	435	613
	3	54	57	40	26	14,9	18,8	23,9	33,1	318	322	411	573
1500	6	82	85	60	39	19,6	24,7	31,6	44,2	421	425	545	766
	3	91	95	67	44	18,6	23,5	29,7	41,1	399	404	513	711
2000	6	98	101	71	47	21,5	27,0	34,5	48,2	460	466	596	836
	3	109	114	80	53	20,3	25,7	32,4	44,7	436	442	560	775

Model	Primary flow rate	DHW produced in the first 10 minutes in lt/10' input 10 °C output 45 °C, storage at t2 and primary at T1				DHW produced in the first hour in lt/60' input 10 °C output 45 °C, storage at t2 and primary at T1				Heat exchanger pressure drop	
	[m³/h]	T1/t2				T1/t2				[mmH_2O]	[mbar]
		55/50	65/60	70/60	80/60	55/50	65/60	70/60	80/60		
150	2	62	75	79	85	104	105	121	152	146	14
	1	62	75	78	84	100	101	116	144	42	4
200	2,5	83	100	105	114	146	147	172	217	295	29
	1,25	82	99	103	112	141	142	165	206	85	8
300	3	124	149	157	170	213	214	249	311	533	52
	1,5	123	148	155	167	207	209	239	297	155	15
400	3,5	211	255	265	285	346	348	399	492	1002	98
	1,75	209	253	263	280	337	340	386	470	293	29
500	3,5	224	270	282	303	374	376	432	534	1096	107
	1,75	221	268	279	298	363	366	417	509	321	31
800	6	331	401	416	445	534	537	611	748	749	73
	3	329	399	413	439	522	525	593	718	218	21
1000	6	296	356	373	402	507	510	588	730	777	76
	3	293	354	369	396	494	498	569	698	227	22
1500	6	566	691	711	748	833	836	932	1109	954	94
	3	563	687	706	739	815	819	906	1065	279	27
2000	6	722	885	906	946	1014	1019	1123	1315	1036	102
	3	718	881	900	936	995	999	1094	1266	304	30

BOLLY® **2 ST INOX**

HEAT EXCHANGERS TECHNICAL DATA



Data have been calculated on following basis:
1) Primary circuit at T1 and proper energy source;
2) Production of DHW in continuous from 10 °C to t2;
3) DHW that can be taken in the first 10' and in the first hour from storage at t2, input 10 °C and output 45 °C;
4) Non-scaling sanitary water

LOWER
HEAT EXCHANGER

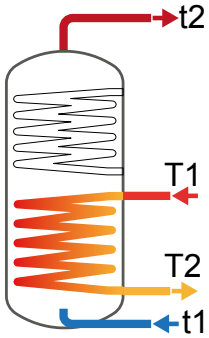

Model	Primary flow rate	Ignition time (minutes) from 10 °C to t2 and primary at T1				Maximum power exchange (kW) with primary at T1, secondary within 10-45 °C and constant use of DHW production				DHW continuous production lt/h within 10-45 °C and primary at T1HW production			
	[m³/h]	T1/t2				T1				T1			
		55/50	65/60	70/60	80/60	55	65	70	80	55	65	70	80
150	2	112	118	79	50	5,3	6,6	8,5	12,0	108	110	142	203
	1	128	135	89	57	4,9	6,2	7,9	11,0	100	102	131	185
200	2,5	111	116	79	51	6,7	8,4	10,8	15,2	139	141	182	259
	1,25	124	131	88	57	6,3	7,9	10,1	14,0	130	132	169	238
300	3	108	112	78	50	10,3	13,0	16,7	23,4	218	221	285	403
	1,5	121	127	87	57	9,7	12,3	15,6	21,6	206	209	266	371
400	3,5	115	120	83	55	13,9	17,6	22,5	31,5	297	301	386	544
	1,75	130	136	95	62	13,2	16,6	21,0	29,0	280	284	361	501
500	3,5	118	123	86	56	16,2	20,4	26,0	36,4	345	350	449	630
	1,75	135	141	99	65	15,2	19,3	24,3	33,4	325	330	418	577
800	6	121	126	89	58	23,3	29,3	37,4	52,2	500	506	647	906
	3	136	142	100	66	22,0	27,8	35,1	48,3	473	480	607	837
1000	6	127	132	93	61	26,6	33,4	42,6	59,3	571	578	738	1031
	3	144	150	106	70	25,1	31,7	39,8	54,6	539	547	690	948
1500	6	163	169	120	79	32,6	41,1	52,1	72,4	703	711	905	1259
	3	187	195	139	92	30,7	38,7	48,5	66,1	660	671	842	1149
2000	6	220	229	162	107	35,0	44,1	56,0	77,5	755	765	972	1349
	3	254	265	189	126	32,9	41,6	52,0	70,6	709	720	902	1228

Model	Primary flow rate	DHW produced in the first 10 minutes in lt/10' input 10 °C output 45 °C, storage at t2 and primary at T1				DHW produced in the first hour in lt/60' input 10 °C output 45 °C, storage at t2 and primary at T1				Heat exchanger pressure drop	
	[m³/h]	T1/t2				T1/t2				[mmH$_2$O]	[mbar]
		55/50	65/60	70/60	80/60	55/50	65/60	70/60	80/60		
150	2	188	231	237	247	257	258	284	333	213	21
	1	187	230	235	244	250	252	275	318	62	6
200	2,5	241	296	303	316	329	331	364	425	413	40
	1,25	240	295	301	313	322	324	353	409	120	12
300	3	371	455	466	486	509	512	563	657	782	77
	1,5	369	453	463	480	500	502	548	632	229	23
400	3,5	535	657	671	698	723	727	795	921	1345	132
	1,75	532	654	667	691	710	713	775	887	395	39
500	3,5	632	777	793	824	851	855	934	1079	1551	152
	1,75	629	774	788	815	835	839	909	1036	456	45
800	6	951	1169	1192	1235	1267	1272	1385	1592	1118	110
	3	946	1164	1185	1224	1246	1251	1353	1537	328	32
1000	6	1126	1385	1412	1460	1488	1493	1621	1856	1266	124
	3	1121	1380	1404	1447	1462	1468	1583	1789	375	36
1500	6	1715	2116	2148	2207	2160	2167	2322	2605	1542	151
	3	1708	2109	2137	2189	2126	2135	2271	2517	454	45
2000	6	2432	3010	3045	3108	2910	2918	3084	3385	1653	162
	3	2424	3003	3033	3088	2873	2882	3028	3289	487	48

BOLLY® **2 ST INOX**

HEAT EXCHANGERS PRESSURE DROP (UPPER)



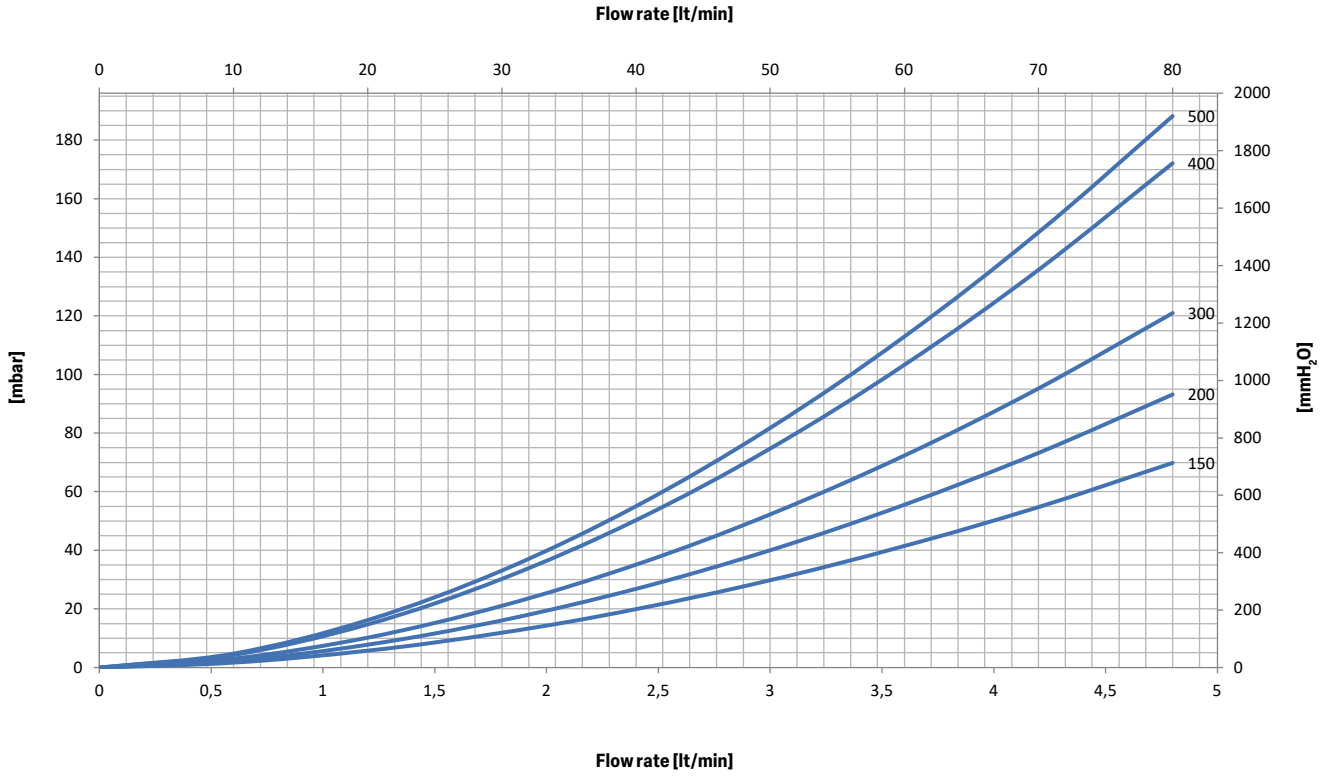

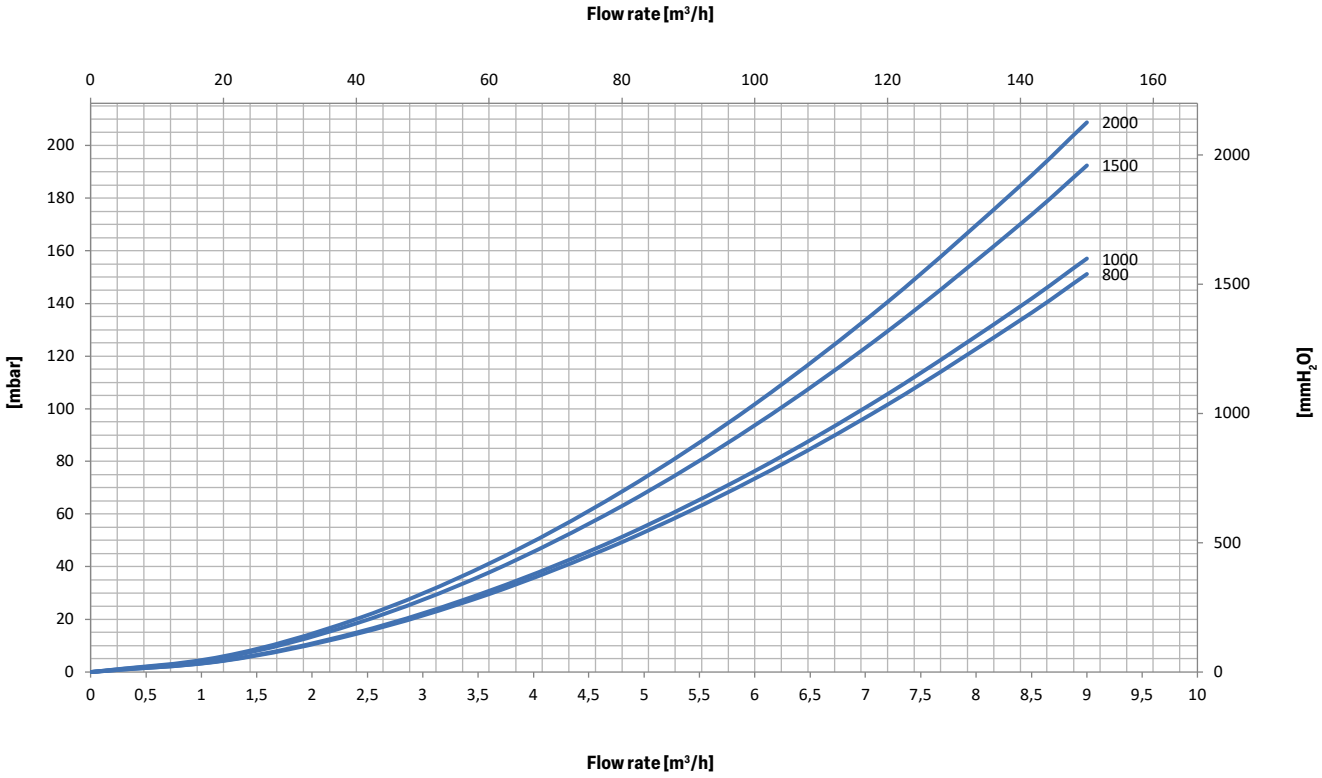

PLEASE NOTE: FOR HEAT EXCHANGERS PRESSURE DROP SEE BOLLY® 1 ST

BOLLY® **2 ST INOX**

HEAT EXCHANGERS TECHNICAL DATA (UPPER)



Heat Exchanger output referred to temperature and flow rate of primary circuit and with secondary at 10/45°C at maximum withdrawal of producible DHW (Upper limit of the curves referred to maximum primary flow rate in the heat exchanger, while the lower limit in the curves refer to the minimum primary flow rate).
For Lower upper heat exchangers technical data- see BOLLY® 1 ST

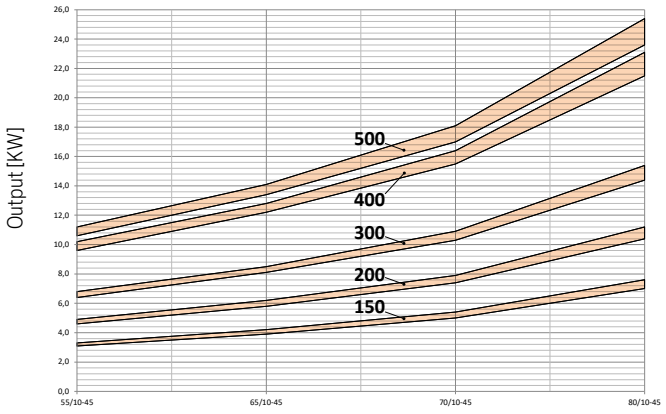

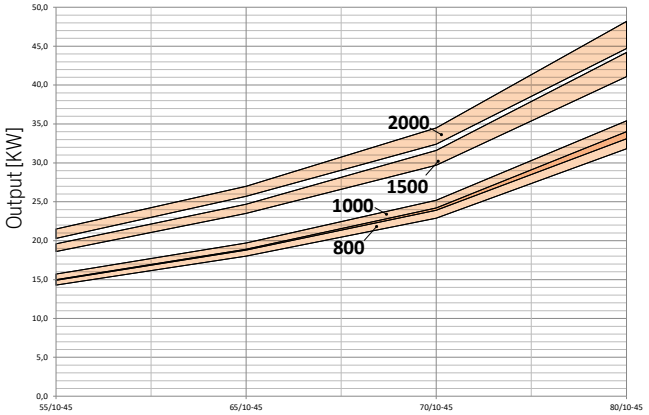

Model Bolly® 2 ST inox	150		200		300		400		500	
Flow rate [m³/h]	MAX	MIN	MAX	MIN	MAX	MIN	MAX	MIN	MAX	MIN
	2	1	2,5	1,25	3	1,5	3,5	1,75	3,5	1,75

Model Bolly® 2 ST inox	800		1000		1500		2000	
Flow rate [m³/h]	MAX	MIN	MAX	MIN	MAX	MIN	MAX	MIN
	6	3	6	3	6	3	6	3

EXAMPLE OF INSTALLATION WITH **BOLLY® 2 ST INOX**

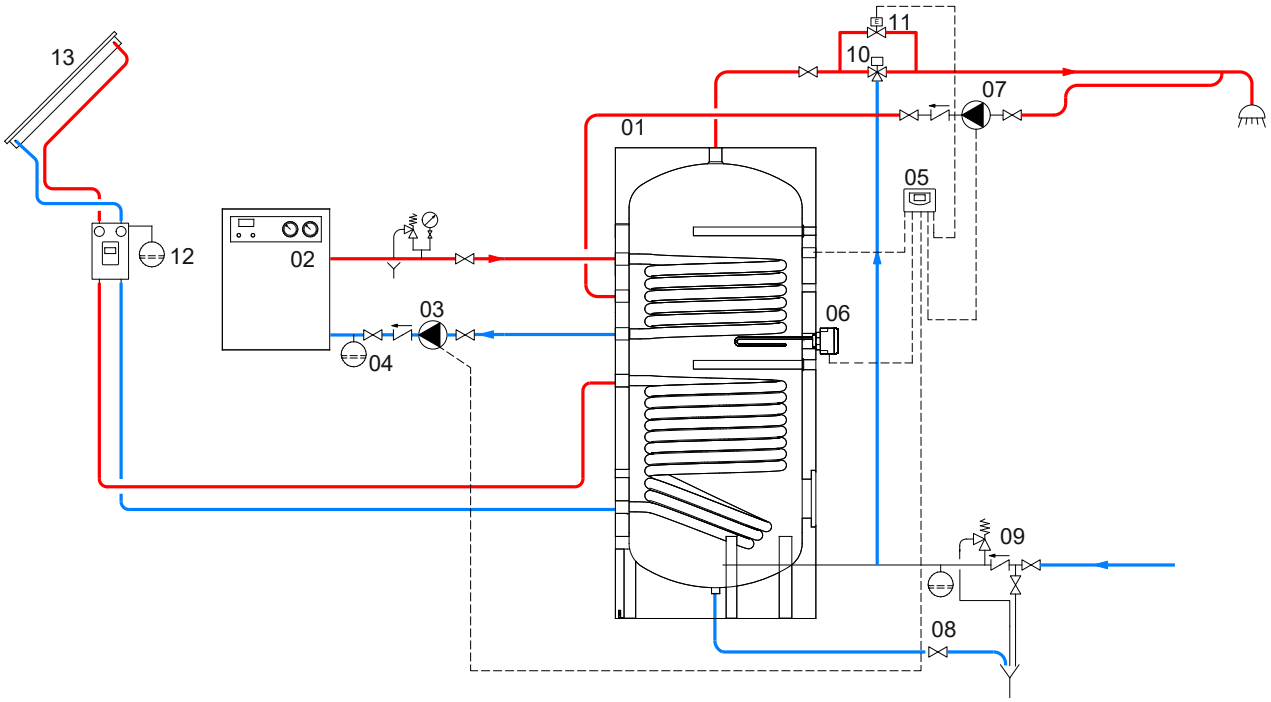

1	BOLLY® 2 ST INOX	5	FULL CONTROL electronic unit / thermostat	9	Hydraulic safety group	13	Solar panels
2	Generator	6	Electric immersion heater (optional)	10	Thermostatic mixing valve		
3	Circulation group	7	D.H.W. recirculation group	11	By-pass solenoid valve		
4	Expansion vessel	8	Blowdown valve	12	Solar system circulation group		

The following schemes are purely illustrative. To realize the installation, always refer to a qualified technician.

BOLLY® 1 AP INOX - HIGH PERFORMANCE

STAINLESS STEEL 316L DOMESTIC HOT WATER CALORIFIER
WITH 1 FIXED STAINLESS STEEL HEAT EXCHANGER FOR DHW PRODUCTION





APPLICATION
Production and storage of domestic hot water (DHW).
All the connections are aligned on the front and on the back for quick and easy installation.

MATERIAL
Stainless Steel 316 L suitable for domestic hot water

HEAT EXCHANGER
Nr. 1 fixed stainless steel 316L heat exchanger.

INSULATION
HARD: High thermal insulation with ecological polyurethane hard foam.
HARD FOAM (CLASS "A" MODELS): hard polyurethane foam for high thermal insulation with a vacuum sheet of highly insulating material.Grey PVC external lining.

CATHODE PROTECTION
Magnesium anode.

DRAIN
External confluence through drain connection.

GASKET- FLANGE PLATE
Silicone gaskets suitable for water intended for human consumption (tested according to 98/83/CE); Stainless steel blind flange and connection for electric heater.

WARRANTY
5 years (See general sales conditions and warranty)

ACCESSORIES AND SPARE PARTS:
See Accessories section for the entire list.

		Model	Art. Nr.	Heat exchangers surface [m²]	ErP ENERGY EFFICIENCY CLASS
 	**BOLLY® 1 AP XB** HARD FOAM INSULATION	**150**	3104052010100	1,0	**B**
		200	3104052010101	1,2	**B**
		300	3104052010102	1,5	**B**
		400	3104052010103	2,0	**B**
		500	3104052010104	2,2	**B**
 	**BOLLY® 1 AP XB - (class A)** HARD FOAM INSULATION	**200**	3104052010110	1,2	**A**
		300	3104052010111	1,5	**A**
		500	3104052010112	2,2	**A**

ACCESSORIES

ELECTRIC IMMERSION HEATERS

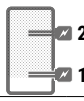

Mod.	Position electric immersion heater	Heated volume by electric immersion heater [lt]	MONOPHASE 1,5 kW	MONOPHASE 2 kW	MONOPHASE 3 kW	THREEPHASE 4 kW	THREEPHASE 5 kW	THREEPHASE 6 kW
			5240000000051	5240000000052	5240000000053	5240000000047	5240000000048	5240000000049
			Ignition time from 10 °C to 45 °C with electric immersion heaters [min]			Ignition time from 10 °C to 45 °C with electric immersion heaters [min]		
150	1	126	225	169	113	//	//	//
	2	46	82	61	41	31	//	//
200	1	161	288	216	144	//	//	//
	2	53	94	71	47	35	//	//
300	1	237	425	319	213	159	//	//
	2	83	148	111	74	56	45	//
400	1	356	637	478	318	239	//	//
	2	138	247	185	124	93	74	//
500	1	417	746	560	373	280	224	//
	2	150	269	202	135	101	81	67

FULL CONTROL electronic unit (mounted on tank)

Art. Nr.	for models
5220280000005	WB



Products designed and manufactured for using within temperature and pressure limits in accordance to Art. 4.3 Directive 2014/68/EU (P.E.D.)

BOLLY® **1 AP INOX** - **HIGH PERFORMANCE**

STAINLESS STEEL 316L DOMESTIC HOT WATER CALORIFIER
WITH 1 FIXED STAINLESS STEEL HEAT EXCHANGER FOR DHW PRODUCTION

STORAGE		HEAT EXCHANGER	
Pmax	Tmax	Pmax	Tmax
6 bar	95 °C	12 bar	110 °C

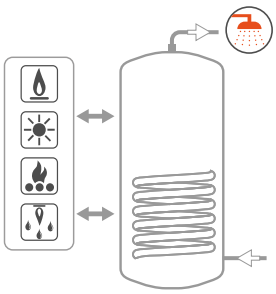

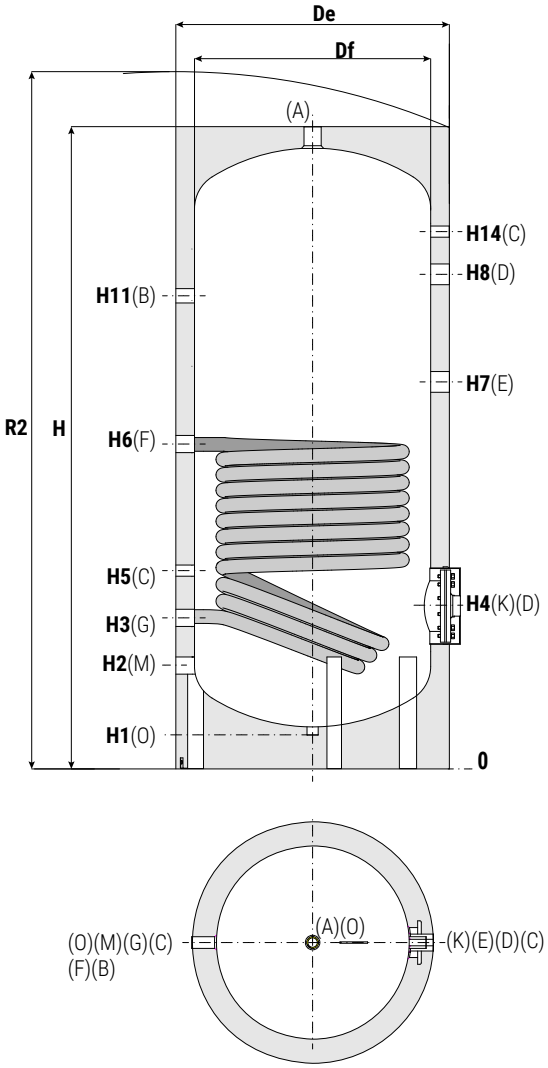

A	Domestic hot water outlet
B	Recirculation
C	Connection for instrumentation G 1/2" F
D	Connection for electric immersion heater
E	Connection for magnesium anode G 1"1/4 F
F	Primary circuit inlet G 1" F
G	Primary circuit outlet G 1" F
K	Flange for inspection
M	Domestic cold water circuit inlet
O	Drain

BOLLY® 1 AP INOX - 1 AP INOX CLASS A (HARD FOAM INSULATION -XB)

Model	Volume	Weight	Df	De	H	R2	H1	H2	H3	H4	H5	H6	H7	H8	H11	H14
	[lt]	[kg]	[mm]													
150	150	35	400	500	1420	1510	65	205	310	310	420	719	830	960	1060	1180
200	192	41	450	550	1440	1540	65	215	320	320	430	780	880	1010	1094	1200
300	293	59	550	650	1495	1639	70	245	350	380	460	750	910	1040	1110	1230
400	425	79	600	700	1770	1907	65	255	360	390	470	895	1040	1170	1325	1480
500	503	84	650	750	1796	1950	65	265	370	480	405	1060	1090	1220	1335	1490

Model	A	B	C	D	E	F	G	K	M	O
	Connections F									
150	1"	3/4"	1/2"	1"1/2	1"1/4	1"	1"	Øi120/Øe180	3/4"	1/2"
200	1"	3/4"	1/2"	1"1/2	1"1/4	1"	1"	Øi120/Øe180	3/4"	1/2"
300	1"	1"	1/2"	1"1/2	1"1/4	1"	1"	Øi120/Øe180	1"	1/2"
400	1"	1"	1/2"	1"1/2	1"1/4	1"	1"	Øi120/Øe180	1"	1/2"
500	1"	1"	1/2"	1"1/2	1"1/4	1"	1"	Øi120/Øe180	1"	1/2"

Net volume data according to EN 15332 available on product label.

Products designed and manufactured for using within temperature and pressure limits in accordance to Art. 4.3 Directive 2014/68/EU (P.E.D.)

BOLLY® **1 AP INOX**

HEAT EXCHANGERS TECHNICAL DATA



Data have been calculated on following basis:
1) Primary circuit at T1 and proper energy source;
2) Production of DHW in continuous from 10 °C to t2;
3) DHW that can be taken in the first 10' and in the first hour from storage at t2, input 10 °C and output 45 °C;
4) Non-scaling sanitary water

LOWER
HEAT EXCHANGER

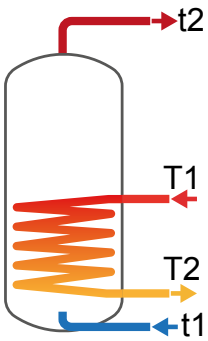

Model	Primary flow rate	Ignition time (minutes) from 10 °C to t2 and primary at T1				Maximum power exchange (kW) with primary at T1, secondary within 10-45 °C and constant use of DHW production				DHW continuous production lt/h within 10-45 °C and primary at T1HW production			
	[m³/h]	T1/t2				T1				T1			
		55/50	**65/60**	**70/60**	**80/60**	**55**	**65**	**70**	**80**	**55**	**65**	**70**	**80**
150	2	65	68	47	30	8,9	11,3	14,4	20,1	188	191	245	345
	1	76	78	55	36	8,3	10,5	13,2	18,1	173	176	224	310
200	2,5	65	68	47	31	11,3	14,3	18,2	25,4	240	243	315	438
	1,25	75	78	55	36	10,6	13,4	16,8	23,1	223	227	287	397
300	3	79	82	57	37	14,3	18,0	22,9	32,0	304	308	394	553
	1,5	90	94	66	43	13,4	16,9	21,3	29,2	284	289	366	504
400	3,5	85	89	62	41	19,1	24,0	30,1	42,7	408	414	529	739
	1,75	99	103	72	48	17,9	22,6	28,4	38,9	383	389	491	673
500	3,5	93	96	68	45	20,9	26,4	33,6	46,6	448	454	580	809
	1,75	108	113	80	53	19,6	24,8	31,1	42,3	420	427	537	734

Model	Primary flow rate	DHW produced in the first 10 minutes in lt/10' input 10 °C output 45 °C, storage at t2 and primary at T1				DHW produced in the first hour in lt/60' input 10 °C output 45 °C, storage at t2 and primary at T1				Heat exchanger pressure drop	
	[m³/h]	T1/t2				T1/t2				[mmH$_2$O]	[mbar]
		55/50	**65/60**	**70/60**	**80/60**	**55/50**	**65/60**	**70/60**	**80/60**		
150	2	202	245	254	270	321	323	366	446	342	34
	1	199	242	250	265	309	311	349	418	100	10
200	2,5	258	313	325	346	410	413	470	569	623	61
	1,25	255	311	321	339	397	400	448	536	183	18
300	3	386	470	484	511	578	581	650	777	1057	104
	1,5	382	467	480	503	562	566	628	738	311	30
400	3,5	554	676	695	730	812	817	909	1077	1817	178
	1,75	550	672	689	719	792	797	879	1024	536	53
500	3,5	650	794	815	853	933	938	1039	1222	1989	195
	1,75	645	790	808	841	911	916	1004	1162	587	58

HEAT EXCHANGERS PRESSURE DROP

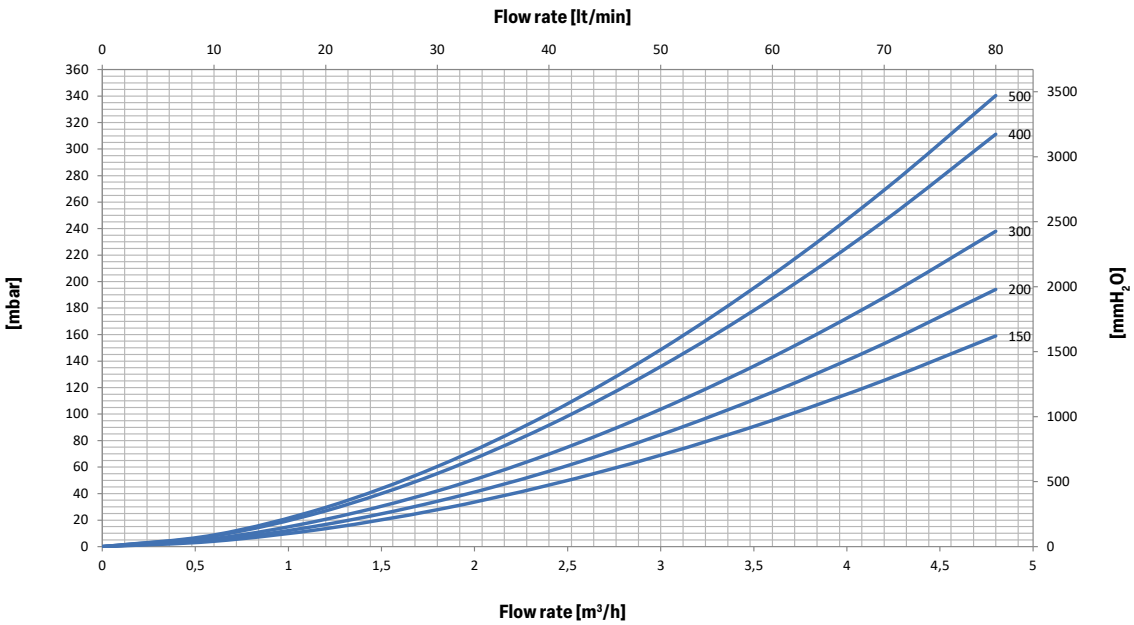

BOLLY® **1 AP INOX**

HEAT EXCHANGERS TECHNICAL DATA



Heat Exchanger output referred to temperature and flow rate of primary circuit and with secondary at 10/45°C at maximum withdrawal of producible DHW (Upper limit of the curves referred to maximum primary flow rate in the heat exchanger, while the lower limit in the curves refer to the minimum primary flow rate).

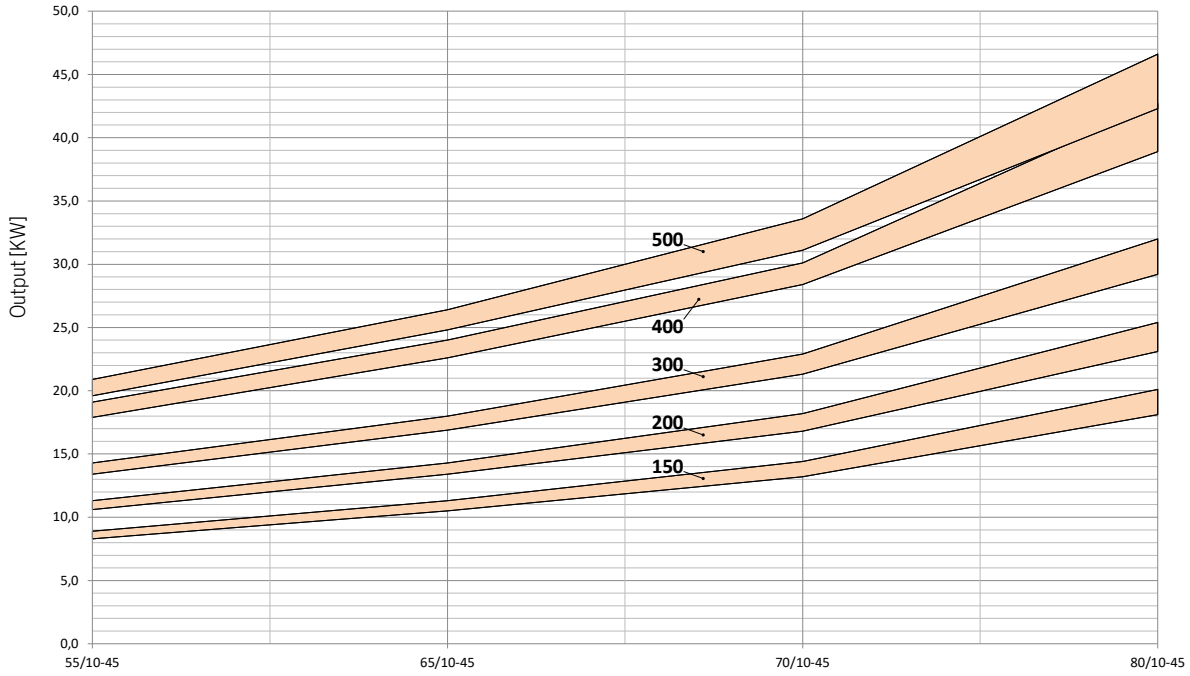

Model Bolly® 1 AP XB	150		200		300		400		500	
Flow rate [m³/h]	MAX	MIN	MAX	MIN	MAX	MIN	MAX	MIN	MAX	MIN
	2	1	2,5	1,25	3	1,5	3,5	1,75	3,5	1,75

EXAMPLE OF INSTALLATION WITH **BOLLY® 1 AP INOX**

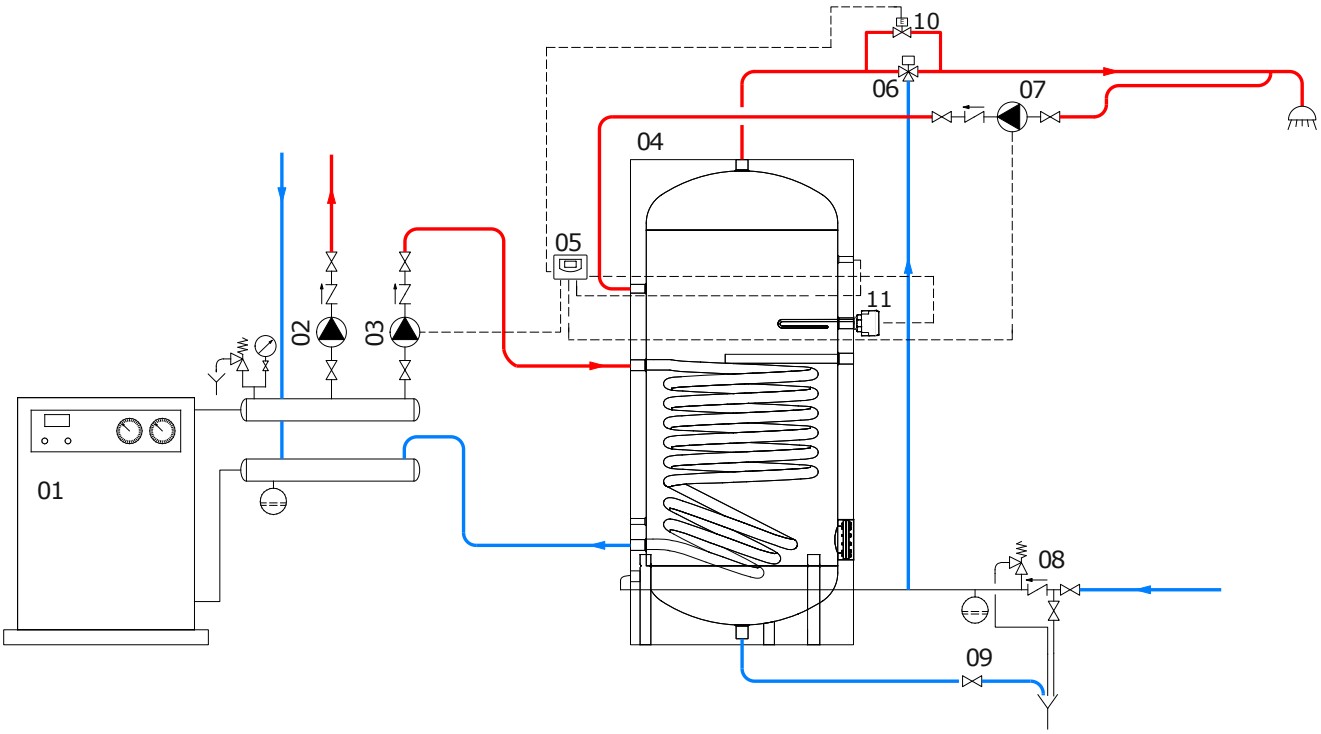

01	Generator	04	BOLLY® 1 AP INOX	07	D.H.W. recirculation group	10	By-pass solenoid valve
02	Heating system circulation group	05	FULL CONTROL electronic unit / thermostat	08	Hydraulic safety group	11	Electric immersion heater (optional)
03	D.H.W. circulation group	06	Thermostatic mixing valve	09	Blowdown valve		

The following schemes are purely illustrative. To realize the installation, always refer to a qualified technician.

BOLLY® **2 AP INOX** - HIGH PERFORMANCE

STAINLESS STEEL 316L DOMESTIC HOT WATER CALORIFIER
WITH 2 FIXED STAINLESS STEEL HEAT EXCHANGERS



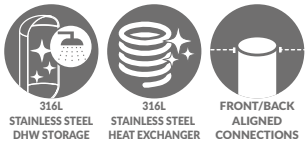

APPLICATION
Production and storage of domestic hot water (DHW).
All the connections are aligned on the front and on the back for quick and easy installation.

MATERIAL
Stainless Steel 316 L suitable for domestic hot water

HEAT EXCHANGER
Nr. 2 fixed stainless steel 316L heat exchanger.

INSULATION
HARD: High thermal insulation with ecological polyurethane hard foam.
HARD FOAM (CLASS "A" MODELS): hard polyurethane foam for high thermal insulation with a vacuum sheet of highly insulating material.Grey PVC external lining.

CATHODE PROTECTION
Magnesium anode.

DRAIN
External confluence through drain connection

GASKET- FLANGE PLATE
Silicone gaskets suitable for water intended for human consumption (tested according to 98/83/CE); Stainless steel blind flange and connection for electric heater.

WARRANTY
5 years (See general sales conditions and warranty)

ACCESSORIES AND SPARE PARTS
See Accessories section for the entire list.

	Model	Art. Nr.	Heat exchangers surface [m²] Upper	Heat exchangers surface [m²] Lower	ErP ENERGY EFFICIENCY CLASS
  **BOLLY® 2 AP XB** HARD FOAM INSULATION	150	3134052010300	0,6	1,0	B
	200	3134052010301	0,7	1,2	B
	300	3134052010302	0,9	1,5	B
	400	3134052010303	1,3	2,0	B
	500	3134052010304	1,4	2,2	B
  **BOLLY® 2 AP XB - class A** HARD FOAM INSULATION	200	3134052010310	0,7	1,2	A
	300	3134052010311	0,9	1,5	A
	500	3134052010312	1,4	2,2	A

ACCESSORIES

ELECTRIC IMMERSION HEATERS



Mod.	Position electric immersion heater	Heated volume by electric immersion heater [lt]	MONOPHASE 1,5 kW	MONOPHASE 2 kW	MONOPHASE 3 kW	THREEPHASE 4 kW	THREEPHASE 5 kW	THREEPHASE 6 kW
			5240000000051	5240000000052	5240000000053	5240000000047	5240000000048	5240000000049
			Ignition time from 10 °C to 45 °C with electric immersion heaters [min]			Ignition time from 10 °C to 45 °C with electric immersion heaters [min]		
150	1	126	225	169	113	//	//	//
	2	54	97	73	49	37	//	//
200	1	161	288	216	144	//	//	//
	2	65	117	88	58	44	//	//
300	1	237	425	319	213	159	//	//
	2	113	203	152	101	76	61	//
400	1	356	637	478	318	239	//	//
	2	171	307	230	154	115	92	//
500	1	417	746	560	373	280	224	//
	2	188	337	253	168	126	101	84

FULL CONTROL electronic unit (mounted on tank)

Art. Nr.	for models
5220280000005	XB



Products designed and manufactured for using within temperature and pressure limits in accordance to Art. 4.3 Directive 2014/68/EU (P.E.D.)

BOLLY® **2 AP INOX** - HIGH PERFORMANCE

STAINLESS STEEL 316L DOMESTIC HOT WATER CALORIFIER
WITH 2 FIXED STAINLESS STEEL HEAT EXCHANGERS

STORAGE		HEAT EXCHANGER	
Pmax	Tmax	Pmax	Tmax
6 bar	95 °C	12 bar	110 °C

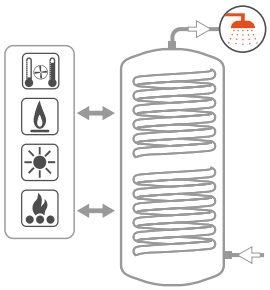

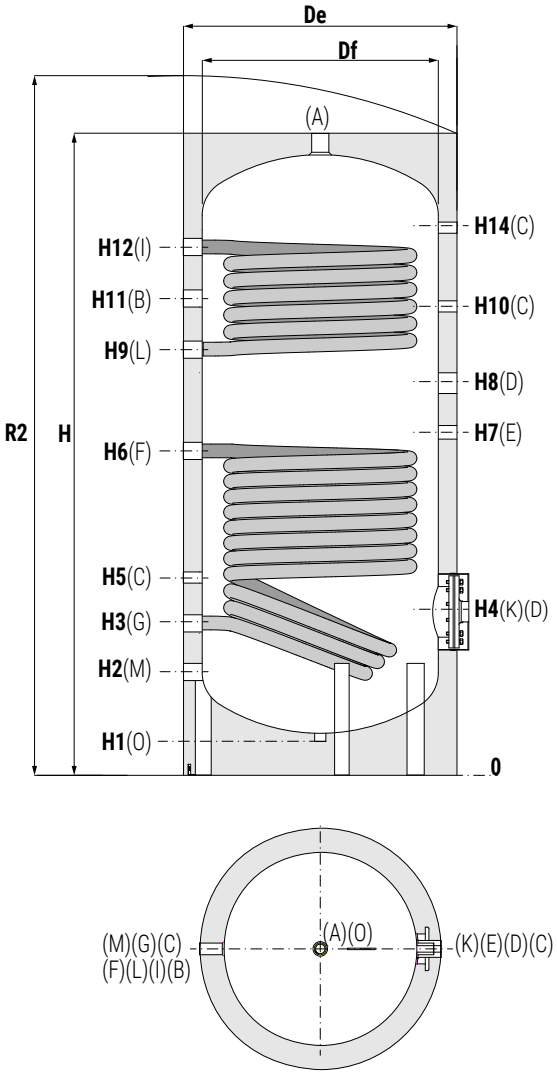

A	Domestic hot water outlet
B	Recirculation
C	Connection for instrumentation G 1/2" F
D	Connection for electric immersion heater
E	Connection for magnesium anode G 1"1/4 F
F	Lower heat exchanger inlet G 1" F
G	Lower heat exchanger outlet G 1" F
K	Flange for inspection
M	Domestic cold water circuit inlet
L	Upper heat exchanger outlet G 1" F
I	Upper heat exchanger inlet G 1" F
O	Drain

BOLLY® 2 AP INOX - 2 AP INOX CLASS A (HARD FOAM INSULATION -XB)

Model	Volume	Weight	Df	De	H	R2	H1	H2	H3	H4	H5	H6	H7	H8	H9	H10	H11	H12	H14
	[lt]	[kg]	[mm]																
150	150	42	400	500	1420	1510	65	205	310	340	480	718	750	890	935	1030	1060	1180	1180
200	192	49	450	550	1440	1540	65	215	320	310	430	488	810	930	962	1070	1094	1200	1200
300	293	70	550	650	1495	1638	70	245	350	380	460	755	780	910	957	1050	1110	1230	1230
400	425	95	600	700	1770	1907	65	255	360	390	470	895	925	1050	1082	1190	1325	1480	1480
500	503	101	650	750	1796	1950	65	265	370	400	480	923	970	1105	1155	1266	1335	1479	1490

Model	A	B	C	D	E	F	G	M	O	L	I	K
	Connections F											[mm]
150	1"	3/4"	1/2"	1"1/2	1"1/4	1"	1"	3/4"	1/2"	1"	1"	Øi120/Øe180
200	1"	3/4"	1/2"	1"1/2	1"1/4	1"	1"	3/4"	1/2"	1"	1"	Øi120/Øe180
300	1"	1"	1/2"	1"1/2	1"1/4	1"	1"	1"	1/2"	1"	1"	Øi120/Øe180
400	1"	1"	1/2"	1"1/2	1"1/4	1"	1"	1"	1/2"	1"	1"	Øi120/Øe180
500	1"	1"	1/2"	1"1/2	1"1/4	1"	1"	1"	1/2"	1"	1"	Øi120/Øe180

Net volume data according to EN 15332 available on product label.

Products designed and manufactured for using within temperature and pressure limits in accordance to Art. 4.3 Directive 2014/68/EU (P.E.D.)

BOLLY® **2 AP INOX**

HEAT EXCHANGERS TECHNICAL DATA



Data have been calculated on following basis:
1) Primary circuit at T1 and proper energy source;
2) Production of DHW in continuous from 10 °C to t2;
3) DHW that can be taken in the first 10' and in the first hour from storage at t2, input 10 °C and output 45 °C;
4) Non-scaling sanitary water

UPPER HEAT EXCHANGER

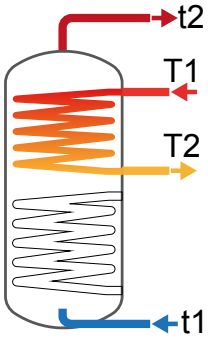

Model	Primary flow rate	Ignition time (minutes) from 10 °C to t2 and primary at T1				Maximum power exchange (kW) with primary at T1, secondary within 10-45 °C and constant use of DHW production				DHW continuous production lt/h within 10-45 °C and primary at T1HW production			
	[m³/h]	T1/t2				T1				T1			
		55/50	65/60	70/60	80/60	55	65	70	80	55	65	70	80
150	2	32	33	22	14	5,6	7,1	9,1	12,8	116	118	153	218
	1	36	38	25	16	5,3	6,6	8,4	11,7	108	110	141	198
200	2,5	36	38	25	16	6,2	7,8	10,0	14,1	128	130	169	241
	1,25	40	42	28	18	5,8	7,4	9,4	13,1	120	122	157	222
300	3	39	40	28	18	8,6	10,9	14,0	19,7	182	184	238	337
	1,5	43	45	31	20	8,2	10,3	13,1	18,2	171	174	223	312
400	3,5	46	48	33	22	12,5	15,8	20,2	28,4	266	269	347	489
	1,75	52	54	37	24	11,9	15,0	19,0	26,2	251	255	325	452
500	3,5	45	47	33	21	13,5	17,0	21,7	30,4	286	290	373	526
	1,75	51	53	37	24	12,7	16,1	20,3	28,1	270	275	349	485

Model	Primary flow rate	DHW produced in the first 10 minutes in lt/10' input 10 °C output 45 °C, storage at t2 and primary at T1				DHW produced in the first hour in lt/60' input 10 °C output 45 °C, storage at t2 and primary at T1				Heat exchanger pressure drop	
	[m³/h]	T1/t2				T1/t2				[mmH$_2$O]	[mbar]
		55/50	65/60	70/60	80/60	55/50	65/60	70/60	80/60		
150	2	71	84	90	101	144	146	174	226	226	22
	1	69	83	88	97	138	139	164	210	65	6
200	2,5	88	105	111	123	169	170	201	259	361	35
	1,25	86	103	109	120	162	164	192	244	105	10
300	3	131	156	165	182	246	248	291	370	664	65
	1,5	129	155	163	178	237	240	279	350	194	19
400	3,5	219	263	276	300	388	390	452	566	1217	119
	1,75	217	261	273	294	376	379	435	536	357	35
500	3,5	232	278	292	318	413	416	482	605	1302	128
	1,75	229	276	288	311	400	404	463	572	382	37

LOWER HEAT EXCHANGER

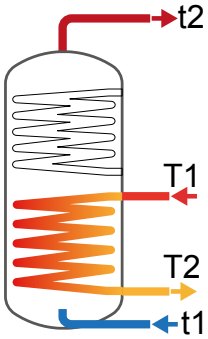

Model	Primary flow rate	Ignition time (minutes) from 10 °C to t2 and primary at T1				Maximum power exchange (kW) with primary at T1, secondary within 10-45 °C and constant use of DHW production				DHW continuous production lt/h within 10-45 °C and primary at T1HW production			
	[m³/h]	T1/t2				T1				T1			
		55/50	65/60	70/60	80/60	55	65	70	80	55	65	70	80
150	2	65	68	47	30	8,9	11,3	14,4	20,1	188	191	245	345
	1	76	78	55	36	8,3	10,5	13,2	18,1	173	176	224	310
200	2,5	65	68	47	31	11,3	14,3	18,2	25,4	240	243	315	438
	1,25	75	78	55	36	10,6	13,4	16,8	23,1	223	227	287	397
300	3	79	82	57	37	14,3	18,0	22,9	32,0	304	308	394	553
	1,5	90	94	66	43	13,4	16,9	21,3	29,2	284	289	366	504
400	3,5	85	89	62	41	19,1	24,0	30,1	42,7	408	414	529	739
	1,75	99	103	72	48	17,9	22,6	28,4	38,9	383	389	491	673
500	3,5	93	96	68	45	20,9	26,4	33,6	46,6	448	454	580	809
	1,75	108	113	80	53	19,6	24,8	31,1	42,3	420	427	537	734

Model	Primary flow rate	DHW produced in the first 10 minutes in lt/10' input 10 °C output 45 °C, storage at t2 and primary at T1				DHW produced in the first hour in lt/60' input 10 °C output 45 °C, storage at t2 and primary at T1				Heat exchanger pressure drop	
	[m³/h]	T1/t2				T1/t2				[mmH$_2$O]	[mbar]
		55/50	65/60	70/60	80/60	55/50	65/60	70/60	80/60		
150	2	202	245	254	270	321	323	366	446	342	34
	1	199	242	250	265	309	311	349	418	100	10
200	2,5	258	313	325	346	410	413	470	569	623	61
	1,25	255	311	321	339	397	400	448	536	183	18
300	3	386	470	484	511	578	581	650	777	1057	104
	1,5	382	467	480	503	562	566	628	738	311	30
400	3,5	554	676	695	730	812	817	909	1077	1817	178
	1,75	550	672	689	719	792	797	879	1024	536	53
500	3,5	650	794	815	853	933	938	1039	1222	1989	195
	1,75	645	790	808	841	911	916	1004	1162	587	58

HEAT EXCHANGERS PRESSURE DROP (UPPER)



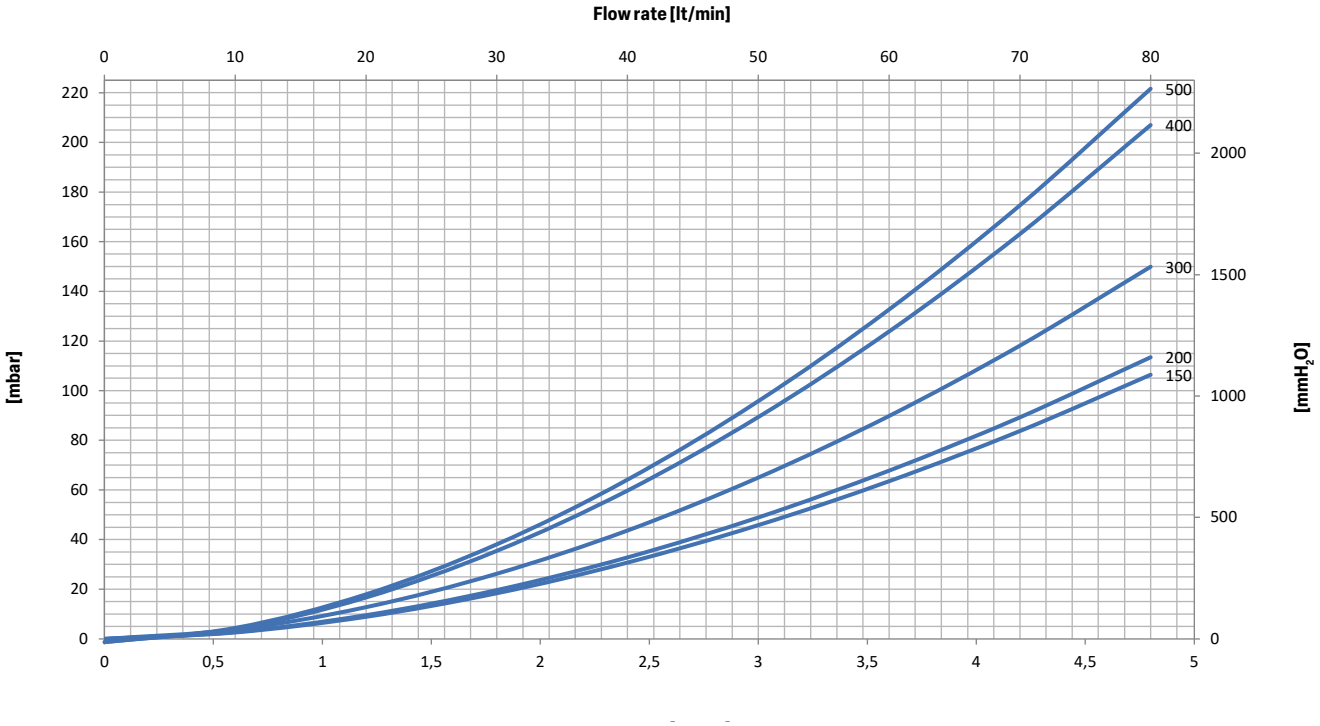

HEAT EXCHANGERS PRESSURE DROP (LOWER)

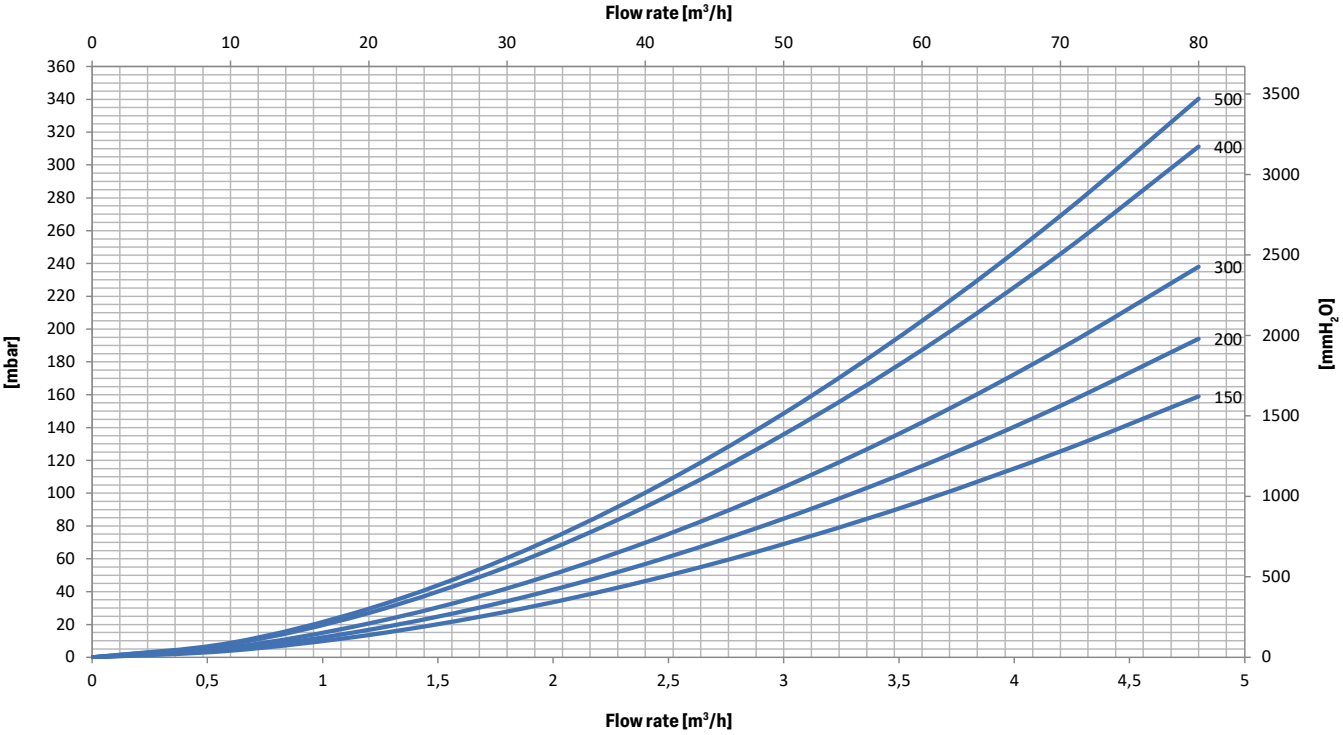

BOLLY® **2 AP INOX**

HEAT EXCHANGERS TECHNICAL DATA (UPPER)



Heat Exchanger output referred to temperature and flow rate of primary circuit and with secondary at 10/45°C at maximum withdrawal of producible DHW (Upper limit of the curves referred to maximum primary flow rate in the heat exchanger, while the lower limit in the curves refer to the minimum primary flow rate).

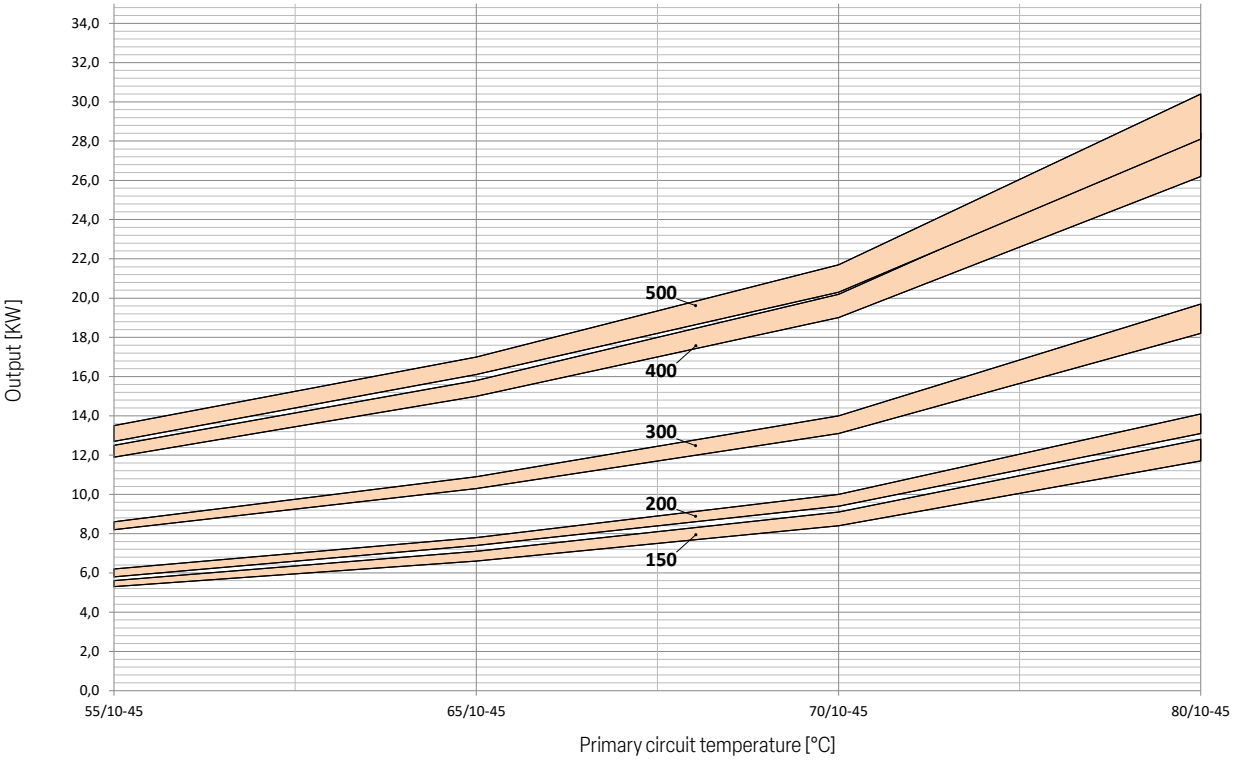

Model Bolly® 2 AP INOX	150		200		300		400		500	
Flow rate [m³/h]	MAX	MIN	MAX	MIN	MAX	MIN	MAX	MIN	MAX	MIN
	2	1	2,5	1,25	3	1,5	3,5	1,75	3,5	1,75

HEAT EXCHANGERS TECHNICAL DATA (LOWER)

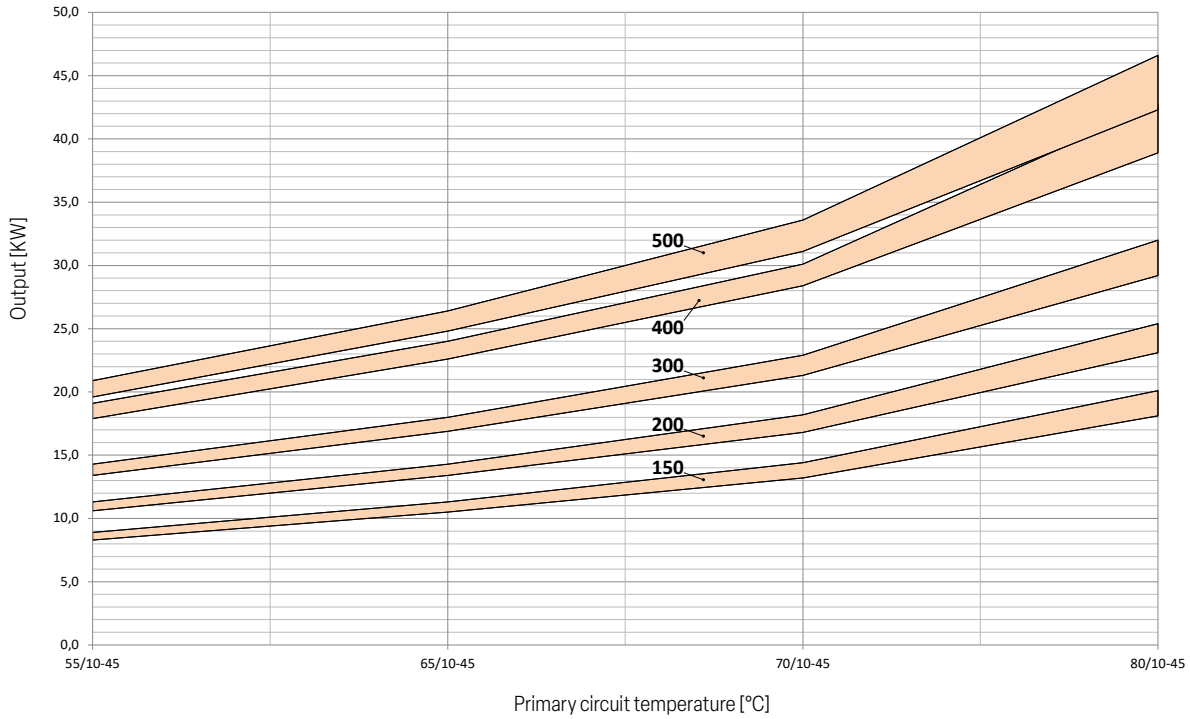

Model Bolly® 2 AP INOX	150		200		300		400		500	
Flow rate [m³/h]	MAX	MIN	MAX	MIN	MAX	MIN	MAX	MIN	MAX	MIN
	2	1	2,5	1,25	3	1,5	3,5	1,75	3,5	1,75

BOLLY® **2 AP INOX**



EXAMPLE OF INSTALLATION WITH **BOLLY® 2 AP INOX**

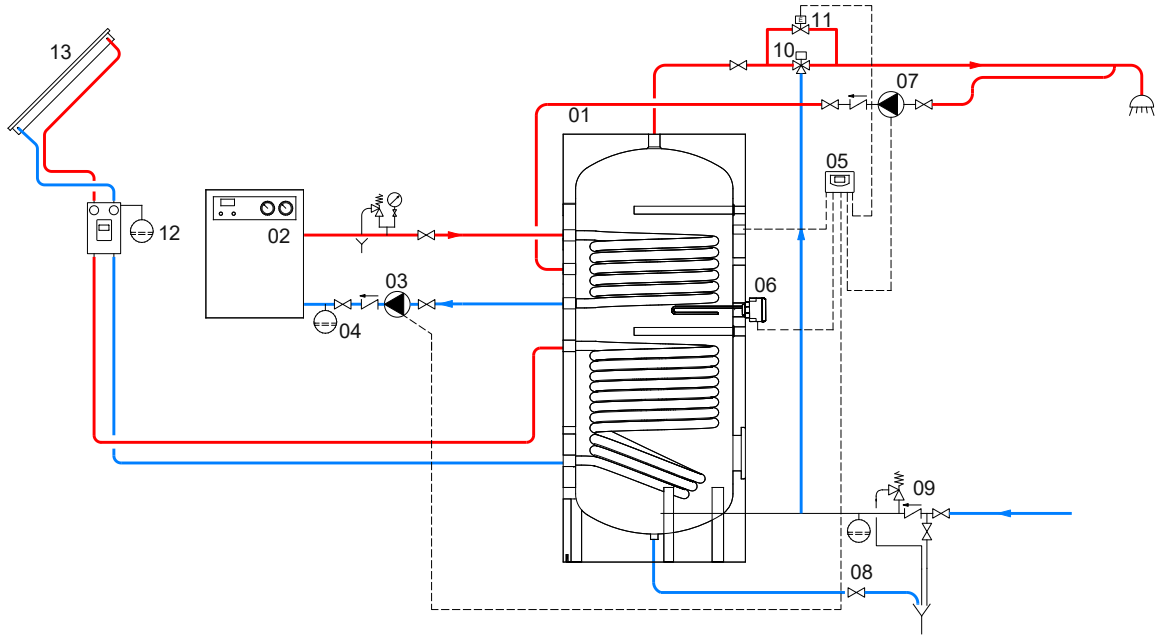

1	BOLLY® 2 AP INOX	5	FULL CONTROL electronic unit / thermostat	9	Hydraulic safety group	13	Solar panels
2	Generator	6	Electric immersion heater (optional)	10	Thermostatic mixing valve		
3	Circulation group	7	D.H.W. recirculation group	11	By-pass solenoid valve		
4	Expansion vessel	8	Blowdown valve	12	Solar system circulation group		

The following schemes are purely illustrative. To realize the installation, always refer to a qualified technician.

BOLLY® 1 XL INOX

STAINLESS STEEL 316L DOMESTIC HOT WATER CALORIFIER
WITH 1 FIXED OVERSIZE STAINLESS STEEL HEAT EXCHANGER



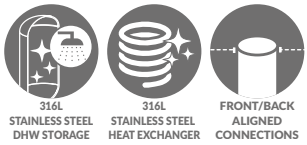

APPLICATION
Production and storage of domestic hot water (DHW).
All the connections are aligned on the front and on the back for quick and easy installation.

MATERIAL
Stainless Steel 316 L suitable for domestic hot water

HEAT EXCHANGER
Nr. 1 fixed oversize stainless steel heat exchanger with double spiral coil

INSULATION
HARD: High thermal insulation with ecological polyurethane hard foam.
SOFT (DISMOUNTABLE): NOFIRE® polyester fleece 100% made of recyclable material, with high thermal insulation. Fire resistance class B-s2d0 according to EN 13501.
HARD FOAM (CLASS "A" MODELS): hard polyurethane foam for high thermal insulation with a vacuum sheet of highly insulating material.Grey PVC external lining.

CATHODE PROTECTION
Magnesium anode
Models > 800 Nr. 2 magnesium anodes.

DRAIN
External confluence through drain connection

GASKET- FLANGE PLATE
Silicone gaskets suitable for water intended for human consumption (tested according to 98/83/CE); Flange for inspection and counterflange (standard) with provision for electric immersion heater.

WARRANTY
5 years (See general sales conditions and warranty)

ACCESSORIES AND SPARE PARTS
See Accessories section for the entire list.

	Model	Art. Nr.	Heat exchangers surface [m²]	ErP ENERGY EFFICIENCY CLASS
BOLLY® 1 XL XB HARD FOAM INSULATION	200	3104052010200	1,7	B
	300	3104052010201	2,7	B
	500	3104052010202	4	B
BOLLY® 1 XL XC DISMOUNTABLE SOFT FLEECE INSULATION	800	3103052010485	5,8	C
	1000	3103052010486	5,8	C
BOLLY® 1 XL XB - (class A) HARD FOAM INSULATION	200	3104052010220	1,7	A
	300	3104052010221	2,7	A
	500	3104052010222	4	A

ACCESSORIES

ELECTRIC IMMERSION HEATERS

Mod.	Heated volume by electric immersion heater [lt]	MONOPHASE 1,5 kW	MONOPHASE 2 kW	MONOPHASE 3 kW	THREEPHASE 4 kW	THREEPHASE 5 kW	THREEPHASE 6 kW	THREEPHASE 9 kW	THREEPHASE 12 kW
		5240000000051	5240000000052	5240000000053	5240000000047	5240000000048	5240000000049	5240000000050	5240000000031
		Ignition time from 10 °C to 45 °C with electric immersion heaters [min]			Ignition time from 10 °C to 45 °C with electric immersion heaters [min]				
200	161	288	216	144	//	//	//	//	//
300	237	425	319	213	159	//	//	//	//
500	417	746	560	373	280	224	//	//	//
800	668	1197	898	598	449	359	299	199	//
1000	874	1565	1174	783	587	470	391	261	196

FULL CONTROL electronic unit (mounted on tank)

Art. Nr.	for models
5220280000004	XC
5220280000005	XB



HEAT MANAGER + electric immersion heater 1,5 kW + probe +3m cable

Art. Nr.	Output [kW]
5240000000074	1,5
5240000000075	2
5240000000076	3



Products designed and manufactured for using within temperature and pressure limits in accordance to Art. 4.3 Directive 2014/68/EU (P.E.D.)

BOLLY® 1 XL INOX

STAINLESS STEEL 316L DOMESTIC HOT WATER CALORIFIER
WITH 1 FIXED OVERSIZE STAINLESS STEEL HEAT EXCHANGER

STORAGE		HEAT EXCHANGER	
Pmax	Tmax	Pmax	Tmax
6 bar	95 °C	12 bar	110 °C

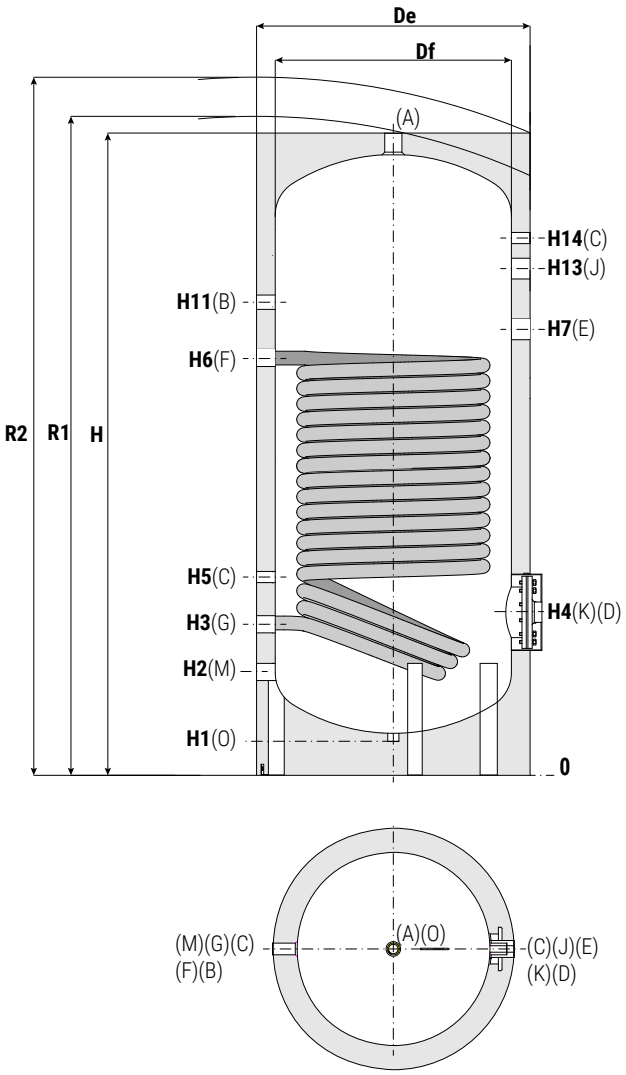

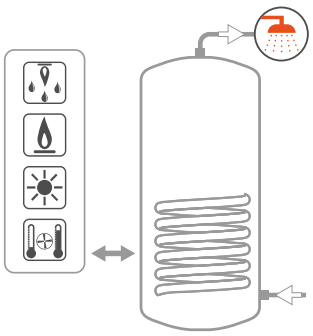

A	Domestic hot water outlet
B	Recirculation
C	Connection for instrumentation G 1/2" F
D	Connection for electric immersion heater
E	Connection for magnesium anode G 1"1/4 F
F	Primary circuit inlet G 1" F
G	Primary circuit outlet G 1" F
J	Connection for 2nd magnesium anode G 1"1/4 F (only for models standard > 800)
K	Flange for inspection and counterflange (standard) with provision for electric immersion heater 1"1/2
M	Domestic cold water circuit inlet
O	Drain

BOLLY® 1 XL INOX - 1 XL INOX CLASS A (HARD FOAM INSULATION -XB)

Model	Volume	Weight	Df	De	H	R2	H1	H2	H3	H4	H5	H6	H7	H11	H14
	[lt]	[kg]	[mm]												
200	192	47	450	550	1440	1510	65	210	320	320	430	845	900	1090	1190
300	293	75	550	650	1495	1630	70	240	350	380	460	1059	1110	1170	1220
500	503	110	650	750	1796	1950	65	260	370	405	480	1285	1380	1400	1490

Model	A	B	C	D	E	F	G	M	O	K
	Connections F									[mm]
200	1"	3/4"	1"1/2	1"1/2	1"1/4	1"	1"	3/4"	1/2"	Øi120/Øe180
300	1"	1"	1"1/2	1"1/2	1"1/4	1"	1"	1"	1/2"	Øi120/Øe180
500	1"	1"	1"1/2	1"1/2	1"1/4	1"	1"	1"	1/2"	Øi120/Øe180

Net volume data according to EN 15332 available on product label.

BOLLY® 1 XL INOX - DISMOUNTABLE SOFT FLEECE INSULATION (XC)

Model	Volume	Weight	Df	De	H	R1	R2	H1	H2	H3	H4	H5	H6	H7	H11	H13	H14
	[lt]	[kg]	[mm]														
800	759	169	790	990	1943	2180	2195	114	323	443	478	553	1403	1483	1513	//	1563
1000	902	183	790	990	2193	2410	2425	114	323	443	478	553	1613	1463	1613	1703	1813

Model	A	B	C	D	E	F	G	J	M	O	K
	Connections F										[mm]
800	1"1/4	1"	1"1/2	2"	1"1/4	1"	1"	//	1"	3/4"	Øi120/Øe180
1000	1"1/2	1"	1"1/2	2"	1"1/4	1"	1"	1"1/4	1"1/4	3/4"	Øi120/Øe180

Net volume data according to EN 15332 available on product label.

Products designed and manufactured for using within temperature and pressure limits in accordance to Art. 4.3 Directive 2014/68/EU (P.E.D.)

BOLLY® **1 XL INOX**

HEAT EXCHANGERS TECHNICAL DATA



Data have been calculated on following basis:
1) Primary circuit at T1 and proper energy source;
2) Production of DHW in continuous from 10 °C to t2;
3) DHW that can be taken in the first 10' and in the first hour from storage at t2, input 10 °C and output 45 °C;
4) Non-scaling sanitary water

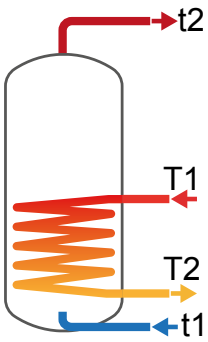

Model	Primary flow rate	Ignition time (minutes) from 10 °C to t2 and primary at T1				Maximum power exchange (kW) with primary at T1, secondary within 10-45 °C and constant use of DHW production				DHW continuous production lt/h within 10-45 °C and primary at T1HW production			
	[m³/h]	T1/t2				T1				T1			
		55/50	65/60	70/60	80/60	55	65	70	80	55	65	70	80
200	3	47	49	34	22	15,6	19,7	25,1	35,0	334	338	433	606
	1,5	54	57	40	26	14,6	18,5	23,3	31,8	312	317	400	550
300	4	44	46	32	21	25,7	32,4	41,3	57,2	553	561	715	994
	2	51	54	38	25	24,0	30,6	38,3	52,0	519	528	663	902
500	5	52	54	38	25	38,1	48,1	61,0	84,3	823	835	1060	1468
	2,5	61	64	45	30	35,8	45,4	56,6	76,4	773	787	983	1329
800	6	55	57	41	27	55,1	69,6	87,9	120,9	1192	1210	1531	2107
	3	66	69	49	33	51,7	65,5	81,3	108,9	1118	1139	1416	1897
1000	6	65	68	48	32	55,1	69,6	87,9	120,9	1192	1210	1531	2107
	3	78	82	59	39	51,7	65,5	81,3	108,9	1118	1139	1415	1897

Model	Primary flow rate	DHW produced in the first 10 minutes in lt/10' input 10 °C output 45 °C, storage at t2 and primary at T1				DHW produced in the first hour in lt/60' input 10 °C output 45 °C, storage at t2 and primary at T1				Heat exchanger pressure drop	
	[m³/h]	T1/t2				T1/t2				[mmH$_2$O]	[mbar]
		55/50	65/60	70/60	80/60	55/50	65/60	70/60	80/60		
200	3	274	329	345	374	485	543	619	758	1155	113
	1,5	270	326	340	365	468	526	593	713	340	33
300	4	427	512	538	584	777	867	991	1214	3059	299
	2	421	507	529	569	750	841	949	1140	903	88
500	5	712	858	895	963	1233	1387	1567	1893	6614	648
	2,5	704	850	882	940	1193	1348	1505	1782	1957	192
800	6	1066	1286	1339	1435	1821	2052	2309	2770	13081	1283
	3	1054	1274	1320	1400	1762	1995	2217	2602	3875	380
1000	6	1230	1490	1544	1640	1984	2257	2513	2974	13081	1283
	3	1217	1478	1524	1605	1925	2200	2421	2806	3875	380

HEAT EXCHANGERS PRESSURE DROP

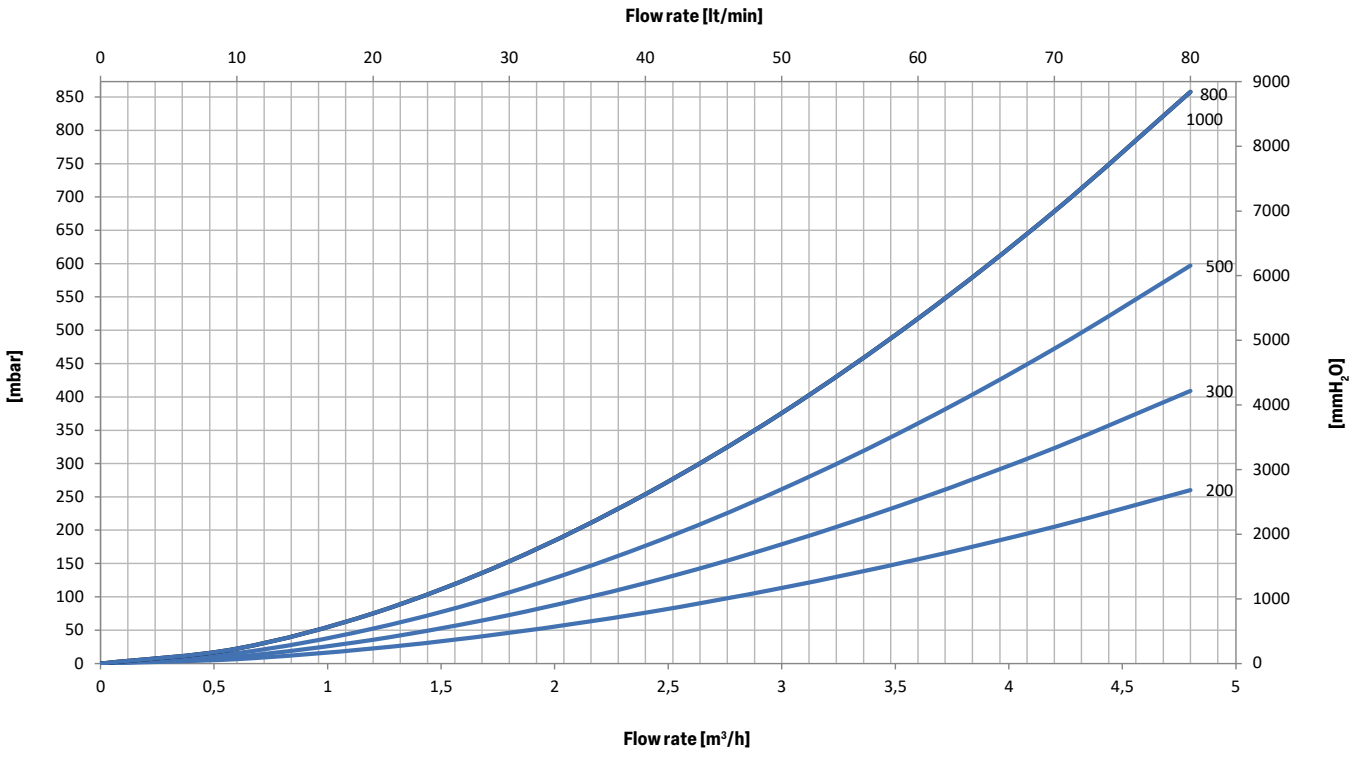

BOLLY® **1 XL INOX**

HEAT EXCHANGERS TECHNICAL DATA



Heat Exchanger output referred to temperature and flow rate of primary circuit and with secondary at 10/45°C at maximum withdrawal of producible DHW (Upper limit of the curves referred to maximum primary flow rate in the heat exchanger, while the lower limit in the curves refer to the minimum primary flow rate)

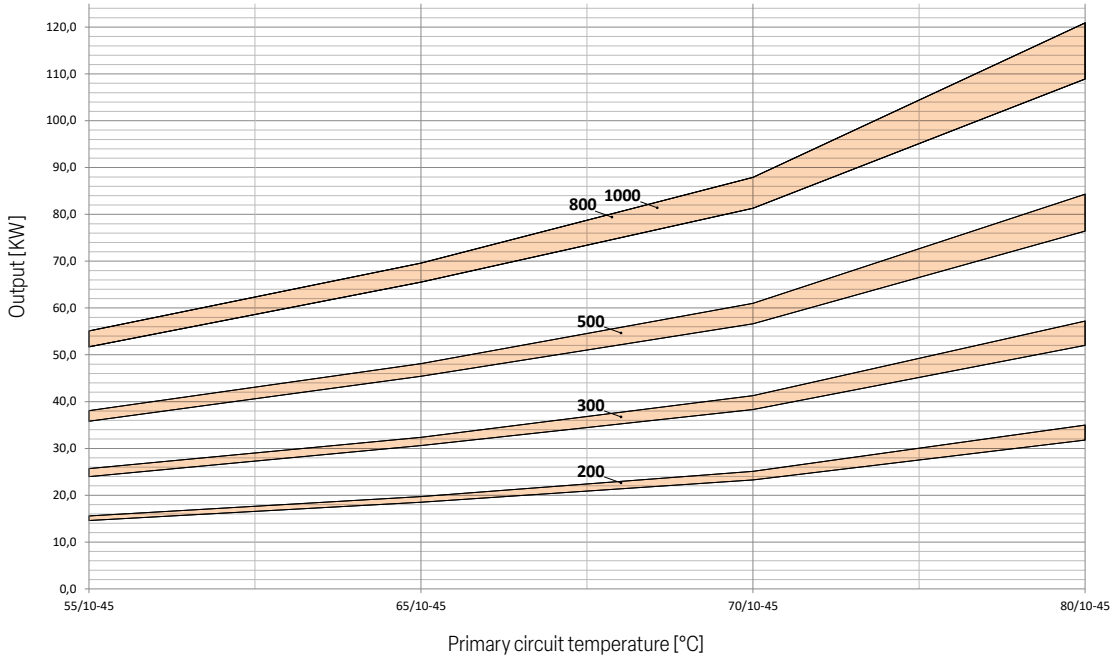

Model Bolly® 1 XL inox	200		300		500		800		1000	
Flow rate [m³/h]	MAX	MIN	MAX	MIN	MAX	MIN	MAX	MIN	MAX	MIN
	2,5	1,25	3	1,5	3,5	1,75	6	3	6	3

EXAMPLE OF INSTALLATION WITH **BOLLY® 1 XL INOX**

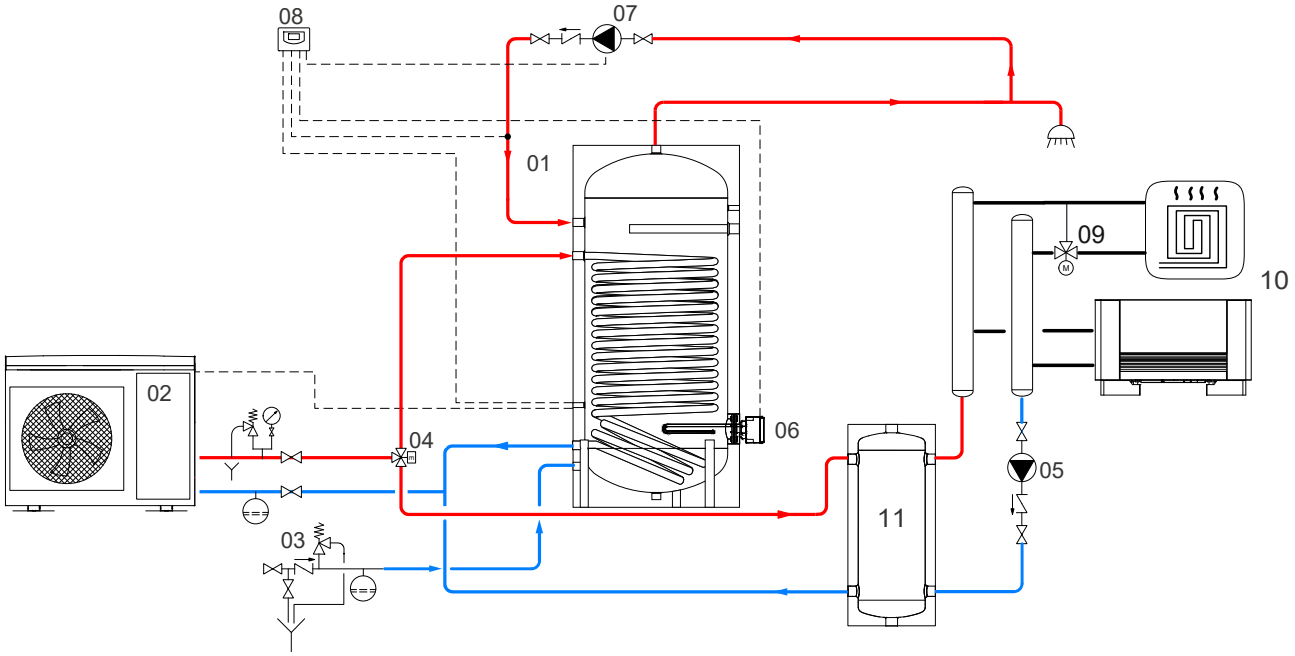

1	BOLLY® 1 XL INOX	4	Motorized 3-way valve	7	D.H.W. recirculation group	10	Heating units
2	Generator (Heat pump)	5	Circulation group for heating/cooling system	8	FULL CONTROL electronic unit / thermostat	11	Buffer tank
3	Hydraulic safety group	6	Electric immersion heater	9	Thermostatic mixing valve		

The following schemes are purely illustrative. To realize the installation, always refer to a qualified technician.

BOLLY® **2 XL INOX**

STAINLESS STEEL 316L DOMESTIC HOT WATER CALORIFIER
WITH 2 FIXED OVERSIZE STAINLESS STEEL HEAT EXCHANGERS





APPLICATION
Production and storage of domestic hot water (DHW).
All the connections are aligned on the front and on the back for quick and easy installation.

MATERIAL
Stainless Steel 316 L suitable for domestic hot water

HEAT EXCHANGER
Nr. 2 fixed oversize stainless steel heat exchangers with double spiral coil.

INSULATION
HARD: High thermal insulation with ecological polyurethane hard foam.
SOFT (DISMOUNTABLE): NOFIRE® polyester fleece 100% made of recyclable material, with high thermal insulation. Fire resistance class B-s2d0 according to EN 13501.
HARD FOAM (CLASS "A" MODELS): hard polyurethane foam for high thermal insulation with a vacuum sheet of highly insulating material.
Grey PVC external lining.

CATHODE PROTECTION
Magnesium anode
Models > 800 Nr. Nr. 2 magnesium anodes.

DRAIN
External confluence through drain connection

GASKET- FLANGE PLATE
Silicone gaskets suitable for water intended for human consumption (tested according to 98/83/CE); Flange for inspection and counterflange (standard) with provision for electric immersion heater.

WARRANTY
5 years (See general sales conditions and warranty)

ACCESSORIES AND SPARE PARTS
See Accessories section for the entire list.

	Model	Art. Nr.	Heat exchangers surface [m²] Upper	Heat exchangers surface [m²] Lower	ErP ENERGY EFFICIENCY CLASS
BOLLY® 2 XL XB HARD FOAM INSULATION	**200**	3134052010000	1,4	0,6	**B**
	300	3134052010001	2,5	0,8	**B**
	500	3134052010002	4,1	1,42	**B**
BOLLY® 2 XL XC DISMOUNTABLE SOFT FLEECE INSULATION	**800**	3138052010050	5	1,8	**C**
	1000	3138052010051	5,2	2	**C**
BOLLY® 2 XL WB class A HARD FOAM INSULATION	**200**	3134052010020	1,4	0,6	**A**
	300	3134052010021	2,5	0,8	**A**
	500	3134052010022	4,1	1,42	**A**

ACCESSORIES

ELECTRIC IMMERSION HEATERS

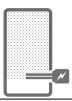

Mod.	Heated volume by electric immersion heater [lt]	MONOPHASE 1,5 kW	MONOPHASE 2 kW	MONOPHASE 3 kW	THREEPHASE 4 kW	THREEPHASE 5 kW	THREEPHASE 6 kW	THREEPHASE 9 kW	THREEPHASE 12 kW
		5240000000051	5240000000052	5240000000053	5240000000047	5240000000048	5240000000049	5240000000050	5240000000031
		Ignition time from 10 °C to 45 °C with electric immersion heaters [min]			Ignition time from 10 °C to 45 °C with electric immersion heaters [min]				
200	161	288	216	144	//	//	//	//	//
300	237	425	319	213	159	//	//	//	//
500	417	746	560	373	280	224	//	//	//
800	668	1197	898	598	449	359	299	199	//
1000	874	1565	1174	783	587	470	391	261	196

FULL CONTROL electronic unit (mounted on tank)

Art. Nr.	for models
5220280000004	XC
5220280000005	XB



HEAT MANAGER + electric immersion heater 1,5 kW + probe +3m cable

Art. Nr.	Output [kW]
5240000000074	1,5
5240000000075	2
5240000000076	3



Products designed and manufactured for using within temperature and pressure limits in accordance to Art. 4.3 Directive 2014/68/EU (P.E.D.)

BOLLY® **2 XL INOX**

STAINLESS STEEL 316L DOMESTIC HOT WATER CALORIFIER
WITH 2 FIXED OVERSIZE STAINLESS STEEL HEAT EXCHANGERS

STORAGE		HEAT EXCHANGER	
Pmax	Tmax	Pmax	Tmax
6 bar	95 °C	12 bar	110 °C

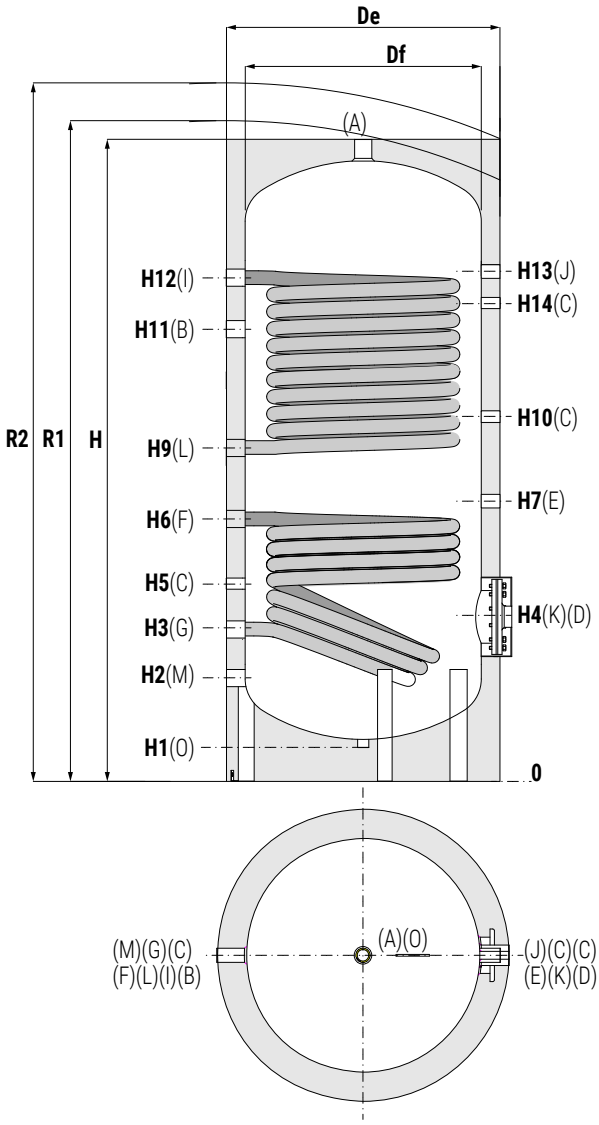

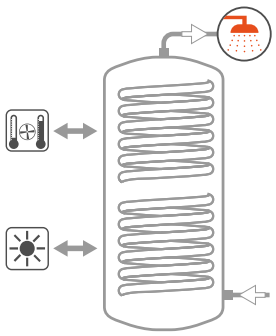

A	Domestic hot water outlet
B	Recirculation
C	Connection for instrumentation G 1/2" F
D	Connection for electric immersion heater
E	Connection for magnesium anode G 1"1/4 F
F	Lower heat exchanger inlet G 1" F
G	Lower heat exchanger outlet G 1" F
J	Connection for 2nd magnesium anode G 1"1/4 F (only for models standard > 800)
K	Flange for inspection and counterflange (standard) with provision for electric immersion heater 1"1/2
M	Domestic cold water circuit inlet
L	Upper heat exchanger outlet G 1" F
I	Upper heat exchanger inlet G 1" F
O	Drain

BOLLY® 2 XL INOX - 2 XL INOX CLASS A (HARD FOAM INSULATION (XB)

Model	Volume	Weight	Df	De	H	R2	H1	H2	H3	H4	H5	H6	H7	H9	H10	H11	H12	H14
	[lt]	[kg]	[mm]															
200	192	43	450	550	1440	1510	65	210	320	320	430	539	660	705	886	1094	1190	1200
300	293	69	550	650	1495	1630	70	240	345	380	459	559	590	669	896	1109	1219	1230
500	503	99	650	750	1796	1950	65	260	480	400	480	666	690	795	1099	1355	1479	1490

Model	A	B	C	D	E	F	G	M	O	L	I	K
	Connections F											[mm]
200	1"	3/4"	1/2"	1"1/2	1"1/4	1"	1"	3/4"	1/2"	1"	1"	Øi120/Øe180
300	1"	1"	1/2"	1"1/2	1"1/4	1"	1"	1"	1/2"	1"	1"	Øi120/Øe180
500	1"	1"	1/2"	1"1/2	1"1/4	1"	1"	1"	1/2"	1"	1"	Øi120/Øe180

Net volume data according to EN 15332 available on product label.

BOLLY® 2 XL INOX - DISMOUNTABLE SOFT FLEECE INSULATION (XC)

Model	Volume	Weight	Df	De	H	R1	R2	H1	H2	H3	H4	H5	H6	H7	H9	H10	H11	H12	H13	H14
	[lt]	[kg]	[mm]																	
800	759	156	790	990	1943	2180	2195	114	323	443	473	553	718	763	825	1163	1163	1573	//	1573
1000	902	193	790	990	2193	2410	2425	114	323	443	473	553	802	862	918	1162	1557	1792	1822	1712

Model	A	B	C	D	E	F	G	J	M	O	L	I	K
						Connections F							[mm]
800	1"1/4	1"	1/2"	1"1/2	1"1/4	1"	1"	//	1"	3/4"	1"	1"	Øi120/Øe180
1000	1"1/4	1"	1/2"	2"	1"1/4	1"	1"	1"1/4	1"	3/4"	1"	1"	Øi120/Øe180

Net volume data according to EN 15332 available on product label.

Products designed and manufactured for using within temperature and pressure limits in accordance to Art. 4.3 Directive 2014/68/EU (P.E.D.)

BOLLY® **2 XL INOX**

HEAT EXCHANGERS TECHNICAL DATA



Data have been calculated on following basis:
1) Primary circuit at T1 and proper energy source;
2) Production of DHW in continuous from 10 °C to t2;
3) DHW that can be taken in the first 10' and in the first hour from storage at t2, input 10 °C and output 45 °C;
4) Non-scaling sanitary water

UPPER HEAT EXCHANGER

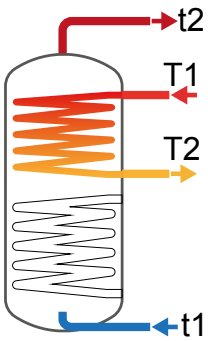

Model	Primary flow rate	Ignition time (minutes) from 10 °C to t2 and primary at T1				Maximum power exchange (kW) with primary at T1, secondary within 10-45 °C and constant use of DHW production				DHW continuous production lt/h within 10-45 °C and primary at T1HW production			
	[m³/h]	T1/t2				T1				T1			
		55/50	65/60	70/60	80/60	55	65	70	80	55	65	70	80
200	3	29	31	21	14	13,3	16,8	21,5	30,0	284	287	369	518
	1,5	34	35	25	16	12,5	15,8	19,9	27,4	266	270	342	473
300	4	30	31	22	14	20,4	25,8	32,8	45,7	438	444	567	792
	2	35	36	26	17	18,8	23,9	29,9	40,9	403	410	517	709
500	5	35	36	26	17	32,7	41,2	52,3	72,5	704	714	908	1261
	2,5	41	43	31	20	30,2	38,3	47,8	64,9	651	663	830	1128
800	6	41	42	30	20	46,7	59,0	74,7	103,1	1010	1025	1300	1796
	3	49	51	37	24	43,4	54,9	68,4	92,1	936	954	1189	1604
1000	6	42	44	31	21	48,5	61,3	77,5	106,9	1049	1065	1349	1861
	3	50	53	38	25	45,0	57,0	70,8	95,3	972	990	1232	1660

Model	Primary flow rate	DHW produced in the first 10 minutes in lt/10' input 10 °C output 45 °C, storage at t2 and primary at T1				DHW produced in the first hour in lt/60' input 10 °C output 45 °C, storage at t2 and primary at T1				Heat exchanger pressure drop	
	[m³/h]	T1/t2				T1/t2				[mmH$_2$O]	[mbar]
		55/50	65/60	70/60	80/60	55/50	65/60	70/60	80/60		
200	3	194	195	209	233	374	377	442	562	992	97
	1,5	191	192	204	226	360	363	421	526	291	29
300	4	302	303	323	361	579	584	682	862	2517	247
	2	296	297	315	347	551	557	642	796	742	73
500	5	539	540	573	632	985	993	1148	1430	5813	570
	2,5	530	532	560	609	942	952	1085	1324	1719	169
800	6	867	869	915	998	1507	1519	1739	2135	11318	1110
	3	855	858	897	966	1447	1462	1650	1982	3351	329
1000	6	919	922	969	1054	1583	1596	1823	2233	11759	1153
	3	906	909	950	1021	1522	1536	1730	2072	3482	341

LOWER HEAT EXCHANGER

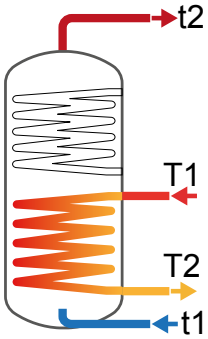

Model	Primary flow rate	Ignition time (minutes) from 10 °C to t2 and primary at T1				Maximum power exchange (kW) with primary at T1, secondary within 10-45 °C and constant use of DHW production				DHW continuous production lt/h within 10-45 °C and primary at T1HW production			
	[m³/h]	T1/t2				T1				T1			
		55/50	65/60	70/60	80/60	55	65	70	80	55	65	70	80
200	3	127	134	90	57	5,8	7,3	9,4	13,3	120	121	158	225
	1,5	140	147	98	63	5,5	6,9	8,9	12,4	113	115	148	210
300	4	147	153	104	67	7,6	9,5	12,2	17,3	158	160	208	296
	2	163	171	116	75	7,1	8,9	11,4	15,9	147	150	192	272
500	5	138	143	100	65	13,5	17,1	21,9	30,8	288	292	376	532
	2,5	154	160	111	73	12,7	16,1	20,4	28,4	270	274	350	490
800	6	162	168	117	76	17,3	21,8	27,9	39,3	370	374	482	681
	3	179	187	131	85	16,3	20,6	26,2	36,4	349	354	452	630
1000	6	174	180	126	82	19,2	24,2	31,0	43,5	411	416	535	754
	3	194	201	141	93	18,1	22,9	29,0	40,2	387	393	500	696

Model	Primary flow rate	DHW produced in the first 10 minutes in lt/10' input 10 °C output 45 °C, storage at t2 and primary at T1				DHW produced in the first hour in lt/60' input 10 °C output 45 °C, storage at t2 and primary at T1				Heat exchanger pressure drop	
	[m³/h]	T1/t2				T1/t2				[mmH$_2$O]	[mbar]
		55/50	65/60	70/60	80/60	55/50	65/60	70/60	80/60		
200	3	293	293	299	310	369	370	399	453	467	46
	1,5	292	292	298	308	363	365	391	441	135	13
300	4	445	445	453	468	545	547	585	655	999	98
	2	443	444	451	464	536	539	572	636	291	28
500	5	767	767	781	807	949	952	1019	1144	2481	243
	2,5	764	764	777	800	935	938	999	1111	728	71
800	6	1146	1147	1165	1198	1380	1383	1470	1629	4264	418
	3	1142	1143	1160	1189	1363	1367	1446	1588	1253	123
1000	6	1357	1358	1378	1414	1617	1621	1717	1892	4705	461
	3	1353	1354	1372	1405	1598	1603	1689	1845	1385	136

BOLLY® **2 XL INOX**

HEAT EXCHANGERS TECHNICAL DATA (UPPER)



Heat Exchanger output referred to temperature and flow rate of primary circuit and with secondary at 10/45°C at maximum withdrawal of producible DHW (Upper limit of the curves referred to maximum primary flow rate in the heat exchanger, while the lower limit in the curves refer to the minimum primary flow rate)

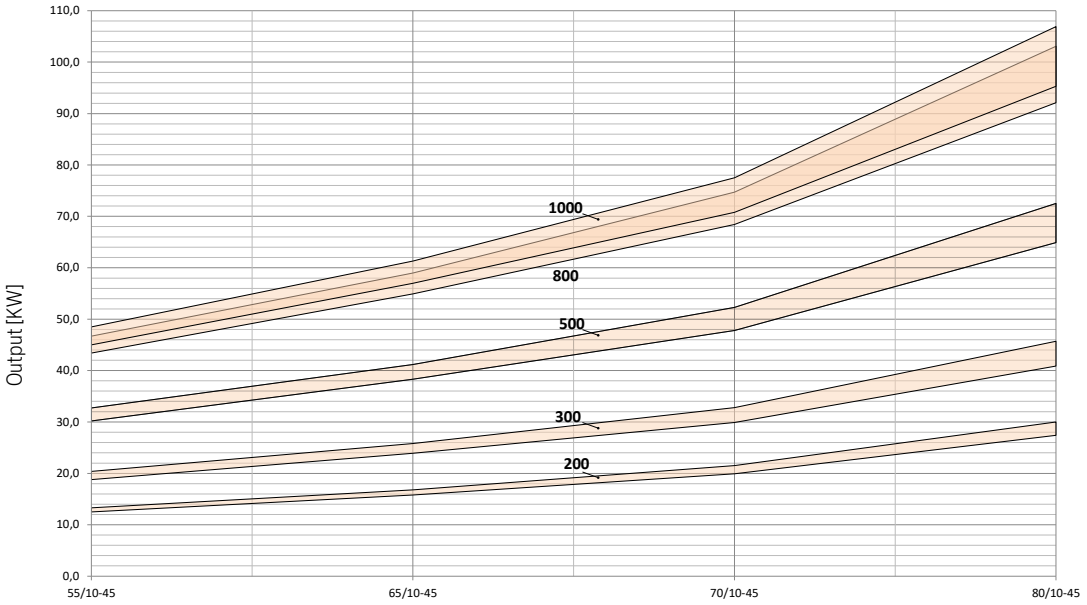

Model Bolly® 2 XL inox	200		300		500		800		1000	
	MAX	MIN	MAX	MIN	MAX	MIN	MAX	MIN	MAX	MIN
Flow rate [m³/h]	2,5	1,25	3	1,5	3,5	1,75	6	3	6	3

HEAT EXCHANGERS TECHNICAL DATA (LOWER)

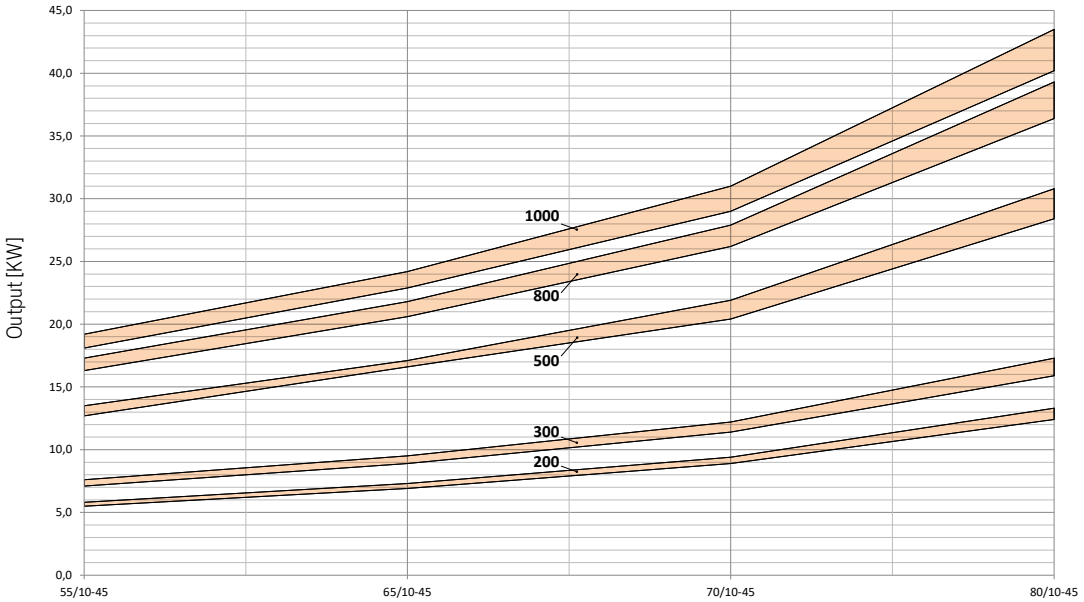

Model Bolly® 2 XL inox	200		300		500		800		1000	
	MAX	MIN	MAX	MIN	MAX	MIN	MAX	MIN	MAX	MIN
Flow rate [m³/h]	2,5	1,25	3	1,5	3,5	1,75	6	3	6	3

BOLLY® **2 XL INOX**

HEAT EXCHANGERS PRESSURE DROP (UPPER)



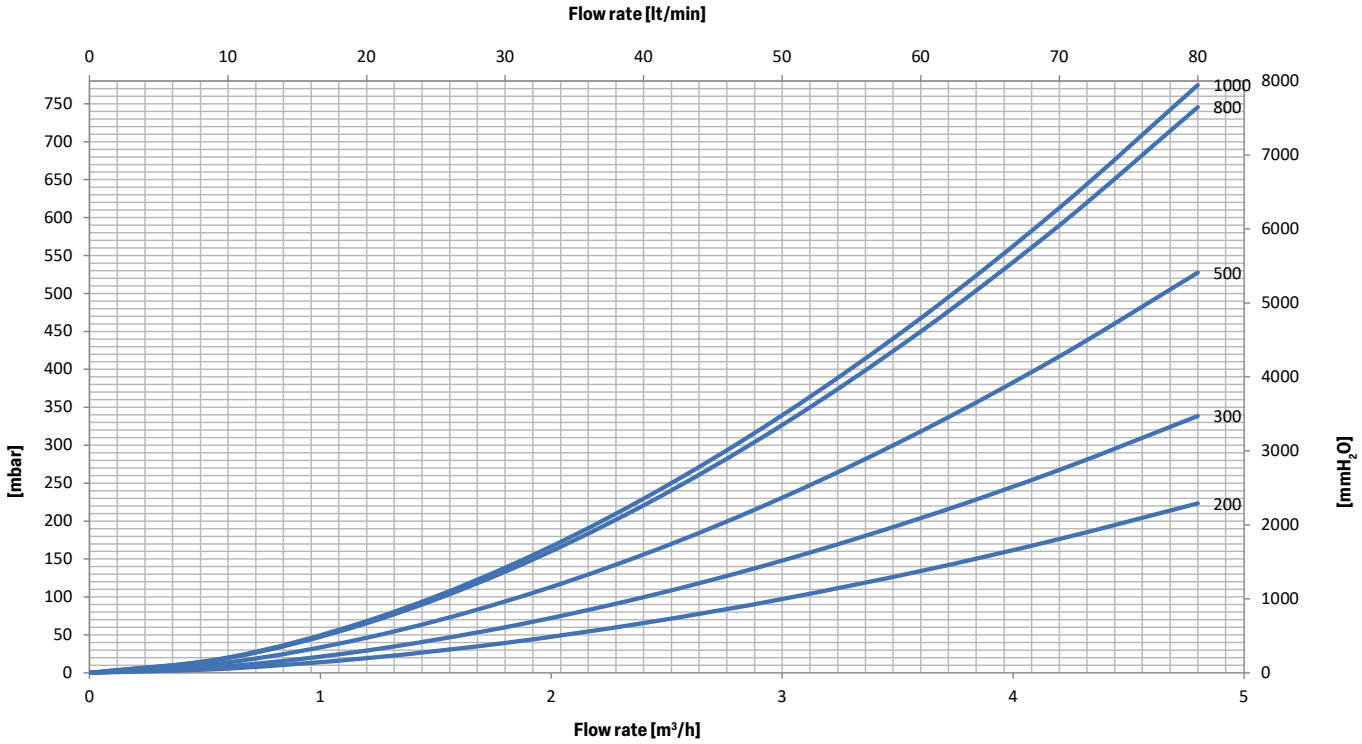

HEAT EXCHANGERS PRESSURE DROP (LOWER)

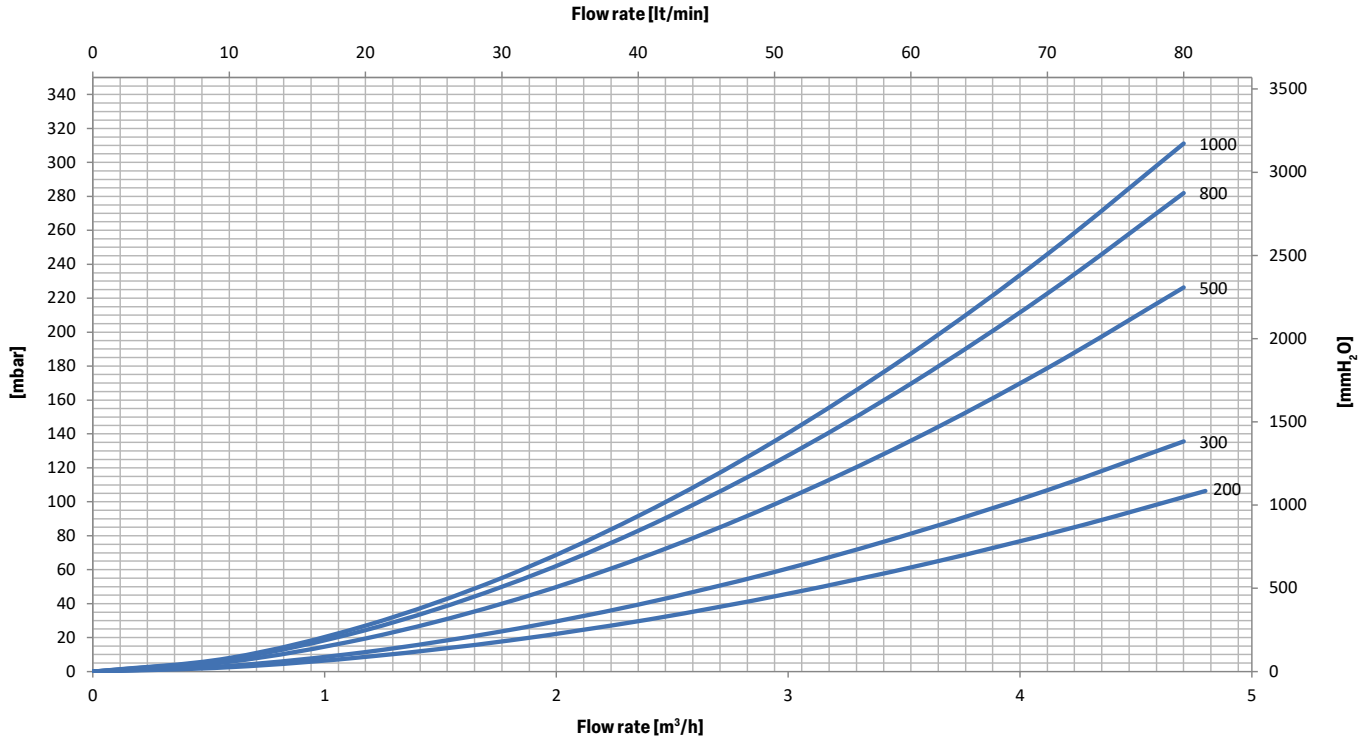



EXAMPLE OF INSTALLATION WITH **BOLLY® 2 XL INOX**

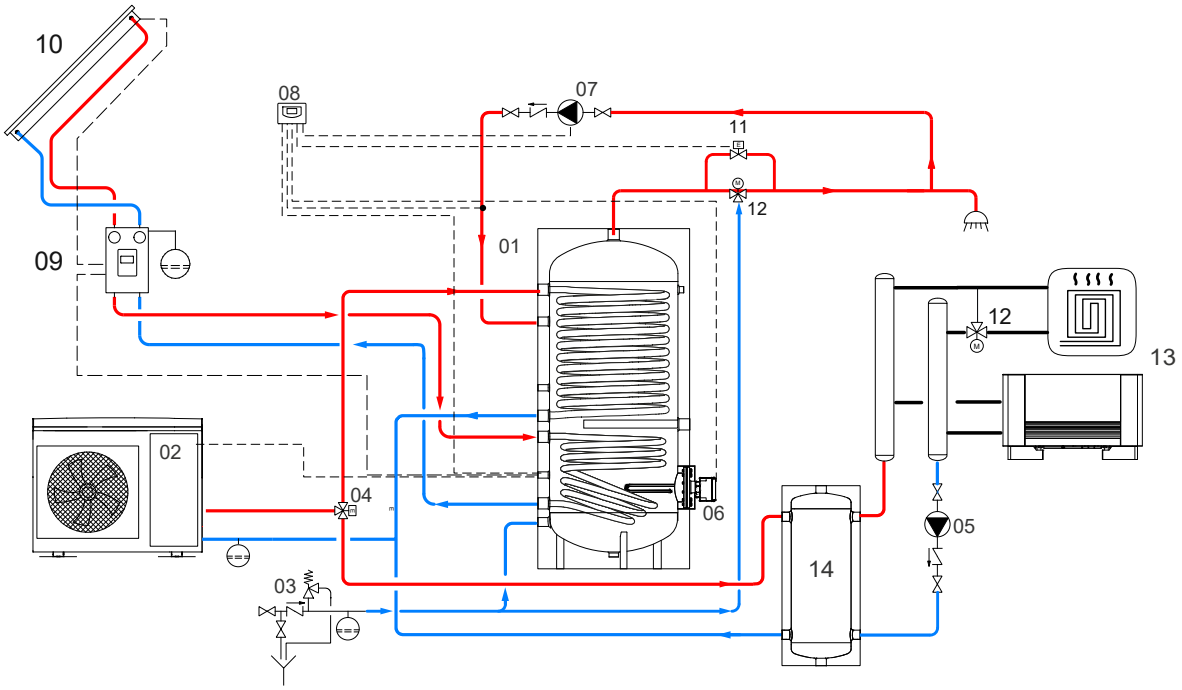

01	Bolly® 2 XL inox	05	Circulation group for heating/cooling system	09	Solar system circulation group	13	Heating units
02	Generator (Heat pump)	06	Electric immersion heater	10	Solar panels	14	Buffer tank
03	Hydraulic safety group	07	D.H.W. recirculation group	11	By-pass solenoid valve		
04	Motorized 3-way valve	08	FULL CONTROL electronic unit/ thermostat	12	Mixing valve		

The following schemes are purely illustrative. To realize the installation, always refer to a qualified technician.

BOLLY® 1 HY XL INOX

STAINLESS STEEL 316L CALORIFIER FOR DHW PRODUCTION
WITH 1 HEAT EXCHANGER AND INTEGRATED BUFFER SPECIFIC FOR HEAT PUMPS



316L STAINLESS STEEL DHW STORAGE

316L STAINLESS STEEL HEAT EXCHANGER

APPLICATION
Production and storage of domestic hot water (DHW). Heating/ cooling buffer tank for heat pumps.

MATERIAL
- *DHW STORAGE:* Stainless Steel 316 L suitable for domestic hot water
- *ENERGY BUFFER hot-cold:* mild steel.

HEAT EXCHANGER
Nr. 1 Fixed oversize stainless steel heat exchanger with double spiral coil.

INSULATION
HARD: High thermal insulation with ecological polyurethane hard foam.
HARD FOAM (CLASS "A" MODELS): hard polyurethane foam for high thermal insulation with a vacuum sheet of highly insulating material.
Grey PVC external lining.

CATHODE PROTECTION (DHW STORAGE)
Magnesium anode.

GASKET- FLANGE PLATE
Silicone gaskets suitable for water intended for human consumption (tested according to 98/83/CE); Flange for inspection and counterflange (standard) with provision for electric immersion heater.

WARRANTY
5 years (See general sales conditions and warranty)

ACCESSORIES AND SPARE PARTS
See Accessories section for the entire list.

	Model	Art. Nr.	Power of combinable heat pump [kWt]	Heat exchangers surface [m²]	ErP ENERGY EFFICIENCY CLASS
BOLLY® 1 HY XL INOX HARD FOAM INSULATION	**300**	3104052010500	9-14	2,7	**B**
	500	3104052010501	14-20	4,0	**C**
BOLLY® 1 HY XL INOX - class A HARD FOAM INSULATION	**300**	3104052010505	9-14	2,7	**A**
	500	3104052010506	14-20	4,0	**A**

ACCESSORIES

ELECTRIC IMMERSION HEATERS

Mod.	Heated volume by electric immersion heater [lt]	MONOPHASE 1,5 kW	MONOPHASE 2 kW	MONOPHASE 3 kW	THREEPHASE 4 kW	THREEPHASE 5 kW
		5240000000051	5240000000052	5240000000053	5240000000047	5240000000048
		Ignition time from 10 °C to 45 °C with electric immersion heaters [min]			Ignition time from 10 °C to 45 °C with electric immersion heaters [min]	
300	237	425	319	213	159	//
500	417	746	560	373	280	224

FULL CONTROL electronic unit (mounted on tank)

Art. Nr.	for models
5220280000005	XB



Thermometer

Art. Nr.
5032240000107
5 units box



Products designed and manufactured for using within temperature and pressure limits in accordance to Art. 4.3 Directive 2014/68/EU (P.E.D.)

BOLLY® **1 HY XL INOX**

STAINLESS STEEL 316L CALORIFIER FOR DHW PRODUCTION
WITH 1 HEAT EXCHANGER AND INTEGRATED BUFFER SPECIFIC FOR HEAT PUMPS

STORAGE		HEAT EXCHANGER		BUFFER TANK	
Pmax	Tmax	Pmax	Tmax	Pmax	Tmax
6 bar	95 °C	12 bar	110 °C	4 bar	-10/+95 °C

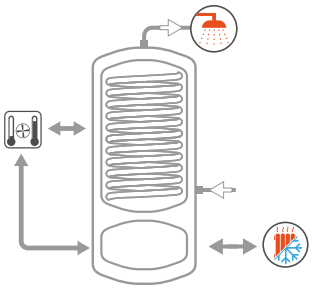

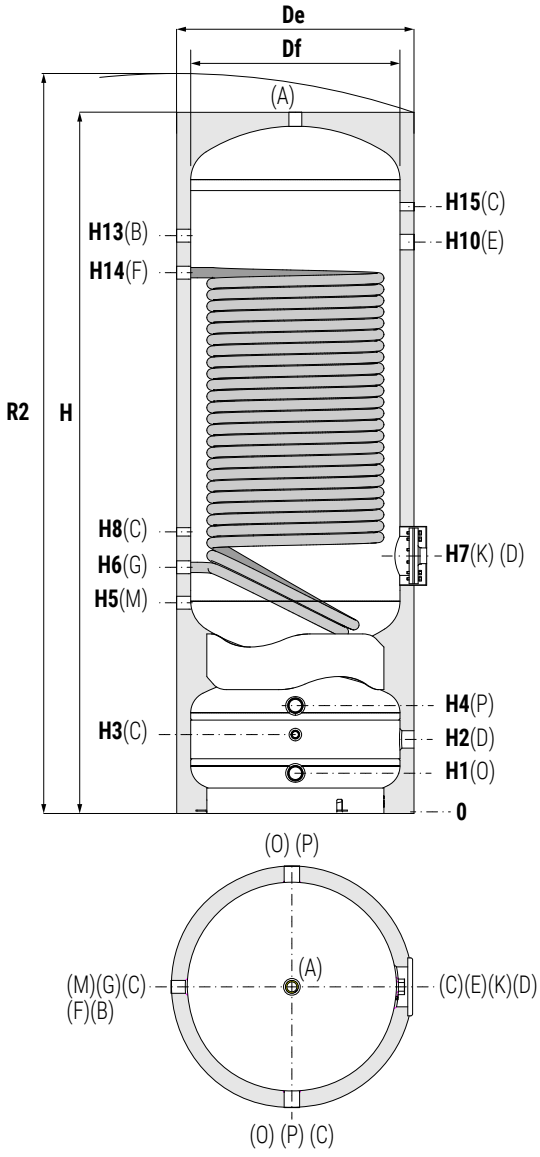

A	Domestic hot water outlet
B	Recirculation / Domestic hot water outlet
C	Connection for instrumentation
D	Connection for electric immersion heater
E	Connection for magnesium anode G 1"1/4 F
F	Primary circuit inlet
G	Primary circuit outlet
K	Flange for inspection and counterflange (standard) with provision for electric immersion heater G 1"1/2 F
M	Domestic cold water circuit inlet
O	Heating return/to generator
P	Heating delivery/from generator

Model	DHW storage volume	Buffer tank volume	Weight	Df	De	H	R2	H1	H2	H3	H4	H5	H6	H7	H8	H10	H13	H14	H15
	[lt]		[kg]	[mm]															
300	293	85	95	550	650	1895	1990	110	232	264	354	640	750	780	860	1510	1570	1459	1620
500	503	115	144	650	750	2185	2310	125	230	245	335	665	765	800	875	1775	1795	1680	1885

Model	A	B	C	D	E	F	G	M	O	P	K
	Connections F										[mm]
300	1"	1"	1"1/2	1"1/2	1"1/4	1"	1"	1"	1"1/4	1"1/4	Øi120/Øe180
500	1"	1"	1"1/2	1"1/2	1"1/4	1"	1"	1"	1"1/4	1"1/4	Øi120/Øe180

Net volume data according to EN 15332 available on product label.

Products designed and manufactured for using within temperature and pressure limits in accordance to Art. 4.3 Directive 2014/68/EU (P.E.D.)

BOLLY® 1 HY XL INOX

HEAT EXCHANGERS TECHNICAL DATA



Data have been calculated on following basis:
1) Primary circuit at T1 and proper energy source;
2) Production of DHW in continuous from 10 °C to t2;
3) DHW that can be taken in the first 10' and in the first hour from storage at t2, input 10 °C and output 45 °C;
4) Non-scaling sanitary water

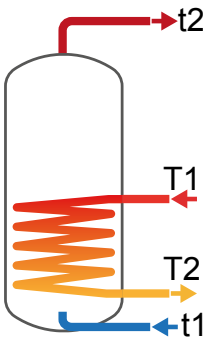

Model	Primary flow rate	Ignition time (minutes) from 10 °C to t2 and primary at T1				Maximum power exchange (kW) with primary at T1, secondary within 10-45 °C and constant use of DHW production				DHW continuous production lt/h within 10-45 °C and primary at T1HW production			
	[m³/h]	T1/t2				T1				T1			
		55/50	65/60	70/60	80/60	55	65	70	80	55	65	70	80
300	4	44	46	32	21	25,7	32,4	41,3	57,2	553	561	715	994
	2	51	54	38	25	24,0	30,6	38,3	52,0	519	528	663	902
500	5	52	54	38	25	38,1	48,1	61,0	84,3	823	835	1060	1468
	2,5	61	64	45	30	35,8	45,4	56,6	76,4	773	787	983	1329

Model	Primary flow rate	DHW produced in the first 10 minutes in lt/10' input 10 °C output 45 °C, storage at t2 and primary at T1				DHW produced in the first hour in lt/60' input 10 °C output 45 °C, storage at t2 and primary at T1				Heat exchanger pressure drop	
	[m³/h]	T1/t2				T1/t2				[mmH$_2$O]	[mbar]
		55/50	65/60	70/60	80/60	55/50	65/60	70/60	80/60		
300	4	427	512	538	584	777	867	991	1214	3059	299
	2	421	507	529	569	750	841	949	1140	903	88
500	5	712	858	895	963	1233	1387	1567	1893	6614	648
	2,5	704	850	882	940	1193	1348	1505	1782	1957	192

HEAT EXCHANGERS PRESSURE DROP

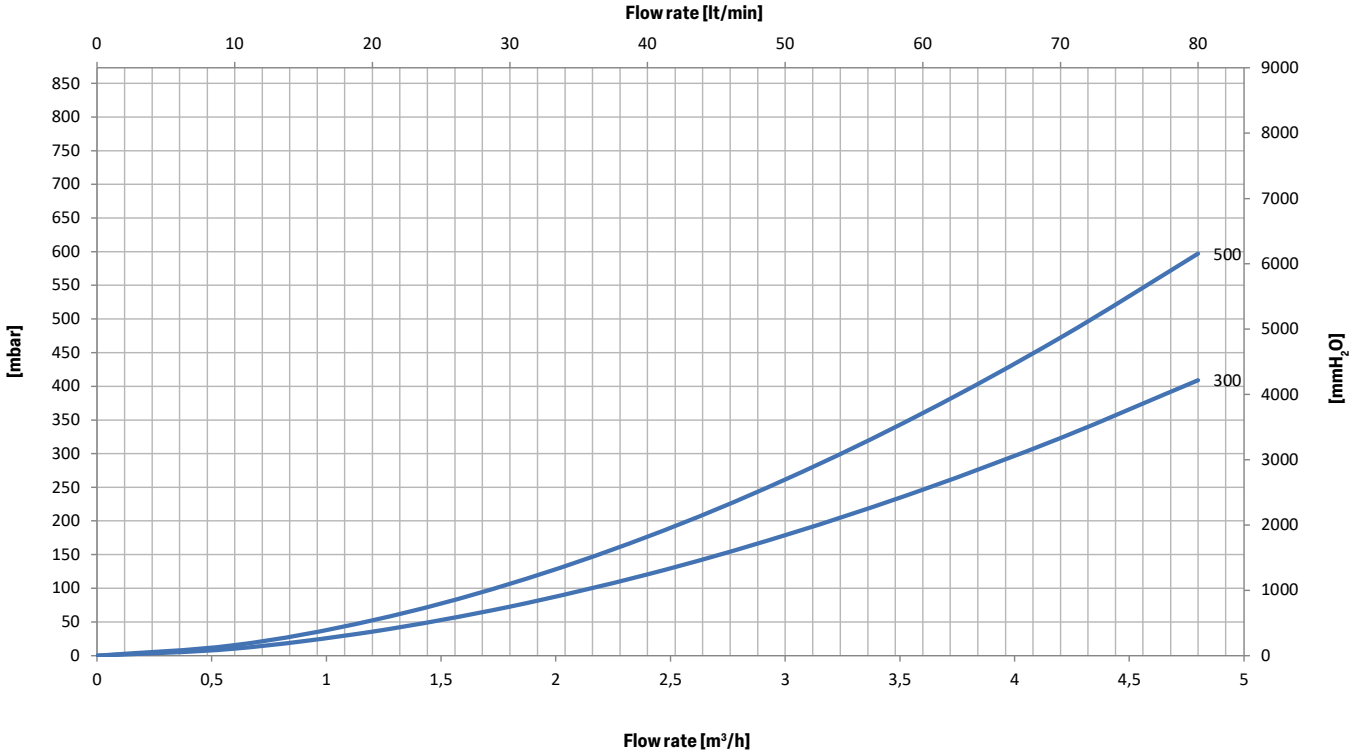

BOLLY® 1 HY XL INOX

HEAT EXCHANGERS TECHNICAL DATA



Heat Exchanger output referred to temperature and flow rate of primary circuit and with secondary at 10/45°C at maximum withdrawal of producible DHW (Upper limit of the curves referred to maximum primary flow rate in the heat exchanger, while the lower limit in the curves refer to the minimum primary flow rate)

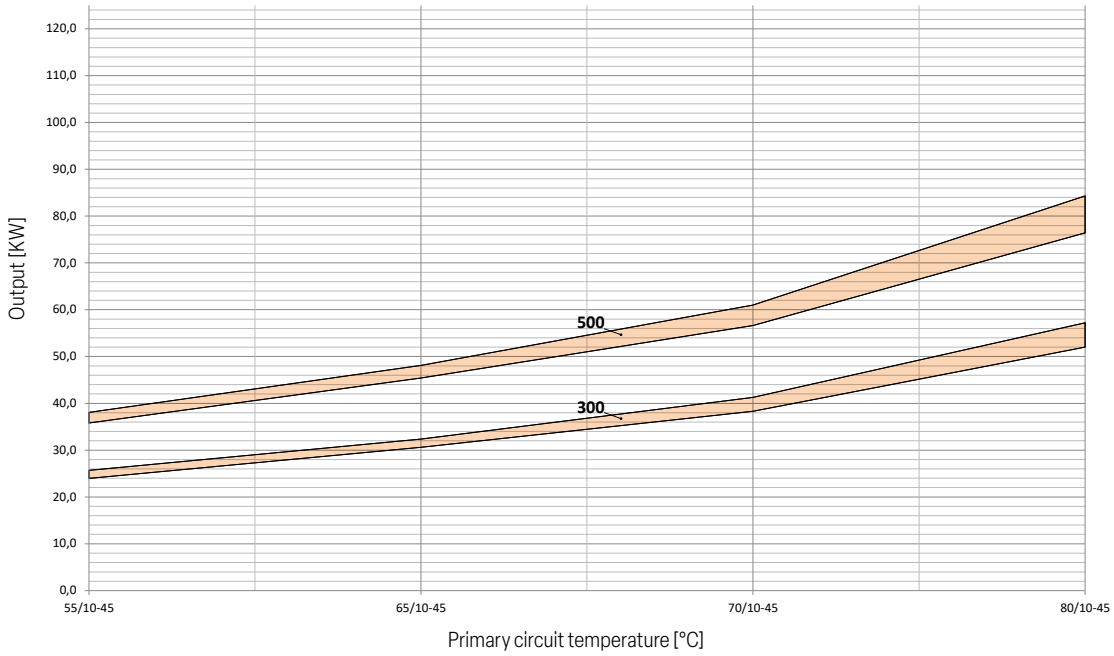

Model BOLLY® 1 HY XL INOX	300		500	
Flow rate [m³/h]	MAX	MIN	MAX	MIN
	3	1,5	3,5	1,75

EXAMPLE OF INSTALLATION WITH **BOLLY® 1 HY XL INOX**

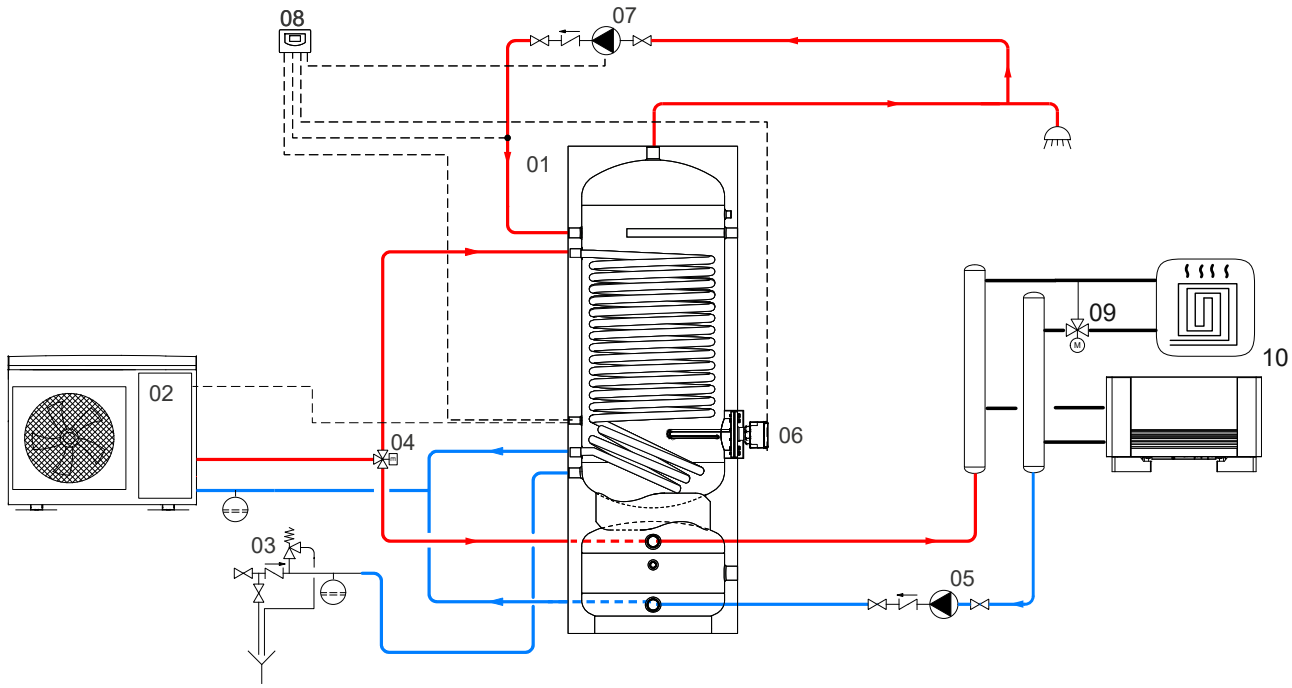

01	BOLLY® 1 HY XL	04	Motorized 3-way valve	07	D.H.W. recirculation group	10	Heating units
02	Generator (Heat pump)	05	Circulation group for heating/cooling system	08	FULL CONTROL electronic unit / thermostat		
03	Hydraulic safety group	06	Electric immersion heater	09	Thermostatic mixing valve		

The following schemes are purely illustrative. To realize the installation, always refer to a qualified technician.

BOLLY® **2 HY XL INOX**

STAINLESS STEEL 316L CALORIFIER FOR DHW PRODUCTION
WITH 2 FIXED EXCHANGERS AND INTEGRATED BUFFER SPECIFIC FOR HEAT PUMPS



316L STAINLESS STEEL DHW STORAGE

316L STAINLESS STEEL HEAT EXCHANGER

APPLICATION
Production and storage of domestic hot water (DHW). Heating/ cooling buffer tank for heat pumps.

MATERIAL
- *DHW STORAGE:* Stainless Steel 316 L suitable for domestic hot water
- *ENERGY BUFFER hot-cold:* mild steel.

HEAT EXCHANGER
Nr. 2 fixed oversize stainless steel heat exchangers with double spiral coil.

INSULATION
HARD: High thermal insulation with ecological polyurethane hard foam.
HARD FOAM (CLASS "A" MODELS): hard polyurethane foam for high thermal insulation with a vacuum sheet of highly insulating material.
Grey PVC external lining.

CATHODE PROTECTION (DHW STORAGE)
Magnesium anode.

GASKET- FLANGE PLATE
Silicone gaskets suitable for water intended for human consumption (tested according to 98/83/CE); Flange for inspection and counterflange (standard) with provision for electric immersion heater.

WARRANTY
5 years (See general sales conditions and warranty)

ACCESSORIES AND SPARE PARTS
See Accessories section for the entire list.

	Model	Art. Nr.	Power of combinable heat pump [kWt]	Heat exchangers surface [m²] Upper	Lower	ErP ENERGY EFFICIENCY CLASS
BOLLY® 2 HY XL INOX HARD FOAM INSULATION	**300**	3134052010100	9-14	2,7	0,8	**B**
	500	3134052010101	14-20	4,0	1,4	**C**
BOLLY® 2 HY XL INOX - class A HARD FOAM INSULATION	**300**	3134052010105	9-14	2,7	0,8	**A**
	500	3134052010106	14-20	4,0	1,4	**A**

ACCESSORIES

ELECTRIC IMMERSION HEATERS

Mod.	Heated volume by electric immersion heater [lt]	MONOPHASE 1,5 kW	2 kW	3 kW	THREEPHASE 4 kW	5 kW	6 kW	9 kW	12 kW
		5240000000051	5240000000052	5240000000053	5240000000047	5240000000048	5240000000049	5240000000050	5240000000031
		Ignition time from 10 °C to 45 °C with electric immersion heaters [min]			Ignition time from 10 °C to 45 °C with electric immersion heaters [min]				
300	237	425	319	213	159	//	//	//	//
500	417	746	560	373	280	224	//	//	//

FULL CONTROL electronic unit (mounted on tank)

Art. Nr.	for models
5220280000005	XB



Thermometer

Art. Nr.
5032240000107
5 units box



Products designed and manufactured for using within temperature and pressure limits in accordance to Art. 4.3 Directive 2014/68/EU (P.E.D.)

BOLLY® **2 HY XL INOX**

STAINLESS STEEL 316L CALORIFIER FOR DHW PRODUCTION
WITH 2 FIXED EXCHANGERS AND INTEGRATED BUFFER SPECIFIC FOR HEAT PUMPS

STORAGE		HEAT EXCHANGER		BUFFER TANK	
Pmax	Tmax	Pmax	Tmax	Pmax	Tmax
6 bar	95 °C	12 bar	110 °C	4 bar	-10/+95 °C

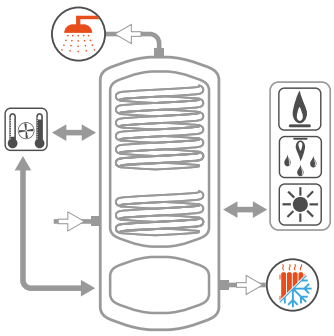

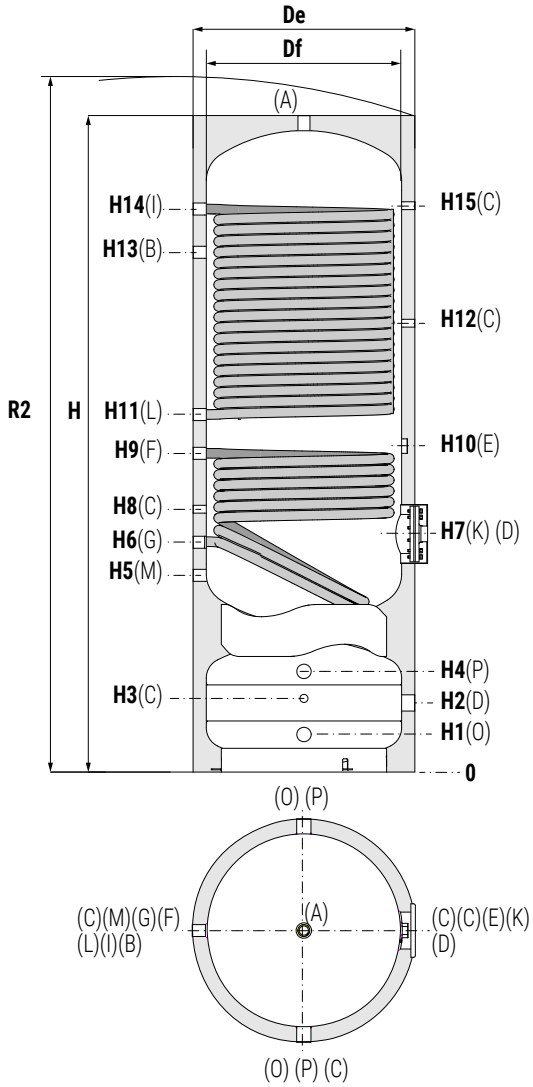

A	Domestic hot water outlet
B	Recirculation / Domestic hot water outlet
C	Connection for instrumentation
D	Connection for electric immersion heater
E	Connection for magnesium anode G 1"1/4 F
F	Lower heat exchanger inlet
G	Lower heat exchanger outlet
K	Flange for inspection and counterflange (standard) with provision for electric immersion heater G 1"1/2 F
M	Domestic cold water circuit inlet
O	Heating return/to generator
P	Heating delivery/from generator
L	Upper heat exchanger outlet
I	Upper heat exchanger inlet

Model	DHW storage volume	Buffer tank volume	Weight	Df	De	H	R2	H1	H2	H3	H4	H5	H6	H7	H8	H9	H10	H11	H12	H13	H14	H15
	[lt]		[kg]	[mm]																		
300	293	85	101	550	650	1895	2000	110	232	264	354	640	746	780	860	960	990	1070	1296	1510	1620	1630
500	503	115	152	650	750	2185	2310	125	230	245	335	655	765	795	875	1061	1085	1190	1494	1730	1874	1885

Model	A	B	C	D	E	F	G	M	O	P	L	I	K
	Connections F												[mm]
300	1"	1"	1"1/2	1"1/2	1"1/4	1"	1"	1"	1"1/4	1"1/4	1"	1"	Øi120/Øe180
500	1"	1"	1"1/2	1"1/2	1"1/4	1"	1"	1"	1"1/4	1"1/4	1"	1"	Øi120/Øe180

Net volume data according to EN 15332 available on product label.

Products designed and manufactured for using within temperature and pressure limits in accordance to Art. 4.3 Directive 2014/68/EU (P.E.D.)

BOLLY® **2 HY XL INOX**

HEAT EXCHANGERS TECHNICAL DATA



Data have been calculated on following basis:
1) Primary circuit at T1 and proper energy source;
2) Production of DHW in continuous from 10 °C to t2;
3) DHW that can be taken in the first 10' and in the first hour from storage at t2, input 10 °C and output 45 °C;
4) Non-scaling sanitary water

UPPER
HEAT EXCHANGER

Model	Primary flow rate	Ignition time (minutes) from 10 °C to t2 and primary at T1				Maximum power exchange (kW) with primary at T1, secondary within 10-45 °C and constant use of DHW production				DHW continuous production lt/h within 10-45 °C and primary at T1HW production			
	[m^3/h]	T1/t2				T1				T1			
		55/50	65/60	70/60	80/60	55	65	70	80	55	65	70	80
300	4	30	31	22	14	20,4	25,8	32,8	45,7	438	444	567	792
	2	35	36	26	17	18,8	23,9	29,9	40,9	403	410	517	709
500	5	35	36	26	17	32,7	41,2	52,3	72,5	704	714	908	1261
	2,5	41	43	31	20	30,2	38,3	47,8	64,9	651	663	830	1128

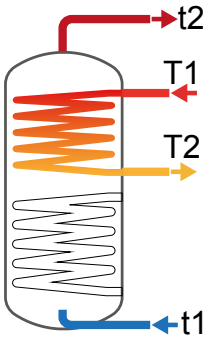

Model	Primary flow rate	DHW produced in the first 10 minutes in lt/10' input 10 °C output 45 °C, storage at t2 and primary at T1				DHW produced in the first hour in lt/60' input 10 °C output 45 °C, storage at t2 and primary at T1				Heat exchanger pressure drop	
	[m^3/h]	T1/t2				T1/t2				[mmH_2O]	[mbar]
		55/50	65/60	70/60	80/60	55/50	65/60	70/60	80/60		
300	4	302	303	323	361	579	584	682	862	2517	247
	2	296	297	315	347	551	557	642	796	742	73
500	5	539	540	573	632	985	993	1148	1430	5813	570
	2,5	530	532	560	609	942	952	1085	1324	1719	169

LOWER
HEAT EXCHANGER

Model	Primary flow rate	Ignition time (minutes) from 10 °C to t2 and primary at T1				Maximum power exchange (kW) with primary at T1, secondary within 10-45 °C and constant use of DHW production				DHW continuous production lt/h within 10-45 °C and primary at T1HW production			
	[m^3/h]	T1/t2				T1				T1			
		55/50	65/60	70/60	80/60	55	65	70	80	55	65	70	80
300	4	147	153	104	67	7,6	9,5	12,2	17,3	158	160	208	296
	2	163	171	116	75	7,1	8,9	11,4	15,9	147	150	192	272
500	5	138	143	100	65	13,5	17,1	21,9	30,8	288	292	376	532
	2,5	154	160	111	73	12,7	16,1	20,4	28,4	270	274	350	490

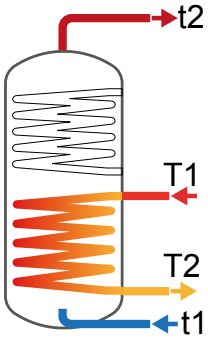

Model	Primary flow rate	DHW produced in the first 10 minutes in lt/10' input 10 °C output 45 °C, storage at t2 and primary at T1				DHW produced in the first hour in lt/60' input 10 °C output 45 °C, storage at t2 and primary at T1				Heat exchanger pressure drop	
	[m^3/h]	T1/t2				T1/t2				[mmH_2O]	[mbar]
		55/50	65/60	70/60	80/60	55/50	65/60	70/60	80/60		
300	4	445	445	453	468	545	547	585	655	999	98
	2	443	444	451	464	536	539	572	636	291	28
500	5	767	767	781	807	949	952	1019	1144	2481	243
	2,5	764	764	777	800	935	938	999	1111	728	71

BOLLY® **2 HY XL INOX**

HEAT EXCHANGERS TECHNICAL DATA (UPPER)



Heat Exchanger output referred to temperature and flow rate of primary circuit and with secondary at 10/45°C at maximum withdrawal of producible DHW (Upper limit of the curves referred to maximum primary flow rate in the heat exchanger, while the lower limit in the curves refer to the minimum primary flow rate)

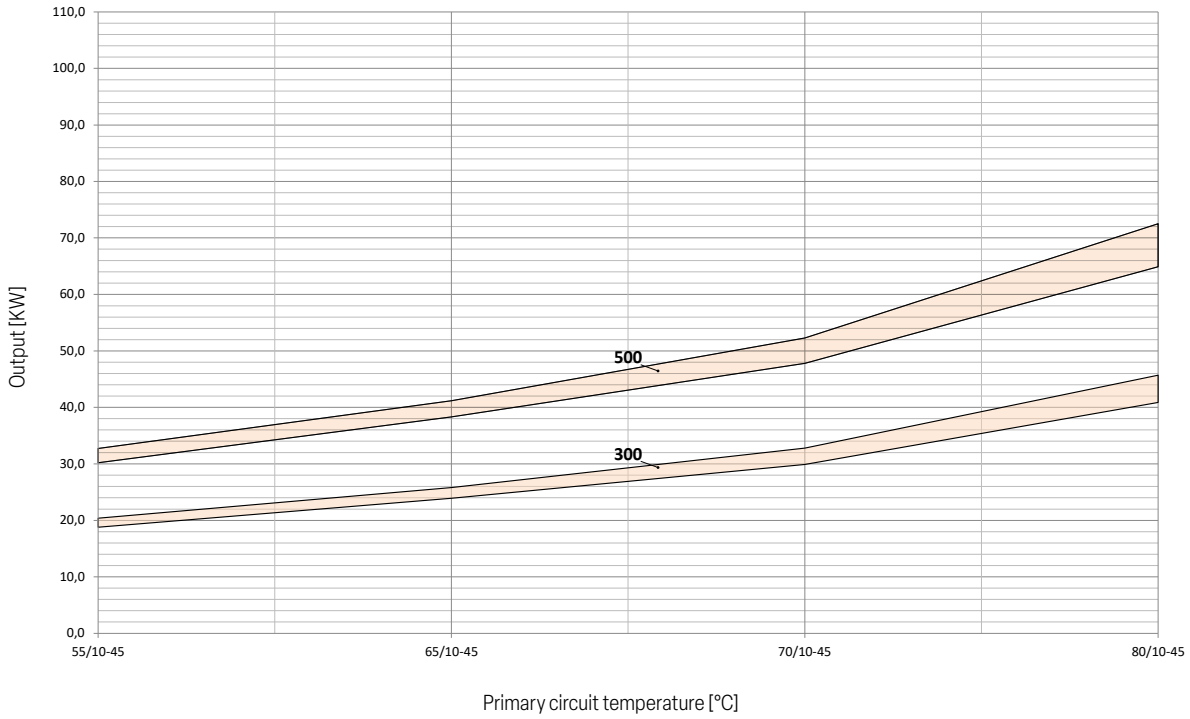

Model Bolly® 2 HY XL INOX	300		500	
Flow rate [m³/h]	MAX	MIN	MAX	MIN
	3	1,5	3,5	1,75

HEAT EXCHANGERS TECHNICAL DATA (LOWER)

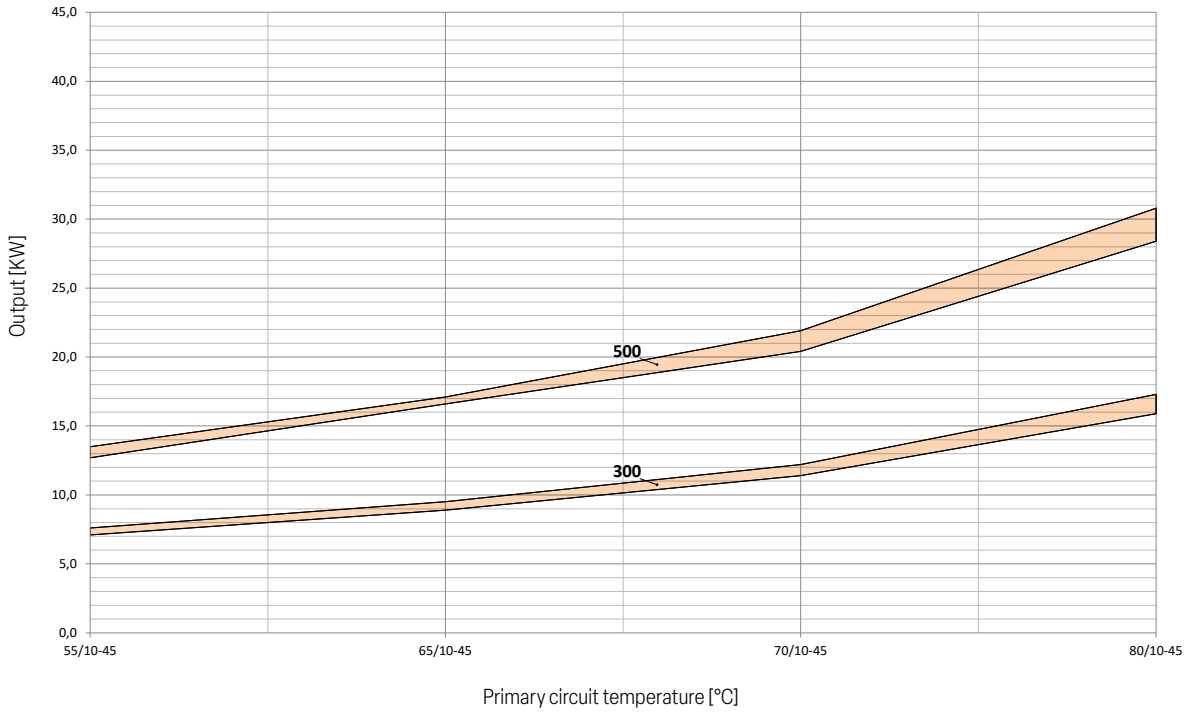

Model Bolly® 2 HY XL INOX	300		500	
Flow rate [m³/h]	MAX	MIN	MAX	MIN
	3	1,5	3,5	1,75

BOLLY® **2 HY XL INOX**

HEAT EXCHANGERS TECHNICAL DATA (UPPER)



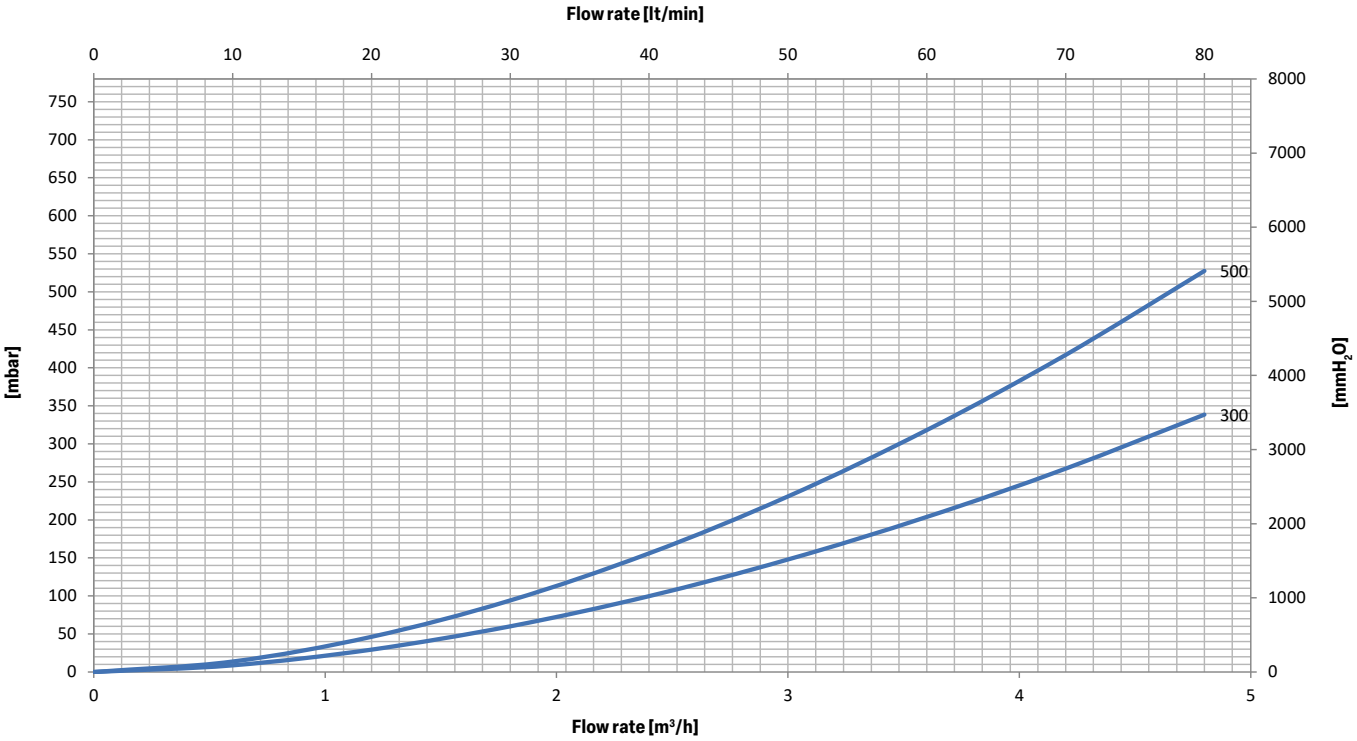

HEAT EXCHANGERS TECHNICAL DATA (LOWER)

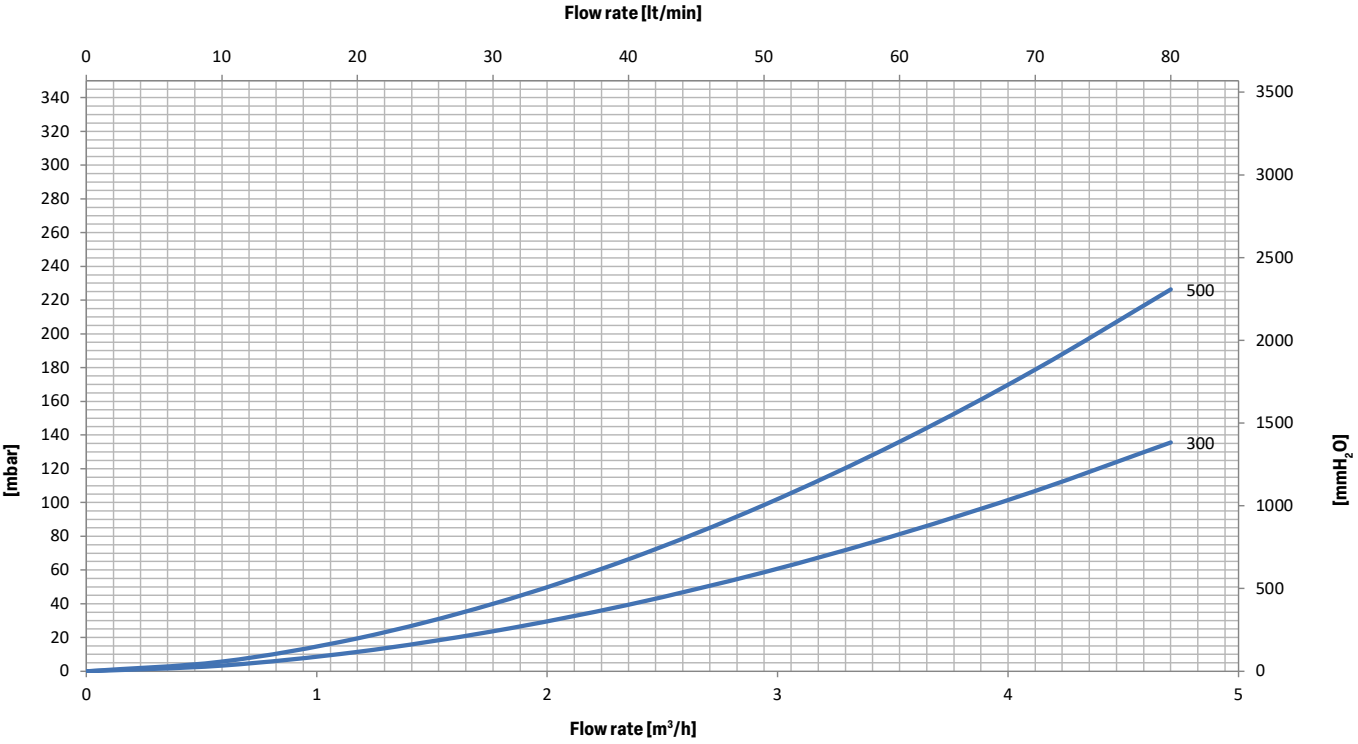



EXAMPLE OF INSTALLATION WITH **BOLLY® 2 HY XL INOX**

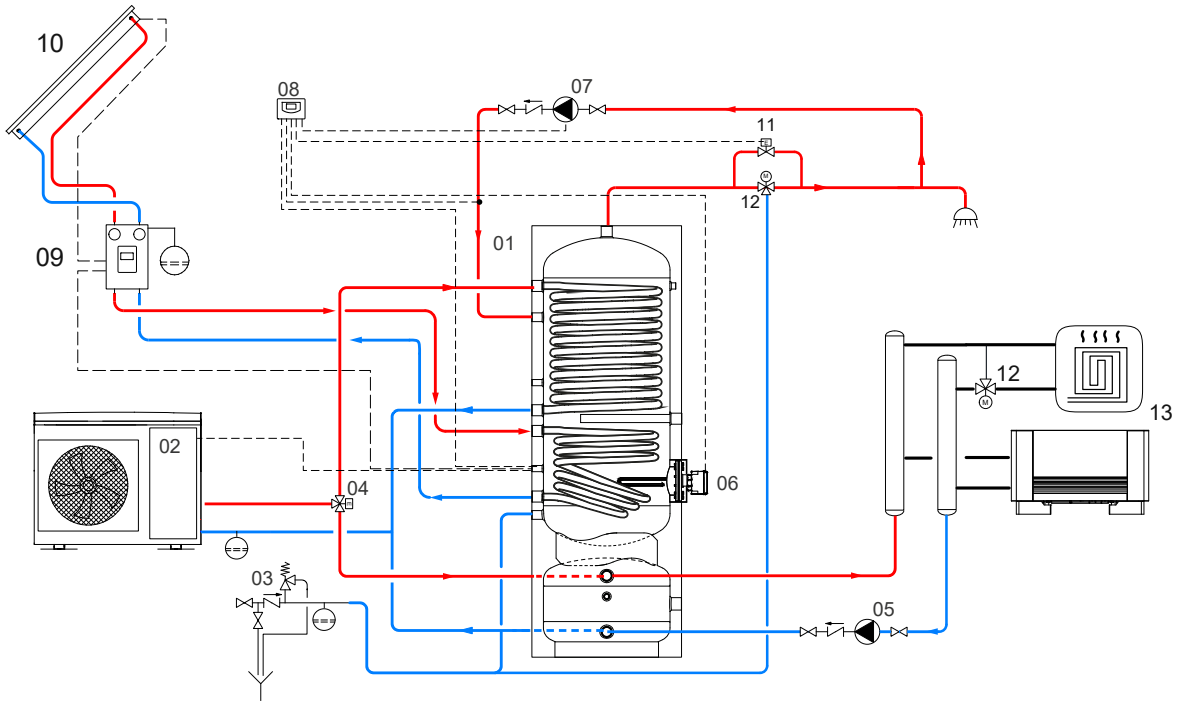

1	BOLLY® 2 HY XL	5	Circulation group for heating/cooling system	9	Solar system circulation group	13	Heating units
2	Generator (Heat pump)	6	Electric immersion heater	10	Solar panels		
3	Hydraulic safety group	7	D.H.W. recirculation group	11	By-pass solenoid valve		
4	Motorized 3-way valve	8	FULL CONTROL electronic unit/ thermostat	12	Thermostatic mixing valve		

The following schemes are purely illustrative. To realize the installation, always refer to a qualified technician.

PLATE HEAT EXCHANGERS AND D.H.W. ISTANTANEOUS SYSTEMS

D.H.W. production

Heating





Model	PLATE HEAT EXCHANGERS PHC	BRAZED PLATE HEAT EXCHANGERS SLB
Page nr.	264	280
Application		
Heat exchangers	-Inspectable plate heat exchangers	-Brazed plate heat exchangers
Electronic control	-	-
Energy source		
Rrange of power output	**up to 300 kW**	**up to 120 kW**
Insulation	Optional (on request)	Optional (on request)
Installation	Free-standing	Free-standing
Suggested Application	From domestic systems to large-scale systems	From domestic systems to medium-scale systems







PIASTRATERM® MODULE	MACS® MODULE	PRS MODULE
288	294	298
-Brazed plate heat exchangers	-Brazed plate heat exchangers	-Inspectable plate heat exchangers
-	-Standard on-board installation	-Standard on-board installation
up to 300 kW	**70 / 120 / 180 kW**	**up to 300 kW**
supplied as standard	supplied as standard	-
wall-mounted / mounted on the calorifier	wall-mounted	-Floor standing
From domestic systems to large-scale systems	From domestic systems to medium-scale systems	Large-scale systems

PLATE HEAT EXCHANGERS





PRODUCT RANGE									
MODELS	PHC 2030	PHC 2045	PHC 2075	PHC 3080	PHC 30120	PHC 4060	PHC 4090	PHC 40125	PHC 45120
NR. OF PLATES	9-67	9-67	9-67	13-205	13-205	13-205	13-205	13-205	13-213
CONNECTIONS	threaded sleeve (1'' 1/4)	threaded sleeve (1'' 1/4)	threaded sleeve (1'' 1/4)	threaded sleeve (2'')	threaded sleeve (2'')	threaded sleeve (2'' 1/2)	threaded sleeve (2'' 1/2)	threaded sleeve (2'' 1/2)	Flanged connection (ISO DN-100)

PHC INSPECTABLE PLATE HEAT EXCHANGERS

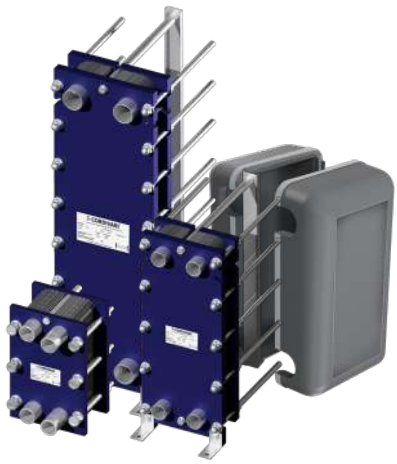

PHC heat exchangers are used in all istallations, domestic, residential and commercial, where you need a thermic heat exchange between fluids.
They are suitable for domestic hot water production either instantaneously or with storage, heating of swimming pools using different energy sources (traditional or biomass boiler, solar thermal system, heat pump, etc.).
PHC plate heat exchangers can also be used in district heating systems, in heat recovery systems, for hydraulic separation of installations.
The new range of Cordivari PHC plate heat exchangers consists of 9 models, combined with the variability of plates number, type of gaskets and maximum operating pressure, which allows to cover a very wide range of applications, offer every potentiality and satisfaying all typical thermohydraulic application conditions.
Thanks to the possibility of opening the exchanger for cleaning or changing the configuration, the PHC heat exchangers are particularly suitable in installations with high-performances, wherever there is a need for a flexible, high-performance exchanger that allows maintenance operations.
PHC heat exchangers are designed for the field of appliction and within the operating limits according to Art. 4.3 of the PED directive 2014/68/EU

WORKING CONDITIONS			
GASKETS MODEL	MAX PRESSURE	TEMPERATURE [MIN./MAX]	(*) Values intended as temperature limits for the seals. In any case, the minimum temperature must always be higher than the freezing temperature of both fluids and the temperature and pressure in the heat exchanger must always be lower than he operating limits indicated in Art. 4.3 of the PED directive 2014/68/EU (i.e. the maximum operating temperature must not exceed the lower temperature between the two circulating fluids, corresponding to the steam pressure of 0,5 bar above atmospheric pressure).
EPDM	10/16 bar	-10/+140 °C (*)	
NBR	10/16 bar	-4/+110 °C (*)	

Cordivari plate heat exchangers, are offering now a complete range of solutions for domestic, residential and commercial applications. A wide and flexible proposal, both for brazed exchangers of small dimensions, or plate-to-plate exchangers for larger application. New range of exchangers, thanks to various dimensions and types, connections from DN32 to DN100, different and with extended working pressure limits, allows to meet any plant requirements or plumbing needs.

From small single-family house sourced by boiler or pellet stove, to big plants, every installation finds today the most suitable Cordivari solution thanks to the new on-line professional dimensioning tool, where you can always find the best performing and the most economical solution.






PRODUCT RANGE																				
MODELS	SLB 15				SLB 20							SLB 30					SLB 40			
NR. OF PLATES	10	20	30	40	12	16	20	24	30	34	40	14	20	30	40	50	30	40	50	60
CONNECTIONS	3/4" M				3/4" M							1" M					1" M			
MAXIMUM FLOW RATE [m^3/h]	2,4				2,4							3,8					3,8			
WEIGHT [Kg]	0,62	1,02	1,42	1,82	1,10	1,13	1,16	1,19	1,24	1,27	1,32	2,98	3,70	4,90	6,10	7,30	8,3	10,2	12,1	14

SLB BRAZED PLATE HEAT EXCHANGERS



Cordivari SLB brazed plate heat exchangers represents the most compact and economic solution for all applications where heat exchange is required in domestic, residential and commercial environments. The construction technology is based on brazed welding coupling with 99,99% pure copper, of several plates in stainless steel 316L. The new range of SLB heat exchangers consists of 4 models avaible in bare or insulated version and is designed to efficiently meet the widest range of heat exchange needs. SLB plate heat exchangers are designed for the field of application and within the operating limits according to Art. 4.3 of the PED directive 2014/68/EU and are designed for the production of domestic or heating hot water, air-conditioning, separation of thermal systems, refrigeration, evaporation and industrial processes.

ADVANTAGES
- High efficiency
- Long service life
- Cost and space-saving
- High reliability
- Countless variations in the ratio of storage volume to exchanger capacity

WORKING CONDITIONS		
MAX. PRESSURE	MAX. TEMPERATURE	(*) Values intended as temperature limits for the seals. In any case, the minimum temperature must always be higher than the freezing temperature of both fluids and the temperature and pressure in the heat exchanger must always be lower than he operating limits indicated in Art. 4.3 of the PED directive 2014/68/EU (i.e. the maximum operating temperature must not exceed the lower temperature between the two circulating fluids, corresponding to the steam pressure of 0,5 bar above atmospheric pressure).
10 bar	190 °C (*)	

HEAT EXCHANGERS **PHC**
INSPECTIONABLE PLATE TO PLATE HEAT EXCHANGERS

CHEMICAL COMPATIBILITY

These charts indicate the chemical compatibility of seal materials with fluids of different natures. Cordivari guarantees suitability of use of its plate heat exchangers, under the operating conditions shown in the catalogue, exclusively with water or glycol water.

Not permitted fluids for plates
HYDROCHLORIC ACID
SULPHURIC ACID
NITRIC ACID
KETONES
ETHER
HALOGENATED HYDROCARBONS
AROMATIC HYDROCARBONS
SODA

Fluid	Nitrile Gaskets (NBR)	EPDMprx gaskets
DOMESTIC HOT WATER (<110°C)	☑	☑
DE-MINERALIZED WATER	☑	
SWIMMING POOL WATER	☑	
MINERAL WATER		☑
ETILENIC GLYCOLE < 30%	☑	☑
ETILENIC GLYCOLE > 30%		☑
PROPYLENIC GLYCOL < 30%	☑	☑
PROPYLENIC GLYCOL > 30%		☑
EDIBLE OILS	☑	
DIAMETRIC OIL	☑	
MINERAL OIL	☑	
SYNTHETIC OIL		☑

Fluid	Nitrile Gaskets (NBR)	EPDMprx gaskets
QUENCHING OIL (MINERAL)	☑	
WINE VINEGAR		☑
BEER	☑	☑
MILK	☑	☑
LIQUORS		☑
WINE	☑	☑
ACETONE		☑
ETHYL ALCOHOLS		☑
ETHANOL 60%		☑
ETHYLENE	☑	
METHANOL		☑

PLATE TYPE

H: plates with high thermal exchange efficiency (higher pressure loss than **L** type)
L: plates with low pressure loss (lower thermal exchange efficiency than **H** type)
M: mixed **H**–**L** configuration

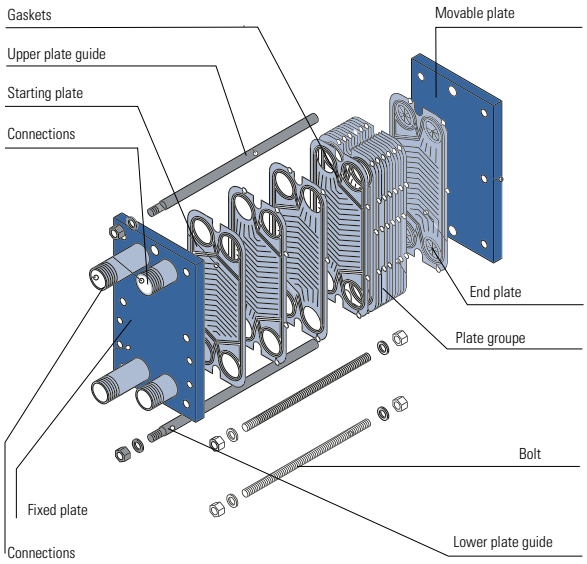

ADVANTAGES
Cordivari's inspectable plate heat exchangers, seen in detail with exploded view of components.

- Quick access for inspection and maintenance
- Modular design
- Plates with an excellent overall heat transfer coefficient
- Corrosion-resistant
- Rigorous quality tests performed in-house
- Plate conformation designed for maximum exchange performance

MATERIALS AND FINISHES

- Frames (not in contact with fluids) in painted carbon steel
- Plate guides, tie rods and nuts (not in contact with fluids) in galvanised carbon steel
- Threaded fittings and heat exchange plates (in contact with fluids in AISI 316L stainless steel)
- Removable EPDM or NBR gaskets

CONNECTIONS

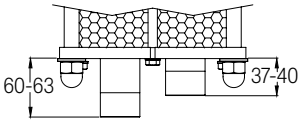

M-threaded connections 1"1/4
Applied on models:
• PHC 2030 • PHC 2045
• PHC 2075

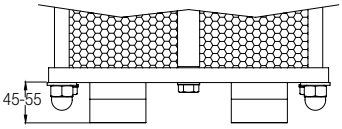

M-threaded connections 2" 1/2
Applied on models:
• PHC 4060 **• PHC 4090**
• PHC 40120

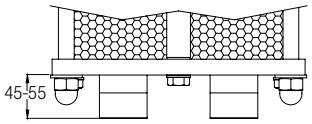

M-threaded connections 2"
Applied on models:
• PHC 3080 **• PHC 30120**

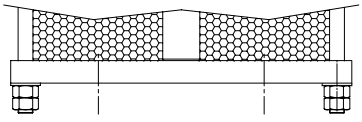

FLANGED CONNECTIONS ISO DN-100
Applied on models:
• PHC 45120

HEAT EXCHANGERS **PHC 2030**

INSPECTIONABLE PLATE TO PLATE HEAT EXCHANGERS



PROMPT AVAILABILITY

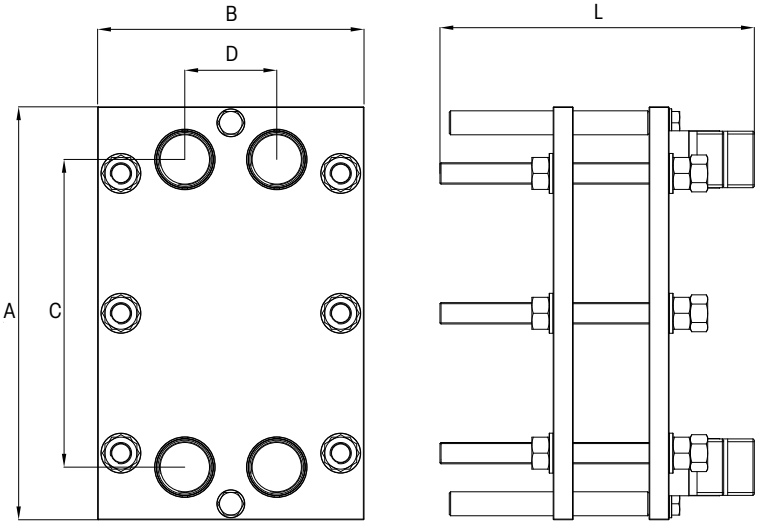

Support feet available on request;
See Accessories section.

CONNECTIONS
DN32 (1" 1/4) M-threaded

DIMENSIONS	
A [mm]	310
B [mm]	200
C [mm]	231
D [mm]	69

WORKING CONDITIONS		
GASKETS MODEL	MAX PRESSURE	TEMPERATURE [MIN./MAX]
NBR	10/16 bar	-10/+110°C(*)
EPDM	10/16 bar	-10/+140°C(*)

(*) Values intended as temperature limits for the seals. In any case, the minimum temperature must always be higher than the freezing temperature of both fluids and the temperature and pressure in the heat exchanger must always be lower than he operating limits indicated in Art. 4.3 of the PED directive 2014/68/EU (i.e. the maximum operating temperature must not exceed the lower temperature between the two circulating fluids, corresponding to the steam pressure of 0,5 bar above atmospheric pressure).

Nr. Plates	**With EPDM gaskets PN10 VERSION**	**PN16 VERSION** with surcharge	**With NBR gaskets PN10 VERSION**	**PN16 VERSION** with surcharge	L	Prim.=Sec.	Art. Nr. Insulation
	Art. Nr.(*)		Art. Nr.(*)		[mm]	Volume [lt]	
9	3175056656001	3175056656031	3175056656061	3175056656091	220	0,2	5655000610028
11	3175056656002	3175056656032	3175056656062	3175056656092		0,3	
13	3175056656003	3175056656033	3175056656063	3175056656093		0,3	
15	3175056656004	3175056656034	3175056656064	3175056656094		0,4	
17	3175056656005	3175056656035	3175056656065	3175056656095		0,4	
19	3175056656006	3175056656036	3175056656066	3175056656096		0,5	
21	3175056656007	3175056656037	3175056656067	3175056656097		0,5	
23	3175056656008	3175056656038	3175056656068	3175056656098		0,6	
25	3175056656009	3175056656039	3175056656069	3175056656099		0,6	
27	3175056656010	3175056656040	3175056656070	3175056656100		0,7	
29	3175056656011	3175056656041	3175056656071	3175056656101		0,7	
31	3175056656012	3175056656042	3175056656072	3175056656102		0,8	
33	3175056656013	3175056656043	3175056656073	3175056656103	370	0,8	5655000610029
35	3175056656014	3175056656044	3175056656074	3175056656104		0,9	
37	3175056656015	3175056656045	3175056656075	3175056656105		0,9	
39	3175056656016	3175056656046	3175056656076	3175056656106		1,0	
41	3175056656017	3175056656047	3175056656077	3175056656107		1,0	
43	3175056656018	3175056656048	3175056656078	3175056656108		1,1	
45	3175056656019	3175056656049	3175056656079	3175056656109		1,1	
47	3175056656020	3175056656050	3175056656080	3175056656110		1,2	
49	3175056656021	3175056656051	3175056656081	3175056656111		1,2	
51	3175056656022	3175056656052	3175056656082	3175056656112		1,3	
53	3175056656023	3175056656053	3175056656083	3175056656113		1,3	
55	3175056656024	3175056656054	3175056656084	3175056656114		1,4	
57	3175056656025	3175056656055	3175056656085	3175056656115		1,4	
59	3175056656026	3175056656056	3175056656086	3175056656116		1,5	
61	3175056656027	3175056656057	3175056656087	3175056656117		1,5	
63	3175056656028	3175056656058	3175056656088	3175056656118		1,6	
65	3175056656029	3175056656059	3175056656089	3175056656119		1,6	
67	3175056656030	3175056656060	3175056656090	3175056656120		1,7	

For the operating conditions, please consult our online tool at www.cordivari.it.
(*) The codes shown refer to the heat exchanger configuration with H-geometry plates. For M and L plate geometries, please contact your local agency to obtain the corresponding sales code.

HEAT EXCHANGERS **PHC 2045**

INSPECTIONABLE PLATE TO PLATE HEAT EXCHANGERS

SUPPORT FEET INCLUDED



PROMPT AVAILABILITY

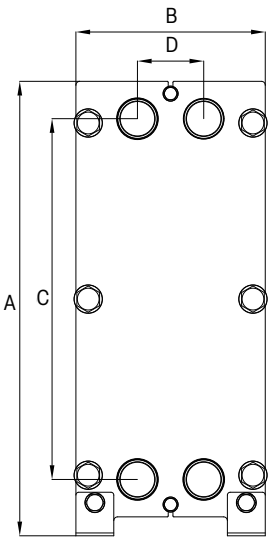

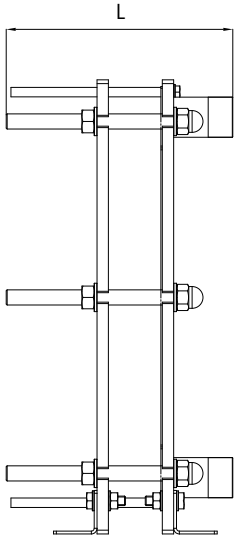

CONNECTIONS
DN32 (1" 1/4) M-threaded

DIMENSIONS	
A [mm]	480
B [mm]	200
C [mm]	381
D [mm]	70

WORKING CONDITIONS		
GASKETS MODEL	MAX PRESSURE	TEMPERATURE [MIN./MAX]
NBR	10/16 bar	-10/+110°C(*)
EPDM	10/16 bar	-10/+140°C(*)

(*) Values intended as temperature limits for the seals. In any case, the minimum temperature must always be higher than the freezing temperature of both fluids and the temperature and pressure in the heat exchanger must always be lower than he operating limits indicated in Art. 4.3 of the PED directive 2014/68/EU (i.e. the maximum operating temperature must not exceed the lower temperature between the two circulating fluids, corresponding to the steam pressure of 0,5 bar above atmospheric pressure).

Nr. Plates	**With EPDM gaskets PN10 VERSION** Art. Nr.(*)	**PN16 VERSION** with surcharge	**With NBR gaskets PN10 VERSION** Art. Nr.(*)	**PN16 VERSION** with surcharge	L [mm]	Prim.=Sec. Volume [lt]	Art. Nr. Insulation
9	3175056656121	3175056656151	3175056656181	3175056656211	225	0,4	5655000610030
11	3175056656122	3175056656152	3175056656182	3175056656212		0,4	
13	3175056656123	3175056656153	3175056656183	3175056656213		0,5	
15	3175056656124	3175056656154	3175056656184	3175056656214		0,6	
17	3175056656125	3175056656155	3175056656185	3175056656215		0,7	
19	3175056656126	3175056656156	3175056656186	3175056656216		0,8	
21	3175056656127	3175056656157	3175056656187	3175056656217		0,8	
23	3175056656128	3175056656158	3175056656188	3175056656218		0,9	
25	3175056656129	3175056656159	3175056656189	3175056656219		1,0	
27	3175056656130	3175056656160	3175056656190	3175056656220		1,1	
29	3175056656131	3175056656161	3175056656191	3175056656221		1,2	
31	3175056656132	3175056656162	3175056656192	3175056656222		1,2	
33	3175056656133	3175056656163	3175056656193	3175056656223	375	1,3	5655000610031
35	3175056656134	3175056656164	3175056656194	3175056656224		1,4	
37	3175056656135	3175056656165	3175056656195	3175056656225		1,5	
39	3175056656136	3175056656166	3175056656196	3175056656226		1,6	
41	3175056656137	3175056656167	3175056656197	3175056656227		1,6	
43	3175056656138	3175056656168	3175056656198	3175056656228		1,7	
45	3175056656139	3175056656169	3175056656199	3175056656229		1,8	
47	3175056656140	3175056656170	3175056656200	3175056656230		1,9	
49	3175056656141	3175056656171	3175056656201	3175056656231		2,0	
51	3175056656142	3175056656172	3175056656202	3175056656232		2,0	
53	3175056656143	3175056656173	3175056656203	3175056656233		2,1	
55	3175056656144	3175056656174	3175056656204	3175056656234		2,2	
57	3175056656145	3175056656175	3175056656205	3175056656235		2,3	
59	3175056656146	3175056656176	3175056656206	3175056656236		2,4	
61	3175056656147	3175056656177	3175056656207	3175056656237		2,4	
63	3175056656148	3175056656178	3175056656208	3175056656238		2,5	
65	3175056656149	3175056656179	3175056656209	3175056656239		2,6	
67	3175056656150	3175056656180	3175056656210	3175056656240		2,7	

For the operating conditions, please consult our online tool at www.cordivari.it.
(*) The codes shown refer to the heat exchanger configuration with H-geometry plates. For M and L plate geometries, please contact your local agency to obtain the corresponding sales code.

HEAT EXCHANGERS **PHC 2075**

INSPECTIONABLE PLATE TO PLATE HEAT EXCHANGERS

SUPPORT FEET INCLUDED



PROMPT AVAILABILITY

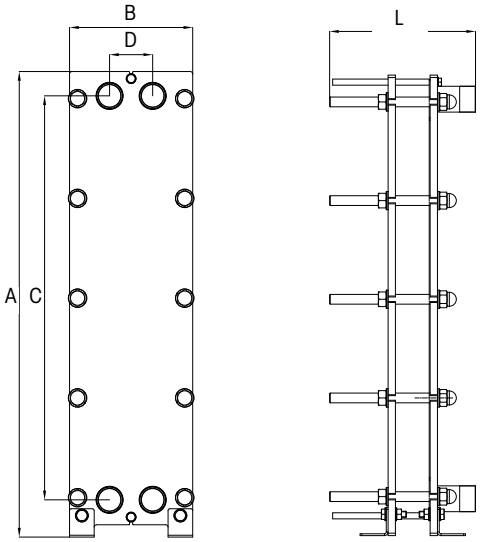

CONNECTIONS
DN32 (1" 1/4) M-threaded

DIMENSIONS	
A [mm]	756
B [mm]	200
C [mm]	656
D [mm]	70

WORKING CONDITIONS		
GASKETS MODEL	MAX PRESSURE	TEMPERATURE [MIN./MAX]
NBR	10/16 bar	-10/+110°C(*)
EPDM	10/16 bar	-10/+140°C(*)

(*) Values intended as temperature limits for the seals. In any case, the minimum temperature must always be higher than the freezing temperature of both fluids and the temperature and pressure in the heat exchanger must always be lower than he operating limits indicated in Art. 4.3 of the PED directive 2014/68/EU (i.e. the maximum operating temperature must not exceed the lower temperature between the two circulating fluids, corresponding to the steam pressure of 0,5 bar above atmospheric pressure).

Nr. Plates	**With EPDM gaskets PN10 VERSION** Art. Nr.(*)	**PN16 VERSION** with surcharge	**With NBR gaskets PN10 VERSION** Art. Nr.(*)	**PN16 VERSION** with surcharge	L [mm]	Prim.=Sec. Volume [lt]	Art. Nr. Insulation
9	3175056656241	3175056656271	3175056656301	3175056656331	225	0,8	5655000610032
11	3175056656242	3175056656272	3175056656302	3175056656332		0,9	
13	3175056656243	3175056656273	3175056656303	3175056656333		1,1	
15	3175056656244	3175056656274	3175056656304	3175056656334		1,3	
17	3175056656245	3175056656275	3175056656305	3175056656335		1,4	
19	3175056656246	3175056656276	3175056656306	3175056656336		1,6	
21	3175056656247	3175056656277	3175056656307	3175056656337		1,8	
23	3175056656248	3175056656278	3175056656308	3175056656338		2,0	
25	3175056656249	3175056656279	3175056656309	3175056656339		2,1	
27	3175056656250	3175056656280	3175056656310	3175056656340		2,3	
29	3175056656251	3175056656281	3175056656311	3175056656341		2,5	
31	3175056656252	3175056656282	3175056656312	3175056656342		2,6	
33	3175056656253	3175056656283	3175056656313	3175056656343	375	2,8	5655000610033
35	3175056656254	3175056656284	3175056656314	3175056656344		3,0	
37	3175056656255	3175056656285	3175056656315	3175056656345		3,1	
39	3175056656256	3175056656286	3175056656316	3175056656346		3,3	
41	3175056656257	3175056656287	3175056656317	3175056656347		3,5	
43	3175056656258	3175056656288	3175056656318	3175056656348		3,7	
45	3175056656259	3175056656289	3175056656319	3175056656349		3,8	
47	3175056656260	3175056656290	3175056656320	3175056656350		4,0	
49	3175056656261	3175056656291	3175056656321	3175056656351		4,2	
51	3175056656262	3175056656292	3175056656322	3175056656352		4,3	
53	3175056656263	3175056656293	3175056656323	3175056656353		4,5	
55	3175056656264	3175056656294	3175056656324	3175056656354		4,7	
57	3175056656265	3175056656295	3175056656325	3175056656355		4,8	
59	3175056656266	3175056656296	3175056656326	3175056656356		5,0	
61	3175056656267	3175056656297	3175056656327	3175056656357		5,2	
63	3175056656268	3175056656298	3175056656328	3175056656358		5,4	
65	3175056656269	3175056656299	3175056656329	3175056656359		5,5	
67	3175056656270	3175056656300	3175056656330	3175056656360		5,7	

For the operating conditions, please consult our online tool at www.cordivari.it.
(*) The codes shown refer to the heat exchanger configuration with H-geometry plates. For M and L plate geometries, please contact your local agency to obtain the corresponding sales code.

HEAT EXCHANGERS **PHC 3080**

INSPECTIONABLE PLATE TO PLATE HEAT EXCHANGERS

SUPPORT FEET INCLUDED



PROMPT AVAILABILITY

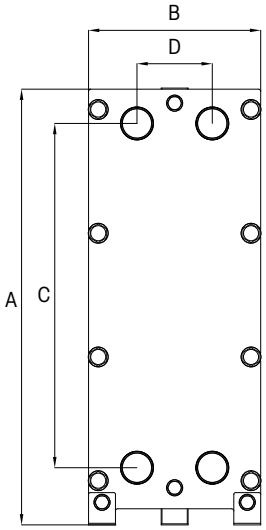

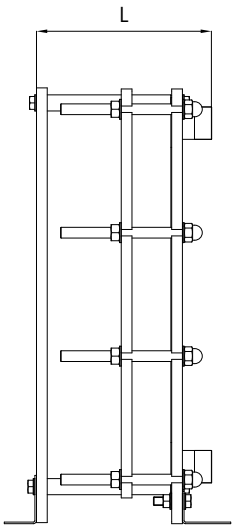

CONNECTIONS
DN50 (2") M-THREADED

DIMENSIONS	
A [mm]	810
B [mm]	320
C [mm]	640
D [mm]	140

WORKING CONDITIONS		
GASKETS MODEL	MAX PRESSURE	TEMPERATURE [MIN./MAX]
NBR	10/16 bar	-10/+110°C(*)
EPDM	10/16 bar	-10/+140°C(*)

(*) Values intended as temperature limits for the seals. In any case, the minimum temperature must always be higher than the freezing temperature of both fluids and the temperature and pressure in the heat exchanger must always be lower than he operating limits indicated in Art. 4.3 of the PED directive 2014/68/EU (i.e. the maximum operating temperature must not exceed the lower temperature between the two circulating fluids, corresponding to the steam pressure of 0,5 bar above atmospheric pressure).

Nr. Plates	**With EPDM gaskets** PN10 VERSION	PN16 VERSION with surcharge	**With NBR gaskets** PN10 VERSION	PN16 VERSION with surcharge	L	Prim.=Sec.	Art. Nr. Insulation
	Art. Nr.(*)		Art. Nr.(*)		[mm]	Volume [lt]	
13	3175056656361	3175056656458	3175056656555	3175056656652	545	1,8	5655000610034
15	3175056656362	3175056656459	3175056656556	3175056656653		2,1	
17	3175056656363	3175056656460	3175056656557	3175056656654		2,4	
19	3175056656364	3175056656461	3175056656558	3175056656655		2,7	
21	3175056656365	3175056656462	3175056656559	3175056656656		2,9	
23	3175056656366	3175056656463	3175056656560	3175056656657		3,2	
25	3175056656367	3175056656464	3175056656561	3175056656658		3,5	
27	3175056656368	3175056656465	3175056656562	3175056656659		3,8	
29	3175056656369	3175056656466	3175056656563	3175056656660		4,1	
31	3175056656370	3175056656467	3175056656564	3175056656661		4,3	
33	3175056656371	3175056656468	3175056656565	3175056656662		4,6	
35	3175056656372	3175056656469	3175056656566	3175056656663		4,9	
37	3175056656373	3175056656470	3175056656567	3175056656664		5,2	
39	3175056656374	3175056656471	3175056656568	3175056656665		5,5	
41	3175056656375	3175056656472	3175056656569	3175056656666		5,7	
43	3175056656376	3175056656473	3175056656570	3175056656667		6,0	
45	3175056656377	3175056656474	3175056656571	3175056656668		6,3	
47	3175056656378	3175056656475	3175056656572	3175056656669		6,6	
49	3175056656379	3175056656476	3175056656573	3175056656670		6,9	
51	3175056656380	3175056656477	3175056656574	3175056656671		7,1	
53	3175056656381	3175056656478	3175056656575	3175056656672	675	7,4	//
55	3175056656382	3175056656479	3175056656576	3175056656673		7,7	
57	3175056656383	3175056656480	3175056656577	3175056656674		8,0	
59	3175056656384	3175056656481	3175056656578	3175056656675		8,3	
61	3175056656385	3175056656482	3175056656579	3175056656676		8,5	
63	3175056656386	3175056656483	3175056656580	3175056656677		8,8	
65	3175056656387	3175056656484	3175056656581	3175056656678		9,1	
67	3175056656388	3175056656485	3175056656582	3175056656679		9,4	
69	3175056656389	3175056656486	3175056656583	3175056656680		9,7	
71	3175056656390	3175056656487	3175056656584	3175056656681		9,9	

For the operating conditions, please consult our online tool at www.cordivari.it.
(*) The codes shown refer to the heat exchanger configuration with H-geometry plates. For M and L plate geometries, please contact your local agency to obtain the corresponding sales code.

HEAT EXCHANGERS **PHC 3080**

INSPECTIONABLE PLATE TO PLATE HEAT EXCHANGERS

SUPPORT FEET INCLUDED

Nr. Plates	**With EPDM gaskets** **PN10 VERSION** Art. Nr.(*)	**PN16 VERSION** with surcharge	**With NBR gaskets** **PN10 VERSION** Art. Nr.(*)	**PN16 VERSION** with surcharge	L [mm]	Prim.=Sec. Volume [lt]	Art. Nr. Insulation
73	3175056656391	3175056656488	3175056656585	3175056656682	675	10,2	5655000610035
75	3175056656392	3175056656489	3175056656586	3175056656683		10,5	
77	3175056656393	3175056656490	3175056656587	3175056656684		10,8	
79	3175056656394	3175056656491	3175056656588	3175056656685		11,1	
81	3175056656395	3175056656492	3175056656589	3175056656686		11,3	
83	3175056656396	3175056656493	3175056656590	3175056656687		11,6	
85	3175056656397	3175056656494	3175056656591	3175056656688		11,9	
87	3175056656398	3175056656495	3175056656592	3175056656689		12,2	
89	3175056656399	3175056656496	3175056656593	3175056656690		12,5	
91	3175056656400	3175056656497	3175056656594	3175056656691		12,7	
93	3175056656401	3175056656498	3175056656595	3175056656692		13,0	
95	3175056656402	3175056656499	3175056656596	3175056656693		13,3	
97	3175056656403	3175056656500	3175056656597	3175056656694		13,6	
99	3175056656404	3175056656501	3175056656598	3175056656695		13,9	
101	3175056656405	3175056656502	3175056656599	3175056656696		14,1	
103	3175056656406	3175056656503	3175056656600	3175056656697		14,4	
105	3175056656407	3175056656504	3175056656601	3175056656698	825	14,7	
107	3175056656408	3175056656505	3175056656602	3175056656699		15,0	
109	3175056656409	3175056656506	3175056656603	3175056656700		15,3	
111	3175056656410	3175056656507	3175056656604	3175056656701		15,5	
113	3175056656411	3175056656508	3175056656605	3175056656702		15,8	
115	3175056656412	3175056656509	3175056656606	3175056656703		16,1	
117	3175056656413	3175056656510	3175056656607	3175056656704		16,4	
119	3175056656414	3175056656511	3175056656608	3175056656705		16,7	
121	3175056656415	3175056656512	3175056656609	3175056656706		16,9	
123	3175056656416	3175056656513	3175056656610	3175056656707		17,2	
125	3175056656417	3175056656514	3175056656611	3175056656708		17,5	
127	3175056656418	3175056656515	3175056656612	3175056656709		17,8	
129	3175056656419	3175056656516	3175056656613	3175056656710		18,1	
131	3175056656420	3175056656517	3175056656614	3175056656711		18,3	
133	3175056656421	3175056656518	3175056656615	3175056656712		18,6	
135	3175056656422	3175056656519	3175056656616	3175056656713		18,9	
137	3175056656423	3175056656520	3175056656617	3175056656714		19,2	
139	3175056656424	3175056656521	3175056656618	3175056656715		19,5	
141	3175056656425	3175056656522	3175056656619	3175056656716		19,7	
143	3175056656426	3175056656523	3175056656620	3175056656717		20,0	
145	3175056656427	3175056656524	3175056656621	3175056656718		20,3	
147	3175056656428	3175056656525	3175056656622	3175056656719		20,6	
149	3175056656429	3175056656526	3175056656623	3175056656720		20,9	
151	3175056656430	3175056656527	3175056656624	3175056656721		21,1	
153	3175056656431	3175056656528	3175056656625	3175056656722		21,4	
155	3175056656432	3175056656529	3175056656626	3175056656723		21,7	
157	3175056656433	3175056656530	3175056656627	3175056656724	1025	22,0	5655000610027
159	3175056656434	3175056656531	3175056656628	3175056656725		22,3	
161	3175056656435	3175056656532	3175056656629	3175056656726		22,5	
163	3175056656436	3175056656533	3175056656630	3175056656727		22,8	
165	3175056656437	3175056656534	3175056656631	3175056656728		23,1	
167	3175056656438	3175056656535	3175056656632	3175056656729		23,4	
169	3175056656439	3175056656536	3175056656633	3175056656730		23,7	
171	3175056656440	3175056656537	3175056656634	3175056656731		23,9	
173	3175056656441	3175056656538	3175056656635	3175056656732		24,2	
175	3175056656442	3175056656539	3175056656636	3175056656733		24,5	
177	3175056656443	3175056656540	3175056656637	3175056656734		24,8	
179	3175056656444	3175056656541	3175056656638	3175056656735		25,1	
181	3175056656445	3175056656542	3175056656639	3175056656736		25,3	
183	3175056656446	3175056656543	3175056656640	3175056656737		25,6	
185	3175056656447	3175056656544	3175056656641	3175056656738		25,9	
187	3175056656448	3175056656545	3175056656642	3175056656739		26,2	
189	3175056656449	3175056656546	3175056656643	3175056656740		26,5	
191	3175056656450	3175056656547	3175056656644	3175056656741		26,7	
193	3175056656451	3175056656548	3175056656645	3175056656742		27,0	
195	3175056656452	3175056656549	3175056656646	3175056656743		27,3	
197	3175056656453	3175056656550	3175056656647	3175056656744		27,6	
199	3175056656454	3175056656551	3175056656648	3175056656745		27,9	
201	3175056656455	3175056656552	3175056656649	3175056656746		28,1	
203	3175056656456	3175056656553	3175056656650	3175056656747		28,4	
205	3175056656457	3175056656554	3175056656651	3175056656748		28,7	

For the operating conditions, please consult our online tool at www.cordivari.it.

(*) The codes shown refer to the heat exchanger configuration with H-geometry plates. For M and L plate geometries, please contact your local agency to obtain the corresponding sales code.

HEAT EXCHANGERS **PHC 30120**

INSPECTIONABLE PLATE TO PLATE HEAT EXCHANGERS

SUPPORT FEET INCLUDED



PROMPT AVAILABILITY

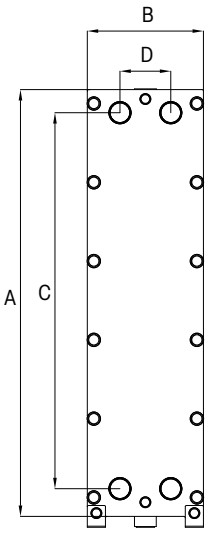

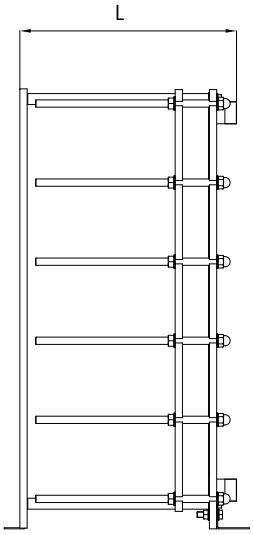

CONNECTIONS
DN50 (2") M-threaded

DIMENSIONS	
A [mm]	1206
B [mm]	320
C [mm]	1036
D [mm]	140

WORKING CONDITIONS		
GASKETS MODEL	MAX PRESSURE	TEMPERATURE [MIN./MAX]
NBR	10/16 bar	-10/+110°C(*)
EPDM	10/16 bar	-10/+140°C(*)

(*) Values intended as temperature limits for the seals. In any case, the minimum temperature must always be higher than the freezing temperature of both fluids and the temperature and pressure in the heat exchanger must always be lower than he operating limits indicated in Art. 4.3 of the PED directive 2014/68/EU (i.e. the maximum operating temperature must not exceed the lower temperature between the two circulating fluids, corresponding to the steam pressure of 0,5 bar above atmospheric pressure).

Nr. Plates	**With EPDM gaskets PN10 VERSION** Art. Nr.(*)	**PN16 VERSION** with surcharge	**With NBR gaskets PN10 VERSION** Art. Nr.(*)	**PN16 VERSION** with surcharge	L [mm]	Prim.=Sec. Volume [lt]	Art. Nr. Insulation
13	3175056656749	3175056656846	3175056656943	3175056657040	545	2,0	5655000610019
15	3175056656750	3175056656847	3175056656944	3175056657041		2,3	
17	3175056656751	3175056656848	3175056656945	3175056657042		2,6	
19	3175056656752	3175056656849	3175056656946	3175056657043		2,9	
21	3175056656753	3175056656850	3175056656947	3175056657044		3,2	
23	3175056656754	3175056656851	3175056656948	3175056657045		3,5	
25	3175056656755	3175056656852	3175056656949	3175056657046		3,9	
27	3175056656756	3175056656853	3175056656950	3175056657047		4,2	
29	3175056656757	3175056656854	3175056656951	3175056657048		4,5	
31	3175056656758	3175056656855	3175056656952	3175056657049		4,8	
33	3175056656759	3175056656856	3175056656953	3175056657050		5,1	
35	3175056656760	3175056656857	3175056656954	3175056657051		5,4	
37	3175056656761	3175056656858	3175056656955	3175056657052		5,7	
39	3175056656762	3175056656859	3175056656956	3175056657053		6,0	
41	3175056656763	3175056656860	3175056656957	3175056657054		6,3	
43	3175056656764	3175056656861	3175056656958	3175056657055		6,6	
45	3175056656765	3175056656862	3175056656959	3175056657056		6,9	
47	3175056656766	3175056656863	3175056656960	3175056657057		7,3	
49	3175056656767	3175056656864	3175056656961	3175056657058		7,6	
51	3175056656768	3175056656865	3175056656962	3175056657059		7,9	
53	3175056656769	3175056656866	3175056656963	3175056657060	675	8,2	
55	3175056656770	3175056656867	3175056656964	3175056657061		8,5	
57	3175056656771	3175056656868	3175056656965	3175056657062		8,8	
59	3175056656772	3175056656869	3175056656966	3175056657063		9,1	
61	3175056656773	3175056656870	3175056656967	3175056657064		9,4	
63	3175056656774	3175056656871	3175056656968	3175056657065		9,7	
65	3175056656775	3175056656872	3175056656969	3175056657066		10,0	
67	3175056656776	3175056656873	3175056656970	3175056657067		10,3	
69	3175056656777	3175056656874	3175056656971	3175056657068		10,6	
71	3175056656778	3175056656875	3175056656972	3175056657069		11,0	
73	3175056656779	3175056656876	3175056656973	3175056657070		11,3	
75	3175056656780	3175056656877	3175056656974	3175056657071		11,6	
77	3175056656781	3175056656878	3175056656975	3175056657072		11,9	
79	3175056656782	3175056656879	3175056656976	3175056657073		12,2	

For the operating conditions, please consult our online tool at www.cordivari.it.
(*) The codes shown refer to the heat exchanger configuration with H-geometry plates. For M and L plate geometries, please contact your local agency to obtain the corresponding sales code.

HEAT EXCHANGERS **PHC 30120**

INSPECTIONABLE PLATE TO PLATE HEAT EXCHANGERS

SUPPORT FEET INCLUDED

Nr. Plates	**With EPDM gaskets PN10 VERSION** Art. Nr.(*)	**PN16 VERSION** with surcharge	**With NBR gaskets PN10 VERSION** Art. Nr.(*)	**PN16 VERSION** with surcharge	L [mm]	Prim.=Sec. Volume [lt]	Art. Nr. Insulation
81	3175056656783	3175056656880	3175056656977	3175056657074	675	12,5	5655000610020
83	3175056656784	3175056656881	3175056656978	3175056657075		12,8	
85	3175056656785	3175056656882	3175056656979	3175056657076		13,1	
87	3175056656786	3175056656883	3175056656980	3175056657077		13,4	
89	3175056656787	3175056656884	3175056656981	3175056657078		13,7	
91	3175056656788	3175056656885	3175056656982	3175056657079		14,0	
93	3175056656789	3175056656886	3175056656983	3175056657080		14,3	
95	3175056656790	3175056656887	3175056656984	3175056657081		14,7	
97	3175056656791	3175056656888	3175056656985	3175056657082		15,0	
99	3175056656792	3175056656889	3175056656986	3175056657083		15,3	
101	3175056656793	3175056656890	3175056656987	3175056657084		15,6	
103	3175056656794	3175056656891	3175056656988	3175056657085		15,9	
105	3175056656795	3175056656892	3175056656989	3175056657086	825	16,2	
107	3175056656796	3175056656893	3175056656990	3175056657087		16,5	
109	3175056656797	3175056656894	3175056656991	3175056657088		16,8	
111	3175056656798	3175056656895	3175056656992	3175056657089		17,1	
113	3175056656799	3175056656896	3175056656993	3175056657090		17,4	
115	3175056656800	3175056656897	3175056656994	3175056657091		17,7	
117	3175056656801	3175056656898	3175056656995	3175056657092		18,1	
119	3175056656802	3175056656899	3175056656996	3175056657093		18,4	
121	3175056656803	3175056656900	3175056656997	3175056657094		18,7	
123	3175056656804	3175056656901	3175056656998	3175056657095		19,0	
125	3175056656805	3175056656902	3175056656999	3175056657096		19,3	
127	3175056656806	3175056656903	3175056657000	3175056657097		19,6	
129	3175056656807	3175056656904	3175056657001	3175056657098		19,9	
131	3175056656808	3175056656905	3175056657002	3175056657099		20,2	
133	3175056656809	3175056656906	3175056657003	3175056657100		20,5	
135	3175056656810	3175056656907	3175056657004	3175056657101		20,8	
137	3175056656811	3175056656908	3175056657005	3175056657102		21,1	
139	3175056656812	3175056656909	3175056657006	3175056657103		21,4	
141	3175056656813	3175056656910	3175056657007	3175056657104		21,8	
143	3175056656814	3175056656911	3175056657008	3175056657105		22,1	
145	3175056656815	3175056656912	3175056657009	3175056657106		22,4	
147	3175056656816	3175056656913	3175056657010	3175056657107		22,7	
149	3175056656817	3175056656914	3175056657011	3175056657108		23,0	
151	3175056656818	3175056656915	3175056657012	3175056657109		23,3	
153	3175056656819	3175056656916	3175056657013	3175056657110		23,6	
155	3175056656820	3175056656917	3175056657014	3175056657111		23,9	
157	3175056656821	3175056656918	3175056657015	3175056657112	1025	24,2	
159	3175056656822	3175056656919	3175056657016	3175056657113		24,5	
161	3175056656823	3175056656920	3175056657017	3175056657114		24,8	
163	3175056656824	3175056656921	3175056657018	3175056657115		25,2	
165	3175056656825	3175056656922	3175056657019	3175056657116		25,5	
167	3175056656826	3175056656923	3175056657020	3175056657117		25,8	
169	3175056656827	3175056656924	3175056657021	3175056657118		26,1	
171	3175056656828	3175056656925	3175056657022	3175056657119		26,4	
173	3175056656829	3175056656926	3175056657023	3175056657120		26,7	
175	3175056656830	3175056656927	3175056657024	3175056657121		27,0	
177	3175056656831	3175056656928	3175056657025	3175056657122		27,3	
179	3175056656832	3175056656929	3175056657026	3175056657123		27,6	
181	3175056656833	3175056656930	3175056657027	3175056657124		27,9	
183	3175056656834	3175056656931	3175056657028	3175056657125		28,2	
185	3175056656835	3175056656932	3175056657029	3175056657126		28,5	
187	3175056656836	3175056656933	3175056657030	3175056657127		28,9	
189	3175056656837	3175056656934	3175056657031	3175056657128		29,2	
191	3175056656838	3175056656935	3175056657032	3175056657129		29,5	
193	3175056656839	3175056656936	3175056657033	3175056657130		29,8	
195	3175056656840	3175056656937	3175056657034	3175056657131		30,1	
197	3175056656841	3175056656938	3175056657035	3175056657132		30,4	
199	3175056656842	3175056656939	3175056657036	3175056657133		30,7	
201	3175056656843	3175056656940	3175056657037	3175056657134		31,0	
203	3175056656844	3175056656941	3175056657038	3175056657135		31,3	
205	3175056656845	3175056656942	3175056657039	3175056657136		31,6	

For the operating conditions, please consult our online tool at www.cordivari.it.

(*) The codes shown refer to the heat exchanger configuration with H-geometry plates. For M and L plate geometries, please contact your local agency to obtain the corresponding sales code.

HEAT EXCHANGERS **PHC 4060**

INSPECTIONABLE PLATE TO PLATE HEAT EXCHANGERS

SUPPORT FEET INCLUDED



PROMPT AVAILABILITY

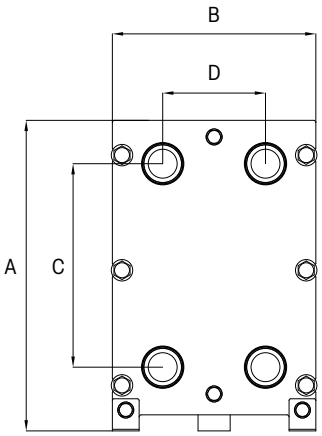

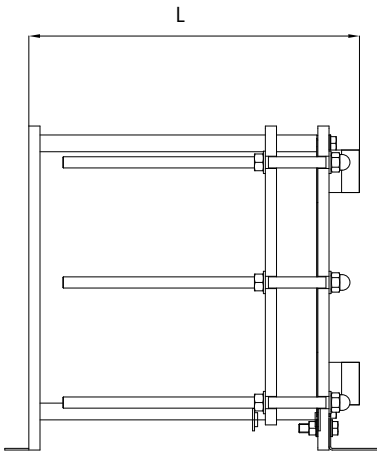

CONNECTIONS
DN65 (2" 1/2) M-threaded

DIMENSIONS	
A [mm]	580
B [mm]	380
C [mm]	380
D [mm]	192

WORKING CONDITIONS		
GASKETS MODEL	MAX PRESSURE	TEMPERATURE [MIN./MAX]
NBR	10/16 bar	-10/+110°C(*)
EPDM	10/16 bar	-10/+140°C(*)

(*) Values intended as temperature limits for the seals. In any case, the minimum temperature must always be higher than the freezing temperature of both fluids and the temperature and pressure in the heat exchanger must always be lower than he operating limits indicated in Art. 4.3 of the PED directive 2014/68/EU (i.e. the maximum operating temperature must not exceed the lower temperature between the two circulating fluids, corresponding to the steam pressure of 0,5 bar above atmospheric pressure).

Nr. Plates	**With EPDM gaskets PN10 VERSION** Art. Nr.(*)	**PN16 VERSION** with surcharge	**With NBR gaskets PN10 VERSION** Art. Nr.(*)	**PN16 VERSION** with surcharge	L [mm]	Prim.=Sec. Volume [lt]	Art. Nr. Insulation
13	3175056657137	3175056657234	3175056657331	3175056657428	545	1,7	5655000610021
15	3175056657138	3175056657235	3175056657332	3175056657429		2,0	
17	3175056657139	3175056657236	3175056657333	3175056657430		2,2	
19	3175056657140	3175056657237	3175056657334	3175056657431		2,5	
21	3175056657141	3175056657238	3175056657335	3175056657432		2,7	
23	3175056657142	3175056657239	3175056657336	3175056657433		3,0	
25	3175056657143	3175056657240	3175056657337	3175056657434		3,3	
27	3175056657144	3175056657241	3175056657338	3175056657435		3,5	
29	3175056657145	3175056657242	3175056657339	3175056657436		3,8	
31	3175056657146	3175056657243	3175056657340	3175056657437		4,0	
33	3175056657147	3175056657244	3175056657341	3175056657438		4,3	
35	3175056657148	3175056657245	3175056657342	3175056657439		4,6	
37	3175056657149	3175056657246	3175056657343	3175056657440		4,8	
39	3175056657150	3175056657247	3175056657344	3175056657441		5,1	
41	3175056657151	3175056657248	3175056657345	3175056657442		5,3	
43	3175056657152	3175056657249	3175056657346	3175056657443		5,6	
45	3175056657153	3175056657250	3175056657347	3175056657444		5,9	
47	3175056657154	3175056657251	3175056657348	3175056657445		6,1	
49	3175056657155	3175056657252	3175056657349	3175056657446		6,4	
51	3175056657156	3175056657253	3175056657350	3175056657447		6,6	
53	3175056657157	3175056657254	3175056657351	3175056657448	675	6,9	
55	3175056657158	3175056657255	3175056657352	3175056657449		7,2	
57	3175056657159	3175056657256	3175056657353	3175056657450		7,4	
59	3175056657160	3175056657257	3175056657354	3175056657451		7,7	
61	3175056657161	3175056657258	3175056657355	3175056657452		7,9	
63	3175056657162	3175056657259	3175056657356	3175056657453		8,2	
65	3175056657163	3175056657260	3175056657357	3175056657454		8,5	
67	3175056657164	3175056657261	3175056657358	3175056657455		8,7	
69	3175056657165	3175056657262	3175056657359	3175056657456		9,0	
71	3175056657166	3175056657263	3175056657360	3175056657457		9,2	
73	3175056657167	3175056657264	3175056657361	3175056657458		9,5	
75	3175056657168	3175056657265	3175056657362	3175056657459		9,8	
77	3175056657169	3175056657266	3175056657363	3175056657460		10,0	
79	3175056657170	3175056657267	3175056657364	3175056657461		10,3	

For the operating conditions, please consult our online tool at www.cordivari.it.
(*) The codes shown refer to the heat exchanger configuration with H-geometry plates. For M and L plate geometries, please contact your local agency to obtain the corresponding sales code.

HEAT EXCHANGERS **PHC 4060**

INSPECTIONABLE PLATE TO PLATE HEAT EXCHANGERS

SUPPORT FEET INCLUDED

Nr. Plates	**With EPDM gaskets** **PN10 VERSION** Art. Nr.(*)	**PN16 VERSION** with surcharge	**With NBR gaskets** **PN10 VERSION** Art. Nr.(*)	**PN16 VERSION** with surcharge	L [mm]	Prim.=Sec. Volume [lt]	Art. Nr. Insulation
81	3175056657171	3175056657268	3175056657365	3175056657462	675	10,5	5655000610022
83	3175056657172	3175056657269	3175056657366	3175056657463		10,8	
85	3175056657173	3175056657270	3175056657367	3175056657464		11,1	
87	3175056657174	3175056657271	3175056657368	3175056657465		11,3	
89	3175056657175	3175056657272	3175056657369	3175056657466		11,6	
91	3175056657176	3175056657273	3175056657370	3175056657467		11,8	
93	3175056657177	3175056657274	3175056657371	3175056657468		12,1	
95	3175056657178	3175056657275	3175056657372	3175056657469		12,4	
97	3175056657179	3175056657276	3175056657373	3175056657470		12,6	
99	3175056657180	3175056657277	3175056657374	3175056657471		12,9	
101	3175056657181	3175056657278	3175056657375	3175056657472		13,1	
103	3175056657182	3175056657279	3175056657376	3175056657473		13,4	
105	3175056657183	3175056657280	3175056657377	3175056657474	825	13,7	
107	3175056657184	3175056657281	3175056657378	3175056657475		13,9	
109	3175056657185	3175056657282	3175056657379	3175056657476		14,2	
111	3175056657186	3175056657283	3175056657380	3175056657477		14,4	
113	3175056657187	3175056657284	3175056657381	3175056657478		14,7	
115	3175056657188	3175056657285	3175056657382	3175056657479		15,0	
117	3175056657189	3175056657286	3175056657383	3175056657480		15,2	
119	3175056657190	3175056657287	3175056657384	3175056657481		15,5	
121	3175056657191	3175056657288	3175056657385	3175056657482		15,7	
123	3175056657192	3175056657289	3175056657386	3175056657483		16,0	
125	3175056657193	3175056657290	3175056657387	3175056657484		16,3	
127	3175056657194	3175056657291	3175056657388	3175056657485		16,5	
129	3175056657195	3175056657292	3175056657389	3175056657486		16,8	
131	3175056657196	3175056657293	3175056657390	3175056657487		17,0	
133	3175056657197	3175056657294	3175056657391	3175056657488		17,3	
135	3175056657198	3175056657295	3175056657392	3175056657489		17,6	
137	3175056657199	3175056657296	3175056657393	3175056657490		17,8	
139	3175056657200	3175056657297	3175056657394	3175056657491		18,1	
141	3175056657201	3175056657298	3175056657395	3175056657492		18,3	
143	3175056657202	3175056657299	3175056657396	3175056657493		18,6	
145	3175056657203	3175056657300	3175056657397	3175056657494		18,9	
147	3175056657204	3175056657301	3175056657398	3175056657495		19,1	
149	3175056657205	3175056657302	3175056657399	3175056657496		19,4	
151	3175056657206	3175056657303	3175056657400	3175056657497		19,6	
153	3175056657207	3175056657304	3175056657401	3175056657498		19,9	
155	3175056657208	3175056657305	3175056657402	3175056657499		20,2	
157	3175056657209	3175056657306	3175056657403	3175056657500	1025	20,4	
159	3175056657210	3175056657307	3175056657404	3175056657501		20,7	
161	3175056657211	3175056657308	3175056657405	3175056657502		20,9	
163	3175056657212	3175056657309	3175056657406	3175056657503		21,2	
165	3175056657213	3175056657310	3175056657407	3175056657504		21,5	
167	3175056657214	3175056657311	3175056657408	3175056657505		21,7	
169	3175056657215	3175056657312	3175056657409	3175056657506		22,0	
171	3175056657216	3175056657313	3175056657410	3175056657507		22,2	
173	3175056657217	3175056657314	3175056657411	3175056657508		22,5	
175	3175056657218	3175056657315	3175056657412	3175056657509		22,8	
177	3175056657219	3175056657316	3175056657413	3175056657510		23,0	
179	3175056657220	3175056657317	3175056657414	3175056657511		23,3	
181	3175056657221	3175056657318	3175056657415	3175056657512		23,5	
183	3175056657222	3175056657319	3175056657416	3175056657513		23,8	
185	3175056657223	3175056657320	3175056657417	3175056657514		24,1	
187	3175056657224	3175056657321	3175056657418	3175056657515		24,3	
189	3175056657225	3175056657322	3175056657419	3175056657516		24,6	
191	3175056657226	3175056657323	3175056657420	3175056657517		24,8	
193	3175056657227	3175056657324	3175056657421	3175056657518		25,1	
195	3175056657228	3175056657325	3175056657422	3175056657519		25,4	
197	3175056657229	3175056657326	3175056657423	3175056657520		25,6	
199	3175056657230	3175056657327	3175056657424	3175056657521		25,9	
201	3175056657231	3175056657328	3175056657425	3175056657522		26,1	
203	3175056657232	3175056657329	3175056657426	3175056657523		26,4	
205	3175056657233	3175056657330	3175056657427	3175056657524		26,7	

For the operating conditions, please consult our online tool at www.cordivari.it.

(*) The codes shown refer to the heat exchanger configuration with H-geometry plates. For M and L plate geometries, please contact your local agency to obtain the corresponding sales code.

HEAT EXCHANGERS **PHC 4090**

INSPECTIONABLE PLATE TO PLATE HEAT EXCHANGERS

SUPPORT FEET INCLUDED

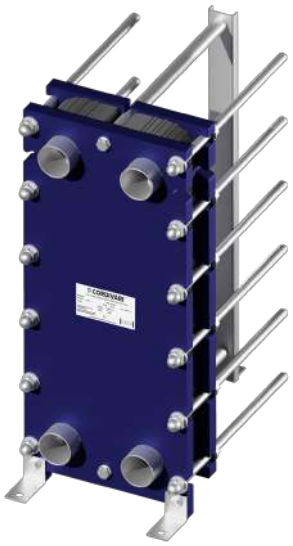

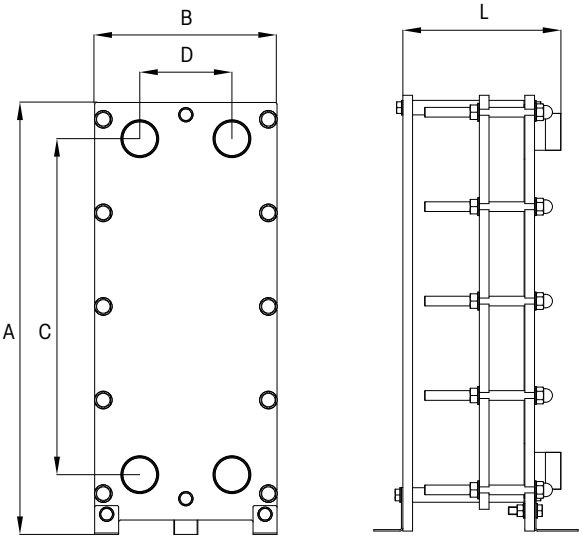

CONNECTIONS
DN65 (2" 1/2) M-threaded

DIMENSIONS	
A [mm]	900
B [mm]	380
C [mm]	700
D [mm]	192

WORKING CONDITIONS		
GASKETS MODEL	MAX PRESSURE	TEMPERATURE [MIN./MAX]
NBR	10/16 bar	-10/+110°C(*)
EPDM	10/16 bar	-10/+140°C(*)

(*) Values intended as temperature limits for the seals. In any case, the minimum temperature must always be higher than the freezing temperature of both fluids and the temperature and pressure in the heat exchanger must always be lower than he operating limits indicated in Art. 4.3 of the PED directive 2014/68/EU (i.e. the maximum operating temperature must not exceed the lower temperature between the two circulating fluids, corresponding to the steam pressure of 0,5 bar above atmospheric pressure).

Nr. Plates	**With EPDM gaskets PN10 VERSION**	**PN16 VERSION** with surcharge	**With NBR gaskets PN10 VERSION**	**PN16 VERSION** with surcharge	L	Prim.=Sec.	Art. Nr. Insulation
	Art. Nr.(*)		Art. Nr.(*)		[mm]	Volume [lt]	
13	3175056657525	3175056657622	3175056657719	3175056657816	545	3,1	5655000610023
15	3175056657526	3175056657623	3175056657720	3175056657817		3,6	
17	3175056657527	3175056657624	3175056657721	3175056657818		4,1	
19	3175056657528	3175056657625	3175056657722	3175056657819		4,6	
21	3175056657529	3175056657626	3175056657723	3175056657820		5,0	
23	3175056657530	3175056657627	3175056657724	3175056657821		5,5	
25	3175056657531	3175056657628	3175056657725	3175056657822		6,0	
27	3175056657532	3175056657629	3175056657726	3175056657823		6,5	
29	3175056657533	3175056657630	3175056657727	3175056657824		6,9	
31	3175056657534	3175056657631	3175056657728	3175056657825		7,4	
33	3175056657535	3175056657632	3175056657729	3175056657826		7,9	
35	3175056657536	3175056657633	3175056657730	3175056657827		8,4	
37	3175056657537	3175056657634	3175056657731	3175056657828		8,9	
39	3175056657538	3175056657635	3175056657732	3175056657829		9,3	
41	3175056657539	3175056657636	3175056657733	3175056657830		9,8	
43	3175056657540	3175056657637	3175056657734	3175056657831		10,3	
45	3175056657541	3175056657638	3175056657735	3175056657832		10,8	
47	3175056657542	3175056657639	3175056657736	3175056657833		11,3	
49	3175056657543	3175056657640	3175056657737	3175056657834		11,7	
51	3175056657544	3175056657641	3175056657738	3175056657835		12,2	
53	3175056657545	3175056657642	3175056657739	3175056657836	675	12,7	
55	3175056657546	3175056657643	3175056657740	3175056657837		13,2	
57	3175056657547	3175056657644	3175056657741	3175056657838		13,7	
59	3175056657548	3175056657645	3175056657742	3175056657839		14,1	
61	3175056657549	3175056657646	3175056657743	3175056657840		14,6	
63	3175056657550	3175056657647	3175056657744	3175056657841		15,1	
65	3175056657551	3175056657648	3175056657745	3175056657842		15,6	
67	3175056657552	3175056657649	3175056657746	3175056657843		16,0	
69	3175056657553	3175056657650	3175056657747	3175056657844		16,5	
71	3175056657554	3175056657651	3175056657748	3175056657845		17,0	
73	3175056657555	3175056657652	3175056657749	3175056657846		17,5	
75	3175056657556	3175056657653	3175056657750	3175056657847		18,0	
77	3175056657557	3175056657654	3175056657751	3175056657848		18,4	
79	3175056657558	3175056657655	3175056657752	3175056657849		18,9	

For the operating conditions, please consult our online tool at www.cordivari.it.
(*) The codes shown refer to the heat exchanger configuration with H-geometry plates. For M and L plate geometries, please contact your local agency to obtain the corresponding sales code.

HEAT EXCHANGERS **PHC 4090**

INSPECTIONABLE PLATE TO PLATE HEAT EXCHANGERS

SUPPORT FEET INCLUDED

Nr. Plates	**With EPDM gaskets PN10 VERSION** Art. Nr.(*)	**PN16 VERSION** with surcharge	**With NBR gaskets PN10 VERSION** Art. Nr.(*)	**PN16 VERSION** with surcharge	L [mm]	Prim.=Sec. Volume [lt]	Art. Nr. Insulation
81	3175056657559	3175056657656	3175056657753	3175056657850	675	19,4	5655000610024
83	3175056657560	3175056657657	3175056657754	3175056657851		19,9	
85	3175056657561	3175056657658	3175056657755	3175056657852		20,4	
87	3175056657562	3175056657659	3175056657756	3175056657853		20,8	
89	3175056657563	3175056657660	3175056657757	3175056657854		21,3	
91	3175056657564	3175056657661	3175056657758	3175056657855		21,8	
93	3175056657565	3175056657662	3175056657759	3175056657856		22,3	
95	3175056657566	3175056657663	3175056657760	3175056657857		22,8	
97	3175056657567	3175056657664	3175056657761	3175056657858		23,2	
99	3175056657568	3175056657665	3175056657762	3175056657859		23,7	
101	3175056657569	3175056657666	3175056657763	3175056657860		24,2	
103	3175056657570	3175056657667	3175056657764	3175056657861		24,7	
105	3175056657571	3175056657668	3175056657765	3175056657862	825	25,1	
107	3175056657572	3175056657669	3175056657766	3175056657863		25,6	
109	3175056657573	3175056657670	3175056657767	3175056657864		26,1	
111	3175056657574	3175056657671	3175056657768	3175056657865		26,6	
113	3175056657575	3175056657672	3175056657769	3175056657866		27,1	
115	3175056657576	3175056657673	3175056657770	3175056657867		27,5	
117	3175056657577	3175056657674	3175056657771	3175056657868		28,0	
119	3175056657578	3175056657675	3175056657772	3175056657869		28,5	
121	3175056657579	3175056657676	3175056657773	3175056657870		29,0	
123	3175056657580	3175056657677	3175056657774	3175056657871		29,5	
125	3175056657581	3175056657678	3175056657775	3175056657872		29,9	
127	3175056657582	3175056657679	3175056657776	3175056657873		30,4	
129	3175056657583	3175056657680	3175056657777	3175056657874		30,9	
131	3175056657584	3175056657681	3175056657778	3175056657875		31,4	
133	3175056657585	3175056657682	3175056657779	3175056657876		31,9	
135	3175056657586	3175056657683	3175056657780	3175056657877		32,3	
137	3175056657587	3175056657684	3175056657781	3175056657878		32,8	
139	3175056657588	3175056657685	3175056657782	3175056657879		33,3	
141	3175056657589	3175056657686	3175056657783	3175056657880		33,8	
143	3175056657590	3175056657687	3175056657784	3175056657881		34,2	
145	3175056657591	3175056657688	3175056657785	3175056657882		34,7	
147	3175056657592	3175056657689	3175056657786	3175056657883		35,2	
149	3175056657593	3175056657690	3175056657787	3175056657884		35,7	
151	3175056657594	3175056657691	3175056657788	3175056657885		36,2	
153	3175056657595	3175056657692	3175056657789	3175056657886		36,6	
155	3175056657596	3175056657693	3175056657790	3175056657887		37,1	
157	3175056657597	3175056657694	3175056657791	3175056657888	1025	37,6	
159	3175056657598	3175056657695	3175056657792	3175056657889		38,1	
161	3175056657599	3175056657696	3175056657793	3175056657890		38,6	
163	3175056657600	3175056657697	3175056657794	3175056657891		39,0	
165	3175056657601	3175056657698	3175056657795	3175056657892		39,5	
167	3175056657602	3175056657699	3175056657796	3175056657893		40,0	
169	3175056657603	3175056657700	3175056657797	3175056657894		40,5	
171	3175056657604	3175056657701	3175056657798	3175056657895		41,0	
173	3175056657605	3175056657702	3175056657799	3175056657896		41,4	
175	3175056657606	3175056657703	3175056657800	3175056657897		41,9	
177	3175056657607	3175056657704	3175056657801	3175056657898		42,4	
179	3175056657608	3175056657705	3175056657802	3175056657899		42,9	
181	3175056657609	3175056657706	3175056657803	3175056657900		43,3	
183	3175056657610	3175056657707	3175056657804	3175056657901		43,8	
185	3175056657611	3175056657708	3175056657805	3175056657902		44,3	
187	3175056657612	3175056657709	3175056657806	3175056657903		44,8	
189	3175056657613	3175056657710	3175056657807	3175056657904		45,3	
191	3175056657614	3175056657711	3175056657808	3175056657905		45,7	
193	3175056657615	3175056657712	3175056657809	3175056657906		46,2	
195	3175056657616	3175056657713	3175056657810	3175056657907		46,7	
197	3175056657617	3175056657714	3175056657811	3175056657908		47,2	
199	3175056657618	3175056657715	3175056657812	3175056657909		47,7	
201	3175056657619	3175056657716	3175056657813	3175056657910		48,1	
203	3175056657620	3175056657717	3175056657814	3175056657911		48,6	
205	3175056657621	3175056657718	3175056657815	3175056657912		49,1	

For the operating conditions, please consult our online tool at www.cordivari.it.

(*) The codes shown refer to the heat exchanger configuration with H-geometry plates. For M and L plate geometries, please contact your local agency to obtain the corresponding sales code.

HEAT EXCHANGERS **PHC 40125**

INSPECTIONABLE PLATE TO PLATE HEAT EXCHANGERS

SUPPORT FEET INCLUDED



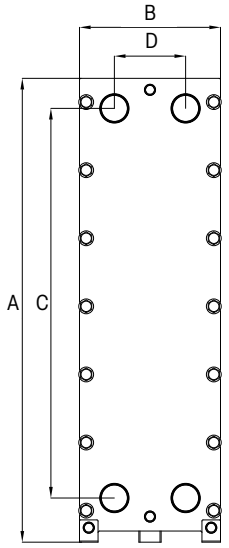

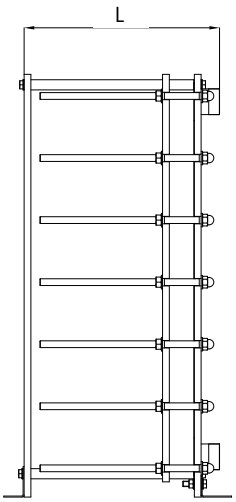

CONNECTIONS
DN65 (2" 1/2) M-threaded

DIMENSIONS	
A [mm]	1250
B [mm]	380
C [mm]	1050
D [mm]	192

WORKING CONDITIONS		
GASKETS MODEL	MAX PRESSURE	TEMPERATURE [MIN./MAX]
NBR	10/16 bar	-10/+110°C(*)
EPDM	10/16 bar	-10/+140°C(*)

(*) Values intended as temperature limits for the seals. In any case, the minimum temperature must always be higher than the freezing temperature of both fluids and the temperature and pressure in the heat exchanger must always be lower than he operating limits indicated in Art. 4.3 of the PED directive 2014/68/EU (i.e. the maximum operating temperature must not exceed the lower temperature between the two circulating fluids, corresponding to the steam pressure of 0,5 bar above atmospheric pressure).

Nr. Plates	**With EPDM gaskets PN10 VERSION** Art. Nr.(*)	**PN16 VERSION** with surcharge	**With NBR gaskets PN10 VERSION** Art. Nr.(*)	**PN16 VERSION** with surcharge	L [mm]	Prim.=Sec. Volume [lt]	Art. Nr. Insulation
13	3175056657913	3175056658010	3175056658107	3175056658204	545	4,7	5655000610025
15	3175056657914	3175056658011	3175056658108	3175056658205		5,4	
17	3175056657915	3175056658012	3175056658109	3175056658206		6,1	
19	3175056657916	3175056658013	3175056658110	3175056658207		6,8	
21	3175056657917	3175056658014	3175056658111	3175056658208		7,5	
23	3175056657918	3175056658015	3175056658112	3175056658209		8,3	
25	3175056657919	3175056658016	3175056658113	3175056658210		9,0	
27	3175056657920	3175056658017	3175056658114	3175056658211		9,7	
29	3175056657921	3175056658018	3175056658115	3175056658212		10,4	
31	3175056657922	3175056658019	3175056658116	3175056658213		11,1	
33	3175056657923	3175056658020	3175056658117	3175056658214		11,9	
35	3175056657924	3175056658021	3175056658118	3175056658215		12,6	
37	3175056657925	3175056658022	3175056658119	3175056658216		13,3	
39	3175056657926	3175056658023	3175056658120	3175056658217		14,0	
41	3175056657927	3175056658024	3175056658121	3175056658218		14,7	
43	3175056657928	3175056658025	3175056658122	3175056658219		15,4	
45	3175056657929	3175056658026	3175056658123	3175056658220		16,2	
47	3175056657930	3175056658027	3175056658124	3175056658221		16,9	
49	3175056657931	3175056658028	3175056658125	3175056658222		17,6	
51	3175056657932	3175056658029	3175056658126	3175056658223		18,3	
53	3175056657933	3175056658030	3175056658127	3175056658224	675	19,0	
55	3175056657934	3175056658031	3175056658128	3175056658225		19,8	
57	3175056657935	3175056658032	3175056658129	3175056658226		20,5	
59	3175056657936	3175056658033	3175056658130	3175056658227		21,2	
61	3175056657937	3175056658034	3175056658131	3175056658228		21,9	
63	3175056657938	3175056658035	3175056658132	3175056658229		22,6	
65	3175056657939	3175056658036	3175056658133	3175056658230		23,3	
67	3175056657940	3175056658037	3175056658134	3175056658231		24,1	
69	3175056657941	3175056658038	3175056658135	3175056658232		24,8	
71	3175056657942	3175056658039	3175056658136	3175056658233		25,5	
73	3175056657943	3175056658040	3175056658137	3175056658234		26,2	
75	3175056657944	3175056658041	3175056658138	3175056658235		26,9	
77	3175056657945	3175056658042	3175056658139	3175056658236		27,7	
79	3175056657946	3175056658043	3175056658140	3175056658237		28,4	

For the operating conditions, please consult our online tool at www.cordivari.it.
(*) The codes shown refer to the heat exchanger configuration with H-geometry plates. For M and L plate geometries, please contact your local agency to obtain the corresponding sales code.

HEAT EXCHANGERS **PHC 40125**

INSPECTIONABLE PLATE TO PLATE HEAT EXCHANGERS

SUPPORT FEET INCLUDED

Nr. Plates	**With EPDM gaskets** **PN10 VERSION**	**PN16 VERSION** with surcharge	**With NBR gaskets** **PN10 VERSION**	**PN16 VERSION** with surcharge	L	Prim.=Sec.	Art. Nr. Insulation
	Art. Nr.(*)		Art. Nr.(*)		[mm]	Volume [lt]	
81	3175056657947	3175056658044	3175056658141	3175056658238	675	29,1	
83	3175056657948	3175056658045	3175056658142	3175056658239		29,8	
85	3175056657949	3175056658046	3175056658143	3175056658240		30,5	
87	3175056657950	3175056658047	3175056658144	3175056658241		31,3	
89	3175056657951	3175056658048	3175056658145	3175056658242		32,0	
91	3175056657952	3175056658049	3175056658146	3175056658243		32,7	
93	3175056657953	3175056658050	3175056658147	3175056658244		33,4	
95	3175056657954	3175056658051	3175056658148	3175056658245		34,1	
97	3175056657955	3175056658052	3175056658149	3175056658246		34,8	
99	3175056657956	3175056658053	3175056658150	3175056658247		35,6	
101	3175056657957	3175056658054	3175056658151	3175056658248		36,3	
103	3175056657958	3175056658055	3175056658152	3175056658249		37,0	
105	3175056657959	3175056658056	3175056658153	3175056658250	825	37,7	5655000610026
107	3175056657960	3175056658057	3175056658154	3175056658251		38,4	
109	3175056657961	3175056658058	3175056658155	3175056658252		39,2	
111	3175056657962	3175056658059	3175056658156	3175056658253		39,9	
113	3175056657963	3175056658060	3175056658157	3175056658254		40,6	
115	3175056657964	3175056658061	3175056658158	3175056658255		41,3	
117	3175056657965	3175056658062	3175056658159	3175056658256		42,0	
119	3175056657966	3175056658063	3175056658160	3175056658257		42,7	
121	3175056657967	3175056658064	3175056658161	3175056658258		43,5	
123	3175056657968	3175056658065	3175056658162	3175056658259		44,2	
125	3175056657969	3175056658066	3175056658163	3175056658260		44,9	
127	3175056657970	3175056658067	3175056658164	3175056658261		45,6	
129	3175056657971	3175056658068	3175056658165	3175056658262		46,3	
131	3175056657972	3175056658069	3175056658166	3175056658263		47,1	
133	3175056657973	3175056658070	3175056658167	3175056658264		47,8	
135	3175056657974	3175056658071	3175056658168	3175056658265		48,5	
137	3175056657975	3175056658072	3175056658169	3175056658266		49,2	
139	3175056657976	3175056658073	3175056658170	3175056658267		49,9	
141	3175056657977	3175056658074	3175056658171	3175056658268		50,6	
143	3175056657978	3175056658075	3175056658172	3175056658269		51,4	
145	3175056657979	3175056658076	3175056658173	3175056658270		52,1	
147	3175056657980	3175056658077	3175056658174	3175056658271		52,8	
149	3175056657981	3175056658078	3175056658175	3175056658272		53,5	
151	3175056657982	3175056658079	3175056658176	3175056658273		54,2	
153	3175056657983	3175056658080	3175056658177	3175056658274		55,0	
155	3175056657984	3175056658081	3175056658178	3175056658275		55,7	
157	3175056657985	3175056658082	3175056658179	3175056658276	1025	56,4	
159	3175056657986	3175056658083	3175056658180	3175056658277		57,1	
161	3175056657987	3175056658084	3175056658181	3175056658278		57,8	
163	3175056657988	3175056658085	3175056658182	3175056658279		58,6	
165	3175056657989	3175056658086	3175056658183	3175056658280		59,3	
167	3175056657990	3175056658087	3175056658184	3175056658281		60,0	
169	3175056657991	3175056658088	3175056658185	3175056658282		60,7	
171	3175056657992	3175056658089	3175056658186	3175056658283		61,4	
173	3175056657993	3175056658090	3175056658187	3175056658284		62,1	
175	3175056657994	3175056658091	3175056658188	3175056658285		62,9	
177	3175056657995	3175056658092	3175056658189	3175056658286		63,6	
179	3175056657996	3175056658093	3175056658190	3175056658287		64,3	
181	3175056657997	3175056658094	3175056658191	3175056658288		65,0	
183	3175056657998	3175056658095	3175056658192	3175056658289		65,7	
185	3175056657999	3175056658096	3175056658193	3175056658290		66,5	
187	3175056658000	3175056658097	3175056658194	3175056658291		67,2	
189	3175056658001	3175056658098	3175056658195	3175056658292		67,9	
191	3175056658002	3175056658099	3175056658196	3175056658293		68,6	
193	3175056658003	3175056658100	3175056658197	3175056658294		69,3	
195	3175056658004	3175056658101	3175056658198	3175056658295		70,0	
197	3175056658005	3175056658102	3175056658199	3175056658296		70,8	
199	3175056658006	3175056658103	3175056658200	3175056658297		71,5	
201	3175056658007	3175056658104	3175056658201	3175056658298		72,2	
203	3175056658008	3175056658105	3175056658202	3175056658299		72,9	
205	3175056658009	3175056658106	3175056658203	3175056658300		73,6	

For the operating conditions, please consult our online tool at www.cordivari.it.

(*) The codes shown refer to the heat exchanger configuration with H-geometry plates. For M and L plate geometries, please contact your local agency to obtain the corresponding sales code.

HEAT EXCHANGERS **PHC 45120**

INSPECTIONABLE PLATE TO PLATE HEAT EXCHANGERS

SUPPORT FEET INCLUDED



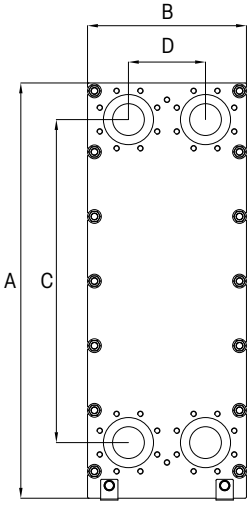

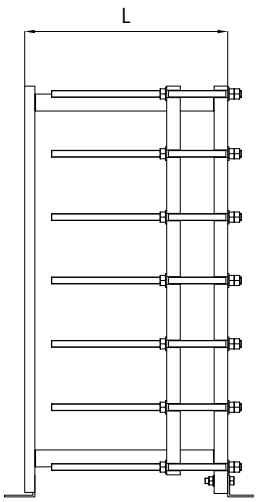

CONNECTIONS
FLANGED (ISO DN-100)

DIMENSIONS	
A [mm]	1197
B [mm]	460
C [mm]	935
D [mm]	223

WORKING CONDITIONS		
GASKETS MODEL	MAX PRESSURE	TEMPERATURE [MIN./MAX]
NBR	10/16 bar	-10/+110°C(*)
EPDM	10/16 bar	-10/+140°C(*)

(*) Values intended as temperature limits for the seals. In any case, the minimum temperature must always be higher than the freezing temperature of both fluids and the temperature and pressure in the heat exchanger must always be lower than he operating limits indicated in Art. 4.3 of the PED directive 2014/68/EU (i.e. the maximum operating temperature must not exceed the lower temperature between the two circulating fluids, corresponding to the steam pressure of 0,5 bar above atmospheric pressure).

Nr. Plates	**With EPDM gaskets PN10 VERSION** Art. Nr.(*)	**PN16 VERSION** with surcharge	**With NBR gaskets PN10 VERSION** Art. Nr.(*)	**PN16 VERSION** with surcharge	L [mm]	Prim.=Sec. Volume [lt]	Art. Nr. Insulation
13	3175056658301	3175056658402	3175056658503	3175056658604	550	5,5	5655000610036
15	3175056658302	3175056658403	3175056658504	3175056658605		6,3	
17	3175056658303	3175056658404	3175056658505	3175056658606		7,2	
19	3175056658304	3175056658405	3175056658506	3175056658607		8,0	
21	3175056658305	3175056658406	3175056658507	3175056658608		8,9	
23	3175056658306	3175056658407	3175056658508	3175056658609		9,7	
25	3175056658307	3175056658408	3175056658509	3175056658610		10,6	
27	3175056658308	3175056658409	3175056658510	3175056658611		11,4	
29	3175056658309	3175056658410	3175056658511	3175056658612		12,3	
31	3175056658310	3175056658411	3175056658512	3175056658613		13,1	
33	3175056658311	3175056658412	3175056658513	3175056658614		13,9	
35	3175056658312	3175056658413	3175056658514	3175056658615		14,8	
37	3175056658313	3175056658414	3175056658515	3175056658616		15,6	
39	3175056658314	3175056658415	3175056658516	3175056658617		16,5	
41	3175056658315	3175056658416	3175056658517	3175056658618		17,3	
43	3175056658316	3175056658417	3175056658518	3175056658619		18,2	
45	3175056658317	3175056658418	3175056658519	3175056658620		19,0	
47	3175056658318	3175056658419	3175056658520	3175056658621		19,9	
49	3175056658319	3175056658420	3175056658521	3175056658622		20,7	
51	3175056658320	3175056658421	3175056658522	3175056658623		21,6	
53	3175056658321	3175056658422	3175056658523	3175056658624		22,4	
55	3175056658322	3175056658423	3175056658524	3175056658625		23,2	
57	3175056658323	3175056658424	3175056658525	3175056658626		24,1	
59	3175056658324	3175056658425	3175056658526	3175056658627		24,9	
61	3175056658325	3175056658426	3175056658527	3175056658628		25,8	
63	3175056658326	3175056658427	3175056658528	3175056658629		26,6	
65	3175056658327	3175056658428	3175056658529	3175056658630		27,5	
67	3175056658328	3175056658429	3175056658530	3175056658631		28,3	
69	3175056658329	3175056658430	3175056658531	3175056658632		29,2	
71	3175056658330	3175056658431	3175056658532	3175056658633	710	30,0	
73	3175056658331	3175056658432	3175056658533	3175056658634		30,9	
75	3175056658332	3175056658433	3175056658534	3175056658635		31,7	
77	3175056658333	3175056658434	3175056658535	3175056658636		32,5	
79	3175056658334	3175056658435	3175056658536	3175056658637		33,4	

For the operating conditions, please consult our online tool at www.cordivari.it.
(*) The codes shown refer to the heat exchanger configuration with H-geometry plates. For M and L plate geometries, please contact your local agency to obtain the corresponding sales code.

HEAT EXCHANGERS **PHC 45120**

INSPECTIONABLE PLATE TO PLATE HEAT EXCHANGERS

SUPPORT FEET INCLUDED

Nr. Plates	**With EPDM gaskets PN10 VERSION** Art. Nr.(*)	**PN16 VERSION** with surcharge	**With NBR gaskets PN10 VERSION** Art. Nr.(*)	**PN16 VERSION** with surcharge	L [mm]	Prim.=Sec. Volume [lt]	Art. Nr. Insulation
81	3175056658335	3175056658436	3175056658537	3175056658638	710	34,2	5655000610037
83	3175056658336	3175056658437	3175056658538	3175056658639		35,1	
85	3175056658337	3175056658438	3175056658539	3175056658640		35,9	
87	3175056658338	3175056658439	3175056658540	3175056658641		36,8	
89	3175056658339	3175056658440	3175056658541	3175056658642		37,6	
91	3175056658340	3175056658441	3175056658542	3175056658643		38,5	
93	3175056658341	3175056658442	3175056658543	3175056658644		39,3	
95	3175056658342	3175056658443	3175056658544	3175056658645		40,2	
97	3175056658343	3175056658444	3175056658545	3175056658646		41,0	
99	3175056658344	3175056658445	3175056658546	3175056658647		41,9	
101	3175056658345	3175056658446	3175056658547	3175056658648		42,7	
103	3175056658346	3175056658447	3175056658548	3175056658649		43,5	
105	3175056658347	3175056658448	3175056658549	3175056658650		44,4	
107	3175056658348	3175056658449	3175056658550	3175056658651		45,2	
109	3175056658349	3175056658450	3175056658551	3175056658652		46,1	
111	3175056658350	3175056658451	3175056658552	3175056658653		46,9	
113	3175056658351	3175056658452	3175056658553	3175056658654		47,8	
115	3175056658352	3175056658453	3175056658554	3175056658655		48,6	
117	3175056658353	3175056658454	3175056658555	3175056658656	1250	49,5	
119	3175056658354	3175056658455	3175056658556	3175056658657		50,3	
121	3175056658355	3175056658456	3175056658557	3175056658658		51,2	
123	3175056658356	3175056658457	3175056658558	3175056658659		52,0	
125	3175056658357	3175056658458	3175056658559	3175056658660		52,8	
127	3175056658358	3175056658459	3175056658560	3175056658661		53,7	
129	3175056658359	3175056658460	3175056658561	3175056658662		54,5	
131	3175056658360	3175056658461	3175056658562	3175056658663		55,4	
133	3175056658361	3175056658462	3175056658563	3175056658664		56,2	
135	3175056658362	3175056658463	3175056658564	3175056658665		57,1	
137	3175056658363	3175056658464	3175056658565	3175056658666		57,9	
139	3175056658364	3175056658465	3175056658566	3175056658667		58,8	
141	3175056658365	3175056658466	3175056658567	3175056658668		59,6	
143	3175056658366	3175056658467	3175056658568	3175056658669		60,5	
145	3175056658367	3175056658468	3175056658569	3175056658670		61,3	
147	3175056658368	3175056658469	3175056658570	3175056658671		62,1	
149	3175056658369	3175056658470	3175056658571	3175056658672		63,0	
151	3175056658370	3175056658471	3175056658572	3175056658673		63,8	
153	3175056658371	3175056658472	3175056658573	3175056658674		64,7	
155	3175056658372	3175056658473	3175056658574	3175056658675		65,5	
157	3175056658373	3175056658474	3175056658575	3175056658676		66,4	
159	3175056658374	3175056658475	3175056658576	3175056658677		67,2	
161	3175056658375	3175056658476	3175056658577	3175056658678		68,1	
163	3175056658376	3175056658477	3175056658578	3175056658679		68,9	
165	3175056658377	3175056658478	3175056658579	3175056658680		69,8	
167	3175056658378	3175056658479	3175056658580	3175056658681		70,6	
169	3175056658379	3175056658480	3175056658581	3175056658682		71,5	
171	3175056658380	3175056658481	3175056658582	3175056658683		72,3	
173	3175056658381	3175056658482	3175056658583	3175056658684		73,1	
175	3175056658382	3175056658483	3175056658584	3175056658685		74,0	
177	3175056658383	3175056658484	3175056658585	3175056658686		74,8	
179	3175056658384	3175056658485	3175056658586	3175056658687		75,7	
181	3175056658385	3175056658486	3175056658587	3175056658688		76,5	
183	3175056658386	3175056658487	3175056658588	3175056658689		77,4	
185	3175056658387	3175056658488	3175056658589	3175056658690		78,2	
187	3175056658388	3175056658489	3175056658590	3175056658691		79,1	
189	3175056658389	3175056658490	3175056658591	3175056658692		79,9	
191	3175056658390	3175056658491	3175056658592	3175056658693		80,8	
193	3175056658391	3175056658492	3175056658593	3175056658694		81,6	
195	3175056658392	3175056658493	3175056658594	3175056658695		82,4	
197	3175056658393	3175056658494	3175056658595	3175056658696		83,3	
199	3175056658394	3175056658495	3175056658596	3175056658697		84,1	
201	3175056658395	3175056658496	3175056658597	3175056658698		85,0	
203	3175056658396	3175056658497	3175056658598	3175056658699		85,8	
205	3175056658397	3175056658498	3175056658599	3175056658700		86,7	
207	3175056658398	3175056658499	3175056658600	3175056658701		87,5	
209	3175056658399	3175056658500	3175056658601	3175056658702		88,4	
211	3175056658400	3175056658501	3175056658602	3175056658703		89,2	
213	3175056658401	3175056658502	3175056658603	3175056658704		90,1	

For the operating conditions, please consult our online tool at www.cordivari.it.

(*) The codes shown refer to the heat exchanger configuration with H-geometry plates. For M and L plate geometries, please contact your local agency to obtain the corresponding sales code.

BRAZED PLATE HEAT EXCHANGERS **SLB 15**

BRAZED PLATE HEAT EXCHANGERS



TECHNICAL DESCRIPTION

Cordivari SLB brazed plate heat exchangers represents the most compact and economic solution for many applications where it is necessary to exchange heat. The construction technology is based on the coupling of several stainless steel 316L plates. SLB plate heat exchangers are designed and manufactured for the production of domestic- and heating hot water, air-conditioning, refrigeration, evaporation and industrial processes.

MAIN ADVANTAGES:

- High Efficiency
- Long lifetime
- Savings
- High reliability
- Huge possibility to modify the relation between storage volume and Heat exchange

TECHNICAL CHARACTERISTIC:

Stainless steel AISI 316L brazed plate, braze-welded with 99,99% pure copper.

WORKING CONDITIONS		(*)Values intended as temperature limits for the seals. In any case, the minimum temperature must always be higher than the freezing temperature of both fluids and the temperature and pressure in the heat exchanger must always be lower than he operating limits indicated in Art. 4.3 of the PED directive 2014/68/EU (i.e. the maximum operating temperature must not exceed the lower temperature between the two circulating fluids, corresponding to the steam pressure of 0,5 bar above atmospheric pressure).
MAX PRESSURE	MAX TEMPERATURE	
10 bar	190 °C (*)	

PROMPT AVAILABILITY

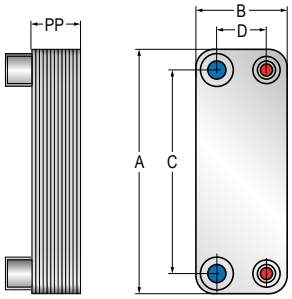

Connections 3/4" M		Maximum volumetric flow rate (recommended)
	[mm]	m^3/h
A	207	2,4
B	74	
C	172	
D	42	



Nr. Plates	**NOT INSULATED** VERSION	**INSULATED** VERSION	PP	Weight
	Art. Nr.	Art. Nr.	[mm]	[Kg]
10	3175056658808	3175056658838	25	0,62
20	3175056658809	3175056658839	47	1,02
30	3175056658810	3175056658840	70	1,42
40	3175056658811	3175056658841	93	1,82

BRAZED PLATE HEAT EXCHANGERS **SLB 20**

BRAZED PLATE HEAT EXCHANGERS



TECHNICAL DESCRIPTION

Cordivari SLB brazed plate heat exchangers represents the most compact and economic solution for many applications where it is necessary to exchange heat. The construction technology is based on the coupling of several stainless steel 316L plates. SLB plate heat exchangers are designed and manufactured for the production of domestic- and heating hot water, air-conditioning, refrigeration, evaporation and industrial processes.

MAIN ADVANTAGES:

- High Efficiency
- Long lifetime
- Savings
- High reliability
- Huge possibility to modify the relation between storage volume and Heat exchange

TECHNICAL CHARACTERISTIC:

Stainless steel AISI 316L brazed plate, braze-welded with 99,99% pure copper.

WORKING CONDITIONS		(*)Values intended as temperature limits for the seals. In any case, the minimum temperature must always be higher than the freezing temperature of both fluids and the temperature and pressure in the heat exchanger must always be lower than he operating limits indicated in Art. 4.3 of the PED directive 2014/68/EU (i.e. the maximum operating temperature must not exceed the lower temperature between the two circulating fluids, corresponding to the steam pressure of 0,5 bar above atmospheric pressure).
MAX PRESSURE	MAX TEMPERATURE	
10 bar	190 °C (*)	

PROMPT AVAILABILITY

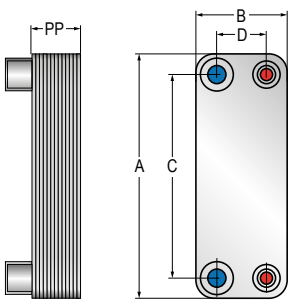

Connections 3/4" M		Maximum volumetric flow rate (recommended)
	[mm]	m^3/h
A	311	2,4
B	73	
C	278	
D	40	



Nr. Plates	**NOT INSULATED** VERSION	**INSULATED** VERSION	PP	Weight
	Art. Nr.	Art. Nr.	[mm]	[Kg]
12	3175056658801	3175056658831	37	1,10
16	3175056658802	3175056658832	46	1,13
20	3175056658803	3175056658833	55	1,16
24	3175056658804	3175056658834	64	1,19
30	3175056658805	3175056658835	78	1,24
34	3175056658806	3175056658836	87	1,27
40	3175056658807	3175056658837	101	1,32

BRAZED PLATE HEAT EXCHANGERS **SLB 30**

BRAZED PLATE HEAT EXCHANGERS



TECHNICAL DESCRIPTION

Cordivari SLB brazed plate heat exchangers represents the most compact and economic solution for many applications where it is necessary to exchange heat. The construction technology is based on the coupling of several stainless steel 316L plates. SLB plate heat exchangers are designed and manufactured for the production of domestic- and heating hot water, air-conditioning, refrigeration, evaporation and industrial processes.

MAIN ADVANTAGES:

- High Efficiency
- Long lifetime
- Savings
- High reliability
- Huge possibility to modify the relation between storage volume and Heat exchange

TECHNICAL CHARACTERISTIC:

Stainless steel AISI 316L brazed plate, braze-welded with 99,99% pure copper.

WORKING CONDITIONS		(*)Values intended as temperature limits for the seals. In any case, the minimum temperature must always be higher than the freezing temperature of both fluids and the temperature and pressure in the heat exchanger must always be lower than he operating limits indicated in Art. 4.3 of the PED directive 2014/68/EU (i.e. the maximum operating temperature must not exceed the lower temperature between the two circulating fluids, corresponding to the steam pressure of 0,5 bar above atmospheric pressure).
MAX PRESSURE	MAX TEMPERATURE	
10 bar	190 °C (*)	

PROMPT AVAILABILITY

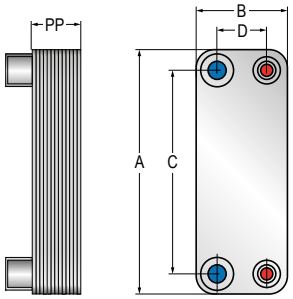

Connections 1" M		Maximum volumetric flow rate (recommended)
	[mm]	m^3/h
A	306	3,8
B	106	
C	250	
D	50	





Nr. Plates	**NOT INSULATED** VERSION	**INSULATED** VERSION	PP	Weight
	Art. Nr.	Art. Nr.	[mm]	[Kg]
14	3175056658812	3175056658842	43	2,98
20	3175056658813	3175056658843	57	3,70
30	3175056658814	3175056658844	81	4,90
40	3175056658815	3175056658845	104	6,10
50	3175056658816	3175056658846	128	7,30

BRAZED PLATE HEAT EXCHANGERS **SLB 40**

BRAZED PLATE HEAT EXCHANGERS



TECHNICAL DESCRIPTION

Cordivari SLB brazed plate heat exchangers represents the most compact and economic solution for many applications where it is necessary to exchange heat. The construction technology is based on the coupling of several stainless steel 316L plates. SLB plate heat exchangers are designed and manufactured for the production of domestic- and heating hot water, air-conditioning, refrigeration, evaporation and industrial processes.

MAIN ADVANTAGES:

- High Efficiency
- Long lifetime
- Savings
- High reliability
- Huge possibility to modify the relation between storage volume and Heat exchange

TECHNICAL CHARACTERISTIC:

Stainless steel AISI 316L brazed plate, braze-welded with 99,99% pure copper.

WORKING CONDITIONS		(*)Values intended as temperature limits for the seals. In any case, the minimum temperature must always be higher than the freezing temperature of both fluids and the temperature and pressure in the heat exchanger must always be lower than he operating limits indicated in Art. 4.3 of the PED directive 2014/68/EU (i.e. the maximum operating temperature must not exceed the lower temperature between the two circulating fluids, corresponding to the steam pressure of 0,5 bar above atmospheric pressure).
MAX PRESSURE	MAX TEMPERATURE	
10 bar	190 °C (*)	

PROMPT AVAILABILITY

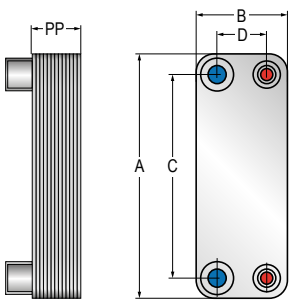

Connections 1" M		Maximum volumetric flow rate (recommended)
	[mm]	m^3/h
A	522	3,8
B	106	
C	466	
D	50	





Nr. Plates	**NOT INSULATED** VERSION	**INSULATED** VERSION	PP	Weight
	Art. Nr.	Art. Nr.	[mm]	[Kg]
30	3175056658817	3175056658847	81	8,3
40	3175056658818	3175056658848	104	10,2
50	3175056658819	3175056658849	128	12,1
60	3175056658820	3175056658850	151	14

BRAZED PLATE HEAT EXCHANGERS **SLB 90**

BRAZED PLATE HEAT EXCHANGERS



TECHNICAL DESCRIPTION

Cordivari SLB brazed plate heat exchangers represents the most compact and economic solution for many applications where it is necessary to exchange heat. The construction technology is based on the coupling of several stainless steel 316L plates. SLB plate heat exchangers are designed and manufactured for the production of domestic- and heating hot water, air-conditioning, refrigeration, evaporation and industrial processes.

MAIN ADVANTAGES:

- High Efficiency
- Long lifetime
- Savings
- High reliability
- Huge possibility to modify the relation between storage volume and Heat exchange

TECHNICAL CHARACTERISTIC:

Stainless steel AISI 316L brazed plate, braze-welded with 99,99% pure copper.

WORKING CONDITIONS		(*)Values intended as temperature limits for the seals. In any case, the minimum temperature must always be higher than the freezing temperature of both fluids and the temperature and pressure in the heat exchanger must always be lower than he operating limits indicated in Art. 4.3 of the PED directive 2014/68/EU (i.e. the maximum operating temperature must not exceed the lower temperature between the two circulating fluids, corresponding to the steam pressure of 0,5 bar above atmospheric pressure).
MAX PRESSURE	MAX TEMPERATURE	
10 bar	190 °C (*)	

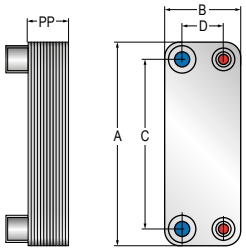

PLATES "H"

Connections 2" M		Maximum volumetric flow rate (recommended)
	[mm]	m³/h
A	606	18
B	181	
C	519	
D	92	

PLATES "L"

Connections 2" M		Maximum volumetric flow rate (recommended)
	[mm]	m³/h
A	616	18
B	188	
C	519	
D	92	





PLATES **"H"**

Nr. Plates	**NOT INSULATED** VERSION	**INSULATED** VERSION	PP	Weight
	Art. Nr.	Art. Nr.	[mm]	[Kg]
30	3175056658821	3175056658851	97	19,3
40	3175056658822	3175056658852	125	23,5
50	3175056658823	3175056658853	153	27,6
60	3175056658824	3175056658854	181	31,8
70	3175056658825	3175056658855	209	35,9

PLATES "**L**"

Nr. Plates	**NOT INSULATED** VERSION	**INSULATED** VERSION	PP	Weight
	Art. Nr.	Art. Nr.	[mm]	[Kg]
30	3175056658826	3175056658856	97	19,3
40	3175056658827	3175056658857	125	23,5
50	3175056658828	3175056658858	153	27,6
60	3175056658829	3175056658859	181	31,8
70	3175056658830	3175056658860	209	35,9

For more operating conditions, please consult our online tool at www.cordivari.it.

EXAMPLE OF INSTALLATION WITH **PHC EXCHANGERS** AND SOLAR THERMAL SYSTEM FOR SWIMMING POOL HEATING

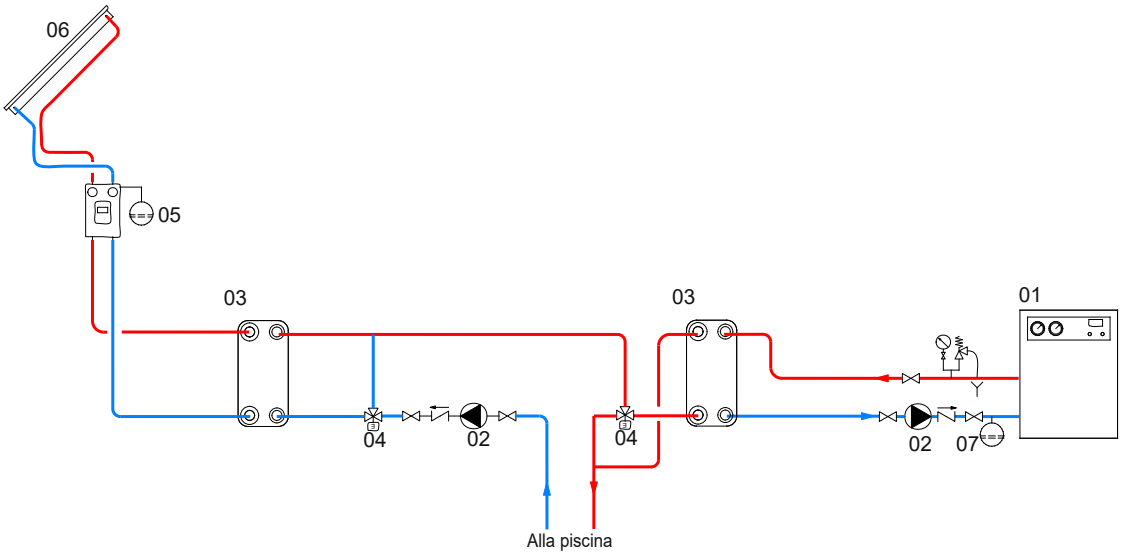

01	Generator	03	SLB exchanger	05	D.H.W. recirculation group	07	Expansion vessel
02	Heating system circulation group	04	Motorized 3-way valve	06	Solar panels		

QUICK-CHOICE CHARTS - BRAZED PLATE EXCHANGERS **SLB**

INSTANTANEOUS DHW PRODUCTION WITH CONDENSING BOILER

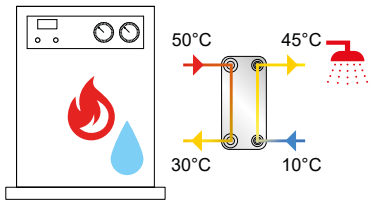

Performance data are obtained with fouling resistance of 0.00003m²K/W and 0.00007m²K/W (primary and secondary circuits). Visit our website **www.cordivari.com/configurator_plate_exchangers** to get your tailored product

	Primary		Secondary			
	Inlet	Outlet	Inlet	Outlet		
	50°C	30°C	10°C	45°C		
kW	m³/h	kPa	l/min	kPa	Model	Nr. of plates
20	0,87	3	8,19	1	**SLB30**	40
25	1,09	3	10,24	1	**SLB30**	50
30	1,31	20	12,29	8	**SLB40**	30
35	1,52	26	14,34	11	**SLB40**	30
40	1,74	20	16,39	8	**SLB40**	40
50	2,18	30	20,48	12	**SLB40**	40
60	2,61	28	24,58	11	**SLB40**	50
75	3,26	31	30,73	12	**SLB40**	60
100	4,3	16	41,16	7	**SLB90 H**	30
125	5,4	15	51,45	6	**SLB90 H**	40
150	6,5	14	61,73	6	**SLB90 H**	50
200	8,7	18	82,31	7	**SLB90 H**	60
250	10,9	21	102,89	8	**SLB90 H**	70
200	8,7	6	82,31	2	**SLB90 L**	60
250	10,9	7	102,89	3	**SLB90 L**	70

INSTANTANEOUS DHW PRODUCTION WITH BIOMASS (OR TRADITIONAL) BOILER

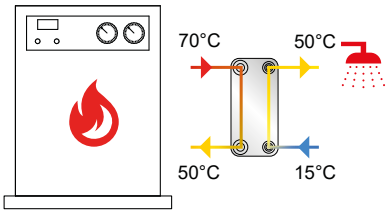

Performance data are obtained with fouling resistance of 0.00003m²K/W and 0.00007m²K/W (primary and secondary circuits). Visit our website **www.cordivari.com/configurator_plate_exchangers** to get your tailored product

	Primary		Secondary			
	Inlet	Outlet	Inlet	Outlet		
	70°C	50°C	15°C	50°C		
kW	m³/h	kPa	l/min	kPa	Model	Nr. of plates
12	0,53	5	4,92	2	**SLB15**	20
16	0,7	4	6,56	2	**SLB15**	30
20	0,88	6	8,2	3	**SLB15**	30
25	1,1	31	10,25	16	**SLB30**	14
30	1,32	52	12,3	24	**SLB20**	20
35	1,54	30	14,35	14	**SLB30**	20
40	1,76	38	16,4	18	**SLB30**	20
50	2,2	28	20,5	12	**SLB30**	30
60	2,64	39	24,59	17	**SLB30**	30
75	3,3	36	30,74	15	**SLB30**	40
95	4,1	43	39,1	17	**SLB40**	60
110	4,8	19	45,27	8	**SLB90 H**	30
135	5,9	17	55,56	7	**SLB90 H**	40
270	11,7	24	111,12	9	**SLB90 H**	70
135	5,9	5	55,56	2	**SLB90 L**	40
270	11,7	3	111,12	3	**SLB90 L**	70

HOT WATER TANK WARM-UP WITH BIOMASS (OR TRADITIONAL) BOILER

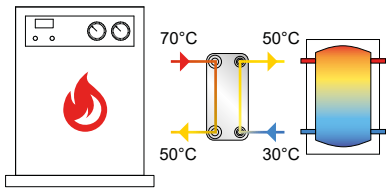

Performance data are obtained with fouling resistance of 0.00003m²K/W and 0.00007m²K/W (primary and secondary circuits). Visit our website **www.cordivari.com/configurator_plate_exchangers** to get your tailored product

	Primary		Secondary			
	Inlet	Outlet	Inlet	Outlet		
	70°C	50°C	30°C	50°C		
kW	m³/h	kPa	l/min	kPa	Model	Nr. of plates
8	0,35	3	0,35	2	**SLB15**	20
12	0,53	3	0,52	2	**SLB15**	30
16	0,7	31	0,69	26	**SLB20**	16
20	0,88	27	0,86	22	**SLB30**	14
25	1,1	45	1,08	39	**SLB20**	20
30	1,32	44	1,3	40	**SLB20**	24
35	1,54	38	1,51	36	**SLB20**	30
40	1,76	49	1,73	45	**SLB30**	30
50	2,2	43	2,16	42	**SLB20**	40
60	2,64	26	2,59	25	**SLB30**	40
70	3,08	35	3,02	33	**SLB30**	50
90	3,9	39	3,9	39	**SLB40**	60
150	6,6	37	6,5	34	**SLB90 H**	30
200	8,7	36	8,7	35	**SLB90 H**	40
300	13,1	28,77	13	28,8	**SLB90 H**	70
200	8,7	10,58	8,7	10,16	**SLB90 L**	40
300	13,1	10,09	13	10,03	**SLB90 L**	70

QUICK-CHOICE CHARTS - BRAZED PLATE EXCHANGERS **SLB**

HOT WATER TANK WARM-UP WITH BIOMASS (OR TRADITIONAL) BOILER

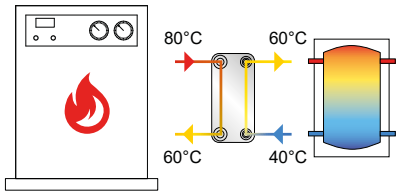

Performance data are obtained with fouling resistance of 0.00003m²K/W and 0.00007m²K/W (primary and secondary circuits). Visit our website **www.cordivari.com/configurator_plate_exchangers** to get your tailored product

	Primary		Secondary			
	Inlet	Outlet	Inlet	Outlet		
	80°C	60°C	40°C	60°C		
kW	m³/h	kPa	l/min	kPa	Model	Nr. of plates
8	0,35	3	0,35	2	**SLB15**	20
12	0,53	3	0,52	2	**SLB15**	30
16	0,71	31	0,69	25	**SLB20**	16
20	0,88	26	0,87	21	**SLB30**	14
25	1,11	44	1,08	38	**SLB20**	20
30	1,33	43	1,3	39	**SLB20**	24
35	1,55	37	1,52	35	**SLB20**	30
40	1,77	21	1,73	19	**SLB30**	30
50	2,21	42	2,17	41	**SLB20**	40
60	2,65	26	2,6	24	**SLB30**	40
70	3,1	23	3,03	22	**SLB30**	50
90	4	39	3,9	38	**SLB40**	60
150	6,6	36	6,5	33	**SLB90 H**	30
200	8,8	36	8,7	34	**SLB90 H**	40
300	13,2	28	13,1	28	**SLB90 H**	70
200	8,8	10	8,7	10	**SLB90 L**	40
300	13,2	10	13,1	10	**SLB90 L**	70

HOT WATER TANK WARM-UP WITH SOLAR THERMAL PANELS

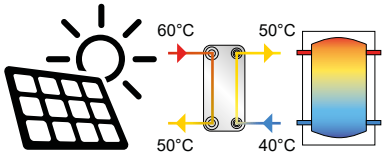

Performance data are obtained with fouling resistance of 0.00003m²K/W and 0.00007m²K/W (primary and secondary circuits). Visit our website **www.cordivari.com/configurator_plate_exchangers** to get your tailored product

	Primary		Secondary			
	Inlet	Outlet	Inlet	Outlet		
	60°C	50°C	40°C	50°C		
kW	m³/h	kPa	l/min	kPa	Model	Nr. of plates
5	0,44	4	0,43	4	**SLB15**	20
10	0,87	48	0,87	38	**SLB30**	14
15	1,31	44	1,3	39	**SLB20**	24
20	1,75	21	1,73	19	**SLB30**	30
25	2,19	44	2,17	41	**SLB20**	40
30	2,62	26	2,6	25	**SLB30**	40
45	3,9	40	3,9	39	**SLB40**	60
70	6,1	33	6,1	30	**SLB90 H**	30
100	8,7	37	8,7	34	**SLB90 H**	40
160	14	33	13,9	32	**SLB90 H**	70
100	8,7	11	8,7	10	**SLB90 L**	40
160	14	11	13,9	11	**SLB90 L**	70

DOMESTIC HEATING WITH HIGH TEMPERATURE TERMINALS AND BIOMASS (OR TRADITIONAL) BOILER

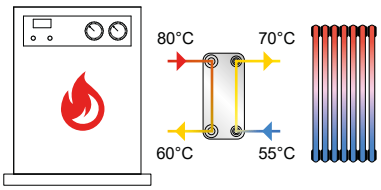

Performance data are obtained with fouling resistance of 0.00003m²K/W and 0.00003m²K/W (primary and secondary circuits). Visit our website **www.cordivari.com/configurator_plate_exchangers** to get your tailored product

	Primary		Secondary			
	Inlet	Outlet	Inlet	Outlet		
	80°C	60°C	55°C	70°C		
kW	m³/h	kPa	l/min	kPa	Model	Nr. of plates
10	0,44	6	0,58	9	**SLB20**	24
15	0,66	8	0,87	12	**SLB20**	30
20	0,88	8	1,16	12	**SLB20**	40
25	1,11	5	1,45	8	**SLB30**	40
30	1,33	5	1,75	8	**SLB30**	50
35	1,55	27	2,04	41	**SLB40**	30
40	1,77	20	2,33	32	**SLB40**	40
50	2,21	30	2,91	48	**SLB40**	40
60	2,65	28	3,49	45	**SLB40**	50
80	3,5	11	4,7	17	**SLB90 H**	30
100	4,4	10	5,8	16	**SLB90 H**	40
120	5,3	5	7	9	**SLB90 H**	70
100	4,4	3	5,8	5	**SLB90 L**	40
120	5,3	2	7	3	**SLB90 L**	70

QUICK-CHOICE CHARTS - BRAZED PLATE EXCHANGERS **SLB**

DOMESTIC HEATING WITH HIGH TEMPERATURE TERMINALS AND BIOMASS (OR TRADITIONAL) BOILER

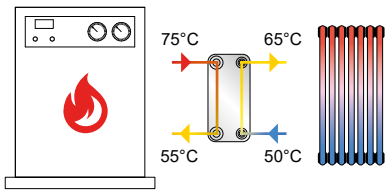

Performance data are obtained with fouling resistance of 0.00003m²K/W and 0.00003m²K/W (primary and secondary circuits). Visit our website **www.cordivari.com/configurator_plate_exchangers** to get your tailored product

	Primary		Secondary			
	Inlet	Outlet	Inlet	Outlet		
	75°C	55°C	50°C	65°C		
kW	m³/h	kPa	l/min	kPa	Model	Nr. of plates
10	0,44	6	0,58	9	**SLB20**	24
15	0,66	8	0,87	12	**SLB20**	30
20	0,88	8	1,16	12	**SLB20**	40
25	1,11	5	1,45	8	**SLB30**	40
30	1,33	5	1,75	8	**SLB30**	50
35	1,55	27	2,04	41	**SLB40**	30
40	1,77	20	2,33	32	**SLB40**	40
50	2,21	30	2,91	48	**SLB40**	40
60	2,65	28	3,49	45	**SLB40**	50
80	3,5	12	4,7	18	**SLB90 H**	30
100	4,4	10	5,8	16	**SLB90 H**	40
120	5,3	5	7	9	**SLB90 H**	70
100	4,4	3	5,8	5	**SLB90 L**	40
120	5,3	2	7	3	**SLB90 L**	70

DOMESTIC HEATING WITH MEDIUM TEMPERATURE TERMINALS AND CONDENSING BOILER

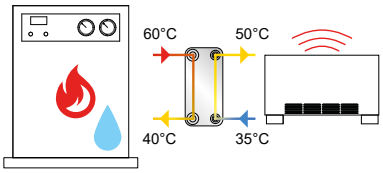

Performance data are obtained with fouling resistance of 0.00003m²K/W and 0.00003m²K/W (primary and secondary circuits). Visit our website **www.cordivari.com/configurator_plate_exchangers** to get your tailored product

	Primary		Secondary			
	Inlet	Outlet	Inlet	Outlet		
	60°C	40°C	35°C	50°C		
kW	m³/h	kPa	l/min	kPa	Model	Nr. of plates
20	0,87	4	1,15	6	**SLB30**	40
25	1,09	4	1,44	6	**SLB30**	50
30	1,31	22	1,73	33	**SLB40**	30
35	1,53	28	2,02	44	**SLB40**	30
40	1,75	21	2,31	33	**SLB40**	40
50	2,19	21	2,88	34	**SLB40**	50
60	2,62	21	3,46	35	**SLB40**	60
75	3,3	11	4,3	16	**SLB90 H**	30
95	4,1	10	5,5	15	**SLB90 H**	40
115	5	5	6,7	8	**SLB90 H**	70
95	4,1	3	5,5	4	**SLB90 L**	40
115	5	2	6,7	3	**SLB90 L**	70

DOMESTIC HEATING WITH LOW TEMPERATURE TERMINALS AND CONDENSING BOILER

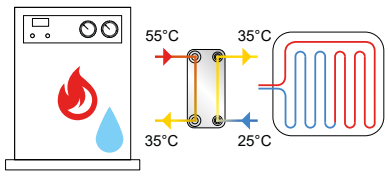

Performance data are obtained with fouling resistance of 0.00003m²K/W and 0.00003m²K/W (primary and secondary circuits). Visit our website **www.cordivari.com/configurator_plate_exchangers** to get your tailored product

	Primary		Secondary			
	Inlet	Outlet	Inlet	Outlet		
	55°C	35°C	25°C	35°C		
kW	m³/h	kPa	l/min	kPa	Model	Nr. of plates
20	0,87	14	1,73	42	**SLB30**	20
25	1,09	20	2,16	63	**SLB30**	20
30	1,31	13	2,59	43	**SLB30**	30
35	1,53	17	3,02	56	**SLB30**	30
40	1,75	13	3,45	44	**SLB30**	40
50	2,18	19	4,31	66	**SLB30**	40
60	2,6	5	5,2	68	**SLB40**	60
75	3,3	11	6,5	35	**SLB90 H**	30
95	4,1	10	8,2	33	**SLB90 H**	40
115	5	5	9,9	18	**SLB90 H**	70
95	4,1	3	8,2	9	**SLB90 L**	40
115	5	2	9,9	6	**SLB90 L**	70

QUICK-CHOICE CHARTS - BRAZED PLATE EXCHANGERS **SLB**

DOMESTIC HEATING WITH MEDIUM TEMPERATURE TERMINALS AND HEAT PUMP

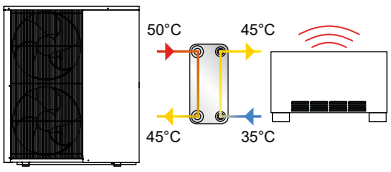

Performance data are obtained with fouling resistance of 0.00003m²K/W and 0.00003m²K/W (primary and secondary circuits). Visit our website **www.cordivari.com/configurator_plate_exchangers** to get your tailored product

	Primary		Secondary			
	Inlet	Outlet	Inlet	Outlet		
	50°C	45°C	35°C	45°C		
kW	m³/h	kPa	l/min	kPa	Model	Nr. of plates
5	0,87	6	0,43	2	**SLB15**	30
7	1,22	11	0,61	4	**SLB15**	30
11	1,92	44	0,95	16	**SLB30**	20
16	2,79	45	1,38	15	**SLB30**	30
20	3,48	42	1,73	13	**SLB30**	40
35	6,1	87	3	26	**SLB40**	60
50	8,7	57	4,3	19	**SLB90 H**	30
75	13,1	72	6,5	23	**SLB90 H**	40
110	19,2	57	9,5	17	**SLB90 H**	70
75	13,1	21	6,5	6	**SLB90 L**	40
110	19,2	21	9,5	6	**SLB90 L**	70

DOMESTIC HEATING WITH LOW TEMPERATURE TERMINALS AND HEAT PUMP

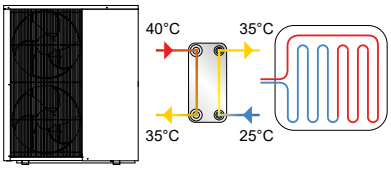

Performance data are obtained with fouling resistance of 0.00003m²K/W and 0.00003m²K/W (primary and secondary circuits). Visit our website **www.cordivari.com/configurator_plate_exchangers** to get your tailored product

	Primary		Secondary			
	Inlet	Outlet	Inlet	Outlet		
	40°C	35°C	25°C	35°C		
kW	m³/h	kPa	l/min	kPa	Model	Nr. of plates
5	0,87	6	0,43	2	**SLB15**	30
7	1,22	12	0,61	4	**SLB15**	30
11	1,92	48	0,95	17	**SLB30**	20
16	2,79	47	1,38	15	**SLB30**	30
20	3,48	43	1,73	13	**SLB30**	40
35	6,1	89	3	27	**SLB40**	60
50	8,7	58	4,3	19	**SLB90 H**	30
75	13	74	6,5	23	**SLB90 H**	40
110	19,1	59	9,5	18	**SLB90 H**	70
75	13	22	6,5	7	**SLB90 L**	40
110	19,1	21	9,5	6	**SLB90 L**	70

DOMESTIC COOLING WITH FANCOIL TERMINALS AND HEAT PUMP

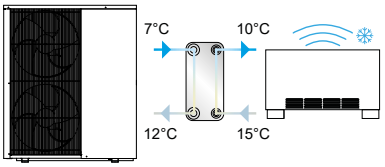

Performance data are obtained with fouling resistance of 0.00003m²K/W and 0.00003m²K/W (primary and secondary circuits). Visit our website **www.cordivari.com/configurator_plate_exchangers** to get your tailored product

	Primary		Secondary			
	Inlet	Outlet	Inlet	Outlet		
	7°C	12°C	15°C	10°C		
kW	m³/h	kPa	l/min	kPa	Model	Nr. of plates
5	0,86	16	0,86	14	**SLB15**	30
7	1,2	18	1,21	16	**SLB15**	30
11	1,89	12	1,89	11	**SLB30**	20
16	2,75	38	2,75	35	**SLB30**	30
20	3,44	41	3,44	39	**SLB30**	40
30	5,1	78	5,2	73	**SLB40**	60
40	6,9	49	6,9	43	**SLB90 H**	30
50	8,6	43	8,6	39	**SLB90 H**	40
80	13,7	38	13,7	35	**SLB90 H**	70
50	8,6	12	8,6	11	**SLB90 L**	40
80	13,7	12	13,7	12	**SLB90 L**	70

DOMESTIC HOT WATER PRODUCTION AND STORAGE WITH HEAT PUMP SYSTEM

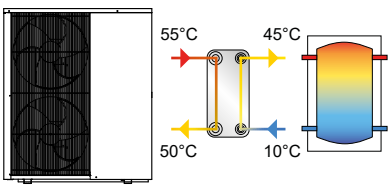

Performance data are obtained with fouling resistance of 0.00003m²K/W and 0.00003m²K/W (primary and secondary circuits). Visit our website **www.cordivari.com/configurator_plate_exchangers** to get your tailored product

	Primary		Secondary			
	Inlet	Outlet	Inlet	Outlet		
	55°C	50°C	10°C	45°C		
kW	m³/h	kPa	l/min	kPa	Model	Nr. of plates
10	1,7	22	0,2	0,74	**SLB15**	30
15	2,6	46	0,3	1,55	**SLB15**	30
17	2,9	102	0,4	3,86	**SLB30**	20
20	3,4	67	0,4	2,35	**SLB30**	30
25	4,3	62	0,6	2	**SLB30**	40
30	5,2	72	0,7	2	**SLB40**	60
50	8,7	56	1,2	2	**SLB90 H**	30
80	14	80	2	3	**SLB90 H**	40
120	20,9	66	3	2	**SLB90 H**	70
80	14	23,81	2	0,73	**SLB90 L**	40
120	20,9	24,04	3	0,65	**SLB90 L**	70

PLATE EXCHANGERS TOOL

Cordivari online plate heat exchanger dimensioning tool

Dimensioning of brazed and inspectable heat exchangers **with one software**

Home screen



In the screen check, the user can make adjustments (e.g. varying the number of plates) and check the impact on the results.

Selection and check screen

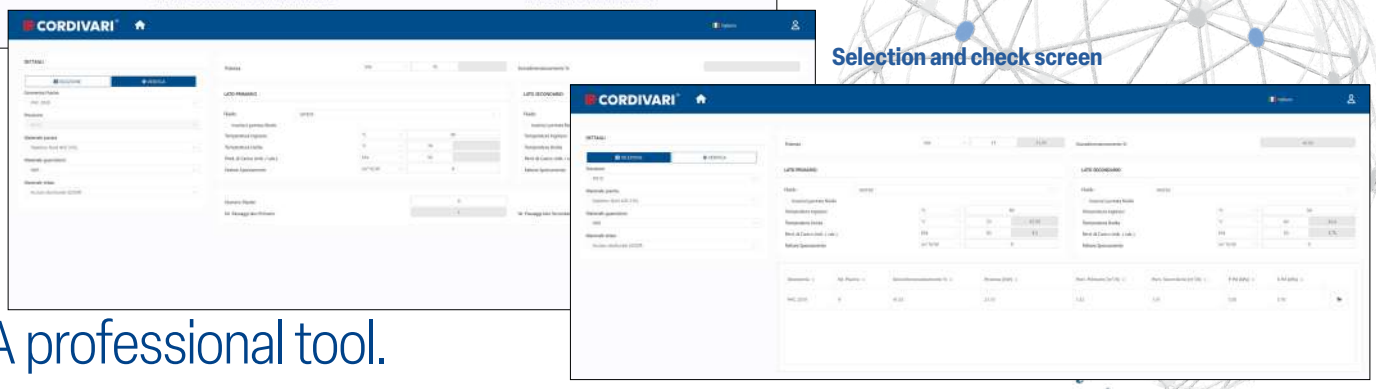

A professional tool.



Available online a report of the dimensioning, complete with technical data and drawings.

In just a few clicks you get your customised dimensioning, free of charge, wherever you are. You can download your report immediately, or save it and retrieving it any time from your private area. The software designed for professionals in the sector, versatile, intuitive and always accessible to everyone.





Through our website you can get all specifications to guide you in the best way to the purchase of Cordivari ProductsYour optimal configuration.

YOUR IDEAL CONFIGURATION

tool online su **www.cordivari.it**

PIASTRATERM® MODULE



WALL-MOUNTED INSTALLATION



MOUNTING ON CORDIVARI DHW CYLINDERS AND STORAGE TANKS

NEW RANGE OF PIASTRATERM® MODULES FOR HIGH- AND LOW-TEMPERATURE GENERATORS AND HEAT PUMPS

The new Cordivari Piastraterm® modules are plate heat exchanger systems for the production of domestic hot water (DHW), to be combined with a storage tank. Efficient both in heat transfer and storage, Piastraterm® ensures rapid availability of DHW and offers high versatility, as it can be connected to high- or low-temperature generators while always maintaining correct heat exchange.

OPTIMIZED HEAT EXCHANGE

Piastraterm® allows DHW to be ready for use in a short time. Thanks to its flexibility of use, it can be combined with high- or low-temperature generators, ensuring proper heat transfer in all operating conditions.

COMPATIBILITY WITH CORDIVARI SYSTEMS

The modules are compatible with Cordivari DHW storage tanks. The available combinations are designed to effectively meet different DHW production requirements, while at the same time ensuring simple and immediate installation.

SLB EXHANGERS

BRAZED PLATE HEAT EXCHANGERS



SLB 15 SLB 20 SLB 30 SLB 40 SLB 90

Cordivari plate heat exchangers offer a complete range of solutions for domestic, residential and industrial applications. It is a wide and flexible product offering, from small-sized brazed plate heat exchangers to large, gasketed plate heat exchangers with high heat transfer capacity. The complete range of heat exchangers is available in the Cordivari storage tank catalogue. Thanks to top-quality materials, and the possibility of selecting the type of gaskets and the maximum operating pressure, the new Cordivari SLB range makes it possible to meet any plant requirement and any application in the plumbing and heating sector.

From small single-family systems to large users, every installation can now find the most suitable Cordivari solution.

MODEL	SLB 15				SLB 20							SLB 30					SLB 40				SLB 90				
NR. OF PLATES	10	20	30	40	12	16	20	24	30	34	40	14	20	30	40	50	30	40	50	60	30	40	50	60	70
CONNECTIONS	3/4" M				3/4" M							1" M					1" M				2" M				
MAXIMUM VOLUMETRIC FLOW RATE (RECOMMENDED) [m³/h]	2,4				2,4							3,8					3,8				18				
WEIGHT [Kg]	0,62	1,02	1,42	1,82	1,10	1,13	1,16	1,19	1,24	1,27	1,32	2,98	3,70	4,90	6,10	7,30	8,3	10,2	12,1	14	19,3	23,5	27,6	31,8	35,9

MATCHING **PIASTRATERM®** MODULES WITH STORAGE TANKS

PIASTRATERM® MODULE SELECTION GUIDE

			SLB 30					SLB 40	SLB 90		
											
			Nr.of PLATES								
STORAGE MODEL	MODEL		14	20	30	40	50	60	30	50	70
VASO INERZIALE	200										
	300										
	500										
	800										
	1000										
	1500										
	2000										
	2500										
	3000										
	4000										
	5000										
VASO STORAGE 1	200										
	300										
	500										
	800										
	1000										
	1500										
	2000										
	2500										
	3000										
	4000										
	5000										
EXTRA 1	200										
	300										
	500										
	800										
	1000										
	1500										
	2000										
	2500										
	3000										
	4000										
	5000										
HIGH TEMPERATURE	BOILER 80°C	Output [kW]	38	72	120	150	200	225	250	280	300
		DHW [l/h]	887	1680	2801	3501	4668	5252	5835	6535	7002
	BOILER 65°C	Output [kW]	21	42	74	95	129	140	160	180	200
		DHW [l/h]	483	972	1722	2228	3019	3268	3734	4201	4668
LOW TEMP.	HEAT PUMP 55°C	Output [kW]	12	18	22	32	35	40	100	140	170
		DHW [l/h]	280	420	513	747	817	934	2334	3268	3968

FINISHES/INSULATION							
WB	WC	XB	XC	WXB	WXC	XXB	XXC

PIASTRATERM® MODULE PERFORMANCE DATA TABLE

HEATING TIMES WITH 80°C BOILER AND DHW 10–45°C





			SLB 30					SLB 40	SLB 90		
			Nr.of PLATES								
	MODEL		14	20	30	40	50	60	30	50	70
	200		00:18:00								
	300		00:27:00	00:11:00							
	500		00:45:00	00:19:00	00:11:00	00:09:00	00:07:00	00:06:00			
	800			00:30:00	00:18:00	00:14:00	00:11:00	00:09:00			
	1000				00:22:00	00:18:00	00:13:00	00:11:00			
	1500					00:27:00	00:20:00	00:18:00	00:16:00		
	2000						00:27:00	00:24:00	00:21:00	00:19:00	
	2500								00:27:00	00:24:00	
	3000								00:24:00	00:29:00	00:27:00
	4000									00:38:00	00:36:00
	5000										00:45:00
HIGH TEMP.	BOILER 80°C	Output [kW]	38	72	120	150	200	225	250	280	300
		DHW [l/h]	887	1680	2801	3501	4668	5252	5835	6535	7002
		Primary flow rate pressure drop [kPa]	56	94	119	112	135	198	32	13	37

HEATING TIMES WITH 65°C BOILER AND DHW 10–45°C

			SLB 30					SLB 40	SLB 90		
			Nr.of PLATES								
	MODEL		14	20	30	40	50	60	30	50	70
	200		00:26:00								
	300		00:38:00	00:19:00							
	500		01:04:00	00:32:00	00:18:00	00:14:00	00:10:00	00:09:00			
	800			00:51:00	00:29:00	00:23:00	00:17:00	00:15:00			
	1000				00:36:00	00:28:00	00:21:00	00:19:00			
	1500					00:42:00	00:31:00	00:29:00	00:25:00		
	2000						00:42:00	00:38:00	00:34:00	00:30:00	
	2500								00:42:00	00:37:00	
	3000								00:50:00	00:45:00	00:40:00
	4000									01:00:00	00:54:00
	5000										01:07:00
HIGH TEMP.	BOILER 65°C	Output [kW]	21	42	74	95	129	140	160	180	200
		DHW [l/h]	483	972	1722	2228	3019	3268	3734	4201	4668
		Primary flow rate pressure drop [kPa]	20	37	51	50	62	85	37	19	14

HEATING TIMES WITH 55°C HEAT PUMP (ΔT 5°C) AND DHW 10–45°C

			SLB 30					SLB 40	SLB 90		
			Nr.of PLATES								
	MODEL		14	20	30	40	50	60	30	50	70
	200		00:45:00								
	300		01:07:00	00:45:00							
	500		01:52:00	01:15:00	01:01:00	00:42:00	00:38:00	00:34:00			
	800			01:59:00	01:38:00	01:07:00	01:01:00	00:54:00			
	1000				02:02:00	01:24:00	01:17:00	01:07:00			
	1500					02:06:00	01:55:00	01:41:00	00:40:00		
	2000						02:34:00	02:14:00	00:54:00	00:38:00	
	2500								01:07:00	00:48:00	
	3000								01:21:00	00:58:00	00:47:00
	4000									01:17:00	01:03:00
	5000										01:19:00
LOW TEMP.	HEAT PUMP 55°C	Output [kW]	12	18	22	32	35	40	100	140	170
		DHW [l/h]	280	420	513	747	817	934	2334	3268	3968
		Primary flow rate pressure drop [kPa]	89	98	70	87	52	110	58	49	33

PIASTRATERM® MODULE PERFORMANCE DATA CHART

HEATING TIMES WITH 80°C BOILER AND DHW 10–45°C

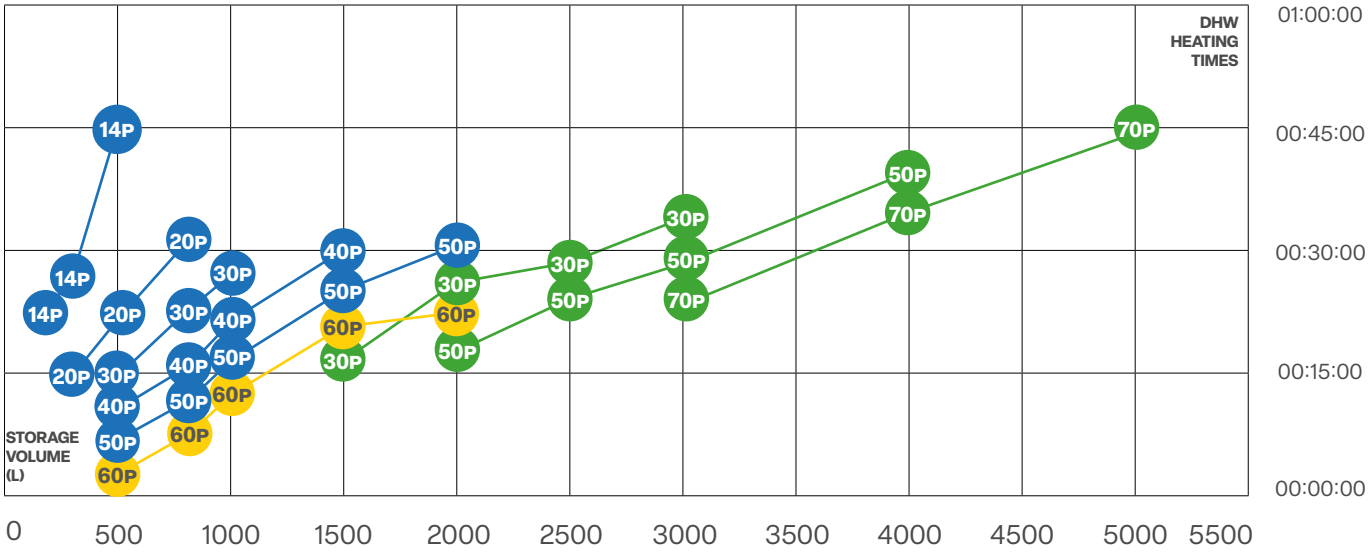

HEATING TIMES WITH 65°C BOILER AND DHW 10–45°C

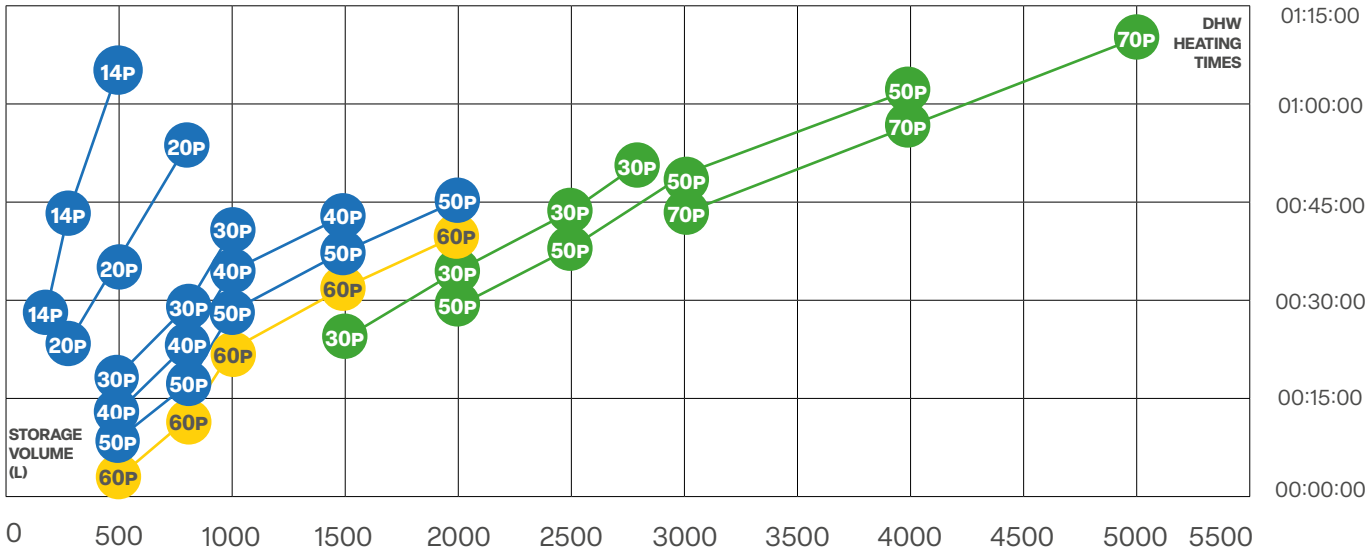

HEATING TIMES WITH 55°C HEAT PUMP (ΔT 5°C) AND DHW 10–45°C

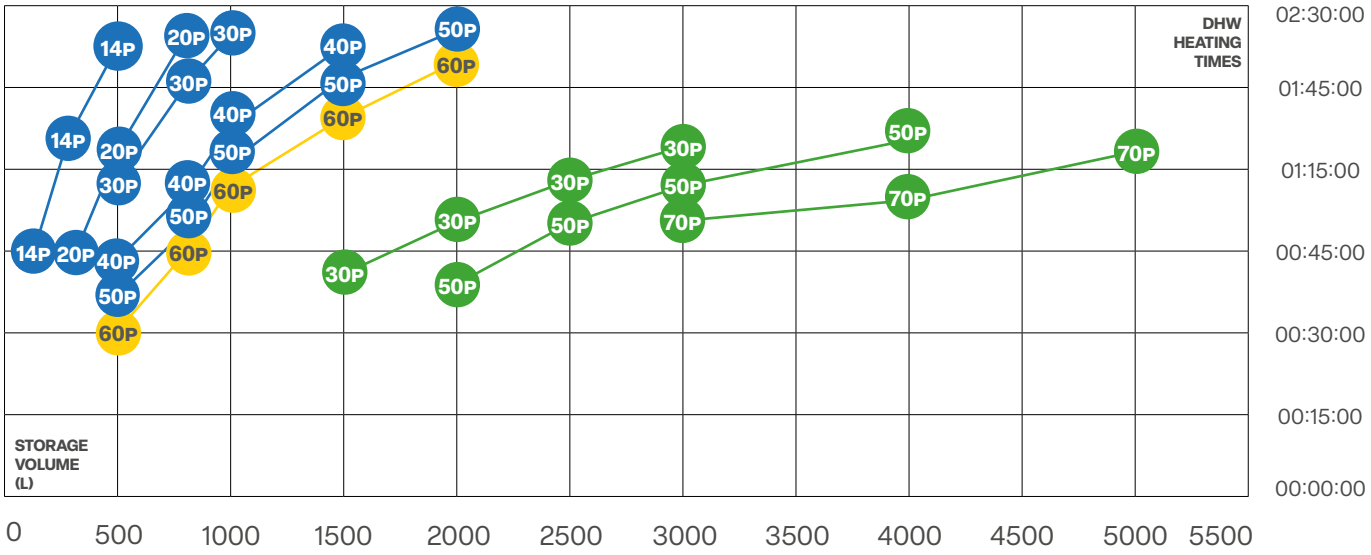

MODULE SLB 30 **MODULE SLB 40** **MODULE SLB 90**

For other conditions of use, the online tool is available on the Cordivari website at www.cordivari.it

PIASTRATERM® SLB MODULE

MODULE WITH AISI 316L STAINLESS STEEL SLB BRAZED PLATE HEAT EXCHANGER FOR HIGH- AND LOW-TEMPERATURE APPLICATIONS



HIGHER EFFICIENCY

FLEXIBILITY & COMPATIBILITY

STAINLESS STEEL CIRCULATOR

APPLICATION

Module for rapid DHW production, equipped with an insulated brazed plate heat exchanger in AISI 316L stainless steel and an integrated high-efficiency stainless steel circulator. The components include complete technical fittings for a quick and safe installation. It is the ideal system for applications in hotels and accommodation facilities, sports facilities, residential and centralised systems.

COMPONENTS

Protective casing
Insulated SLB heat exchanger
High-efficiency DHW circulator
Fittings with insulation and valves included
Reducers supplied:
SLB 30 and SLB 40: 1" 1/4 - 1" 1/2
SLB 90: 1" 1/4 - 1" 1/2 - 1"1/2-2"

TECHNICAL FEATURES

Casing in sheet metal with a special anti-corrosion treatment ensuring strength and long-term durability.
Easy to install, even in large systems.
Easy maintenance thanks to the removable casing.
On the primary side, 2" connections for the SLB 90 module, ensuring compatibility with generators with high flow rates.
High-efficiency integrated stainless steel circulator.

COMPATIBILITY

Once the output rating of the module to be installed has been defined, the module can be combined with a Cordivari storage tank by following the table of recommended accumulators for Piastraterm® modules available on previous pages.
Always check the connection table of DHW cylinders and storage tanks.

NEW

NEW ACCESSORIES FOR SLB 30 - SLB 40
PADDLE FLOW SWITCH

See Accessories section

PIASTRATERM® SLB 30

Nr. of plates	Heat transfer capacity [kW]			DHW [l/h]			
	Boiler 80°C	Boiler 65°C	Heat pump 55°C	Boiler 80°C	Boiler 65°C	Heat pump 55°C	Art. Nr.
14	30	21	12	887	483	280	3170316700001
20	72	42	18	1680	972	420	3170316700002
30	120	74	22	2801	1722	513	3170316700003
40	150	95	32	3501	2228	747	3170316700004
50	200	129	35	4668	3019	817	3170316700005
PIASTRATERM® SLB 40							
60	225	140	40	5252	3268	934	3170316700006
PIASTRATERM® SLB 90							
30 L	250	160	100	5835	3734	2334	3170316700007
50 L	280	180	140	6535	4201	3268	3170316700008
70 L	300	200	170	7002	4668	3968	3170316700009

EXAMPLE OF INSTALLATION WITH **MODULE PIASTRATERM®** AND **VASO INERZIALE**

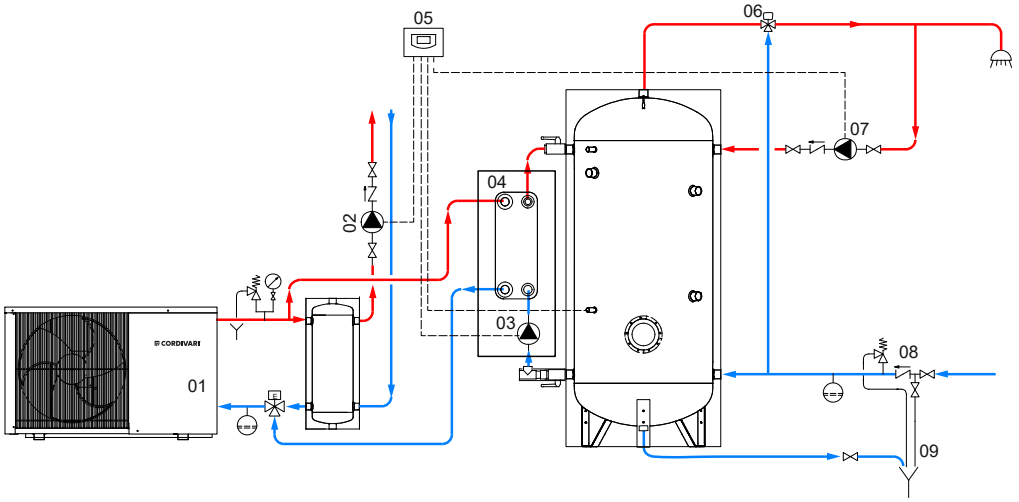

01	Generator PDC	04	PIASTRATERM® MODULE	07	D.H.W. recirculation group
02	Heating system circulation group	05	FULL CONTROL electronic unit/thermostat	08	Hydraulic safety group
03	D.H.W. circulation group	06	Thermostatic mixing valve	09	Blowdown valve

PIASTRATERM® SLB MODULE

MODULE WITH AISI 316L STAINLESS STEEL SLB BRAZED PLATE HEAT EXCHANGER
FOR HIGH- AND LOW-TEMPERATURE APPLICATIONS

HEAT EXCHANGER		D.H.W. HARDNESS
Pmax	Tmax	F max
10 bar	99 °C	30 °f

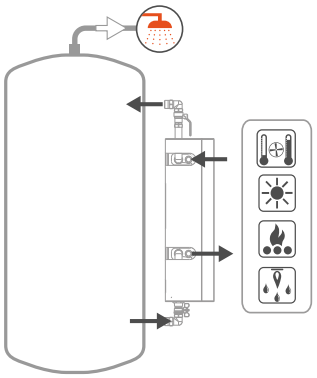

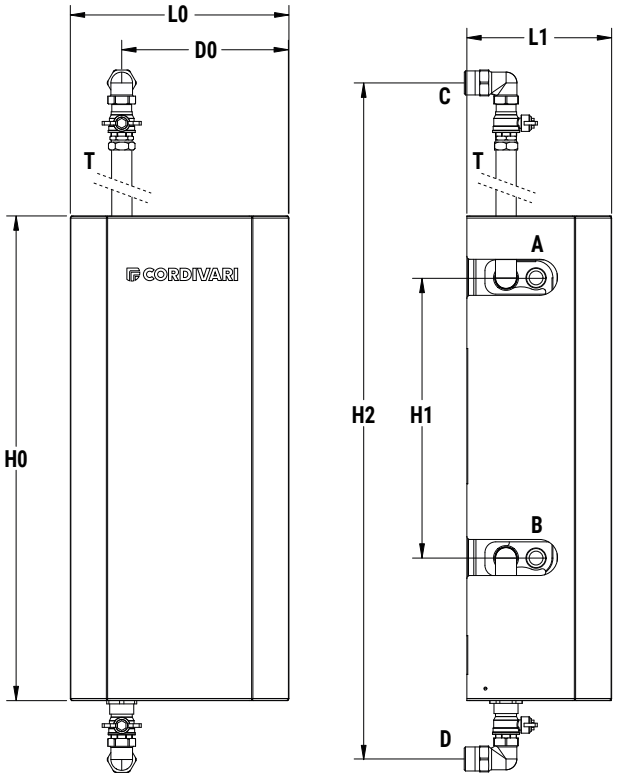

POSSIBILITY OF WALL-HUNG INSTALLATION

A	Primary circuit inlet
B	Primary circuit outlet
C	Domestic hot water circuit outlet
D	Domestic cold water circuit inlet
T	Insulated copper pipe

The SLB 30 and SLB 40 modules are supplied as standard with 1" 1/4 and 1" 1/2 reducers for connection to the DHW storage tank.
The SLB 90 module is supplied as standard with 1" 1/4, 1" 1/2 and 2" reducers for connection to the DHW storage tank.
Always check the connections of the DHW storage tank and, if necessary, use reducers different from the ones supplied.

Model SLB	H0	L0	D0	L1	H1	H2*	A-B	C-D	Reducers included	T
	[mm]					min ÷ max	Connections G M			Ø [mm]
SLB 30	560	364	278	241	250	860 ÷ 1600	1"	1"	1"1/4 - 1"1/2	28
SLB 40	806	364	278	241	466	1100 ÷ 1600	1"	1"	1"1/4 - 1"1/2	28
SLB 90	885	305	413	241	519	1600 ÷ 1850	2"	1"1/4	1"1/4 - 1"1/2, 1"1/2-2"	35

NOTE ON THE H2* VALUE- The data shown in the table refer to the tube supplied as standard. Where necessary, the installer may use a pipe of greater length.

PERFORMANCE CURVES OF THE CIRCULATORS INSTALLED IN THE PIASTRATERM® MODULES

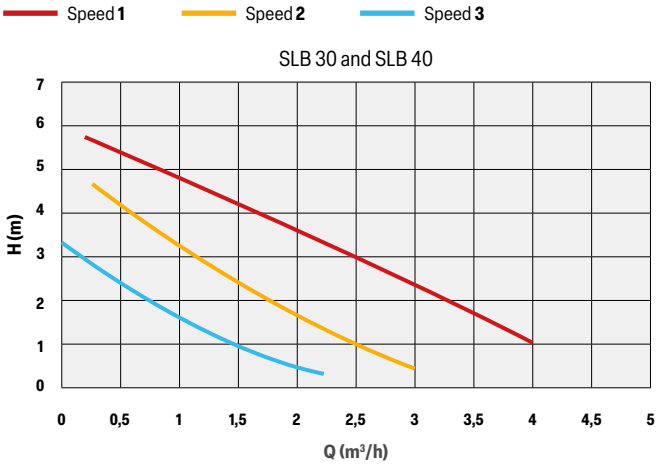

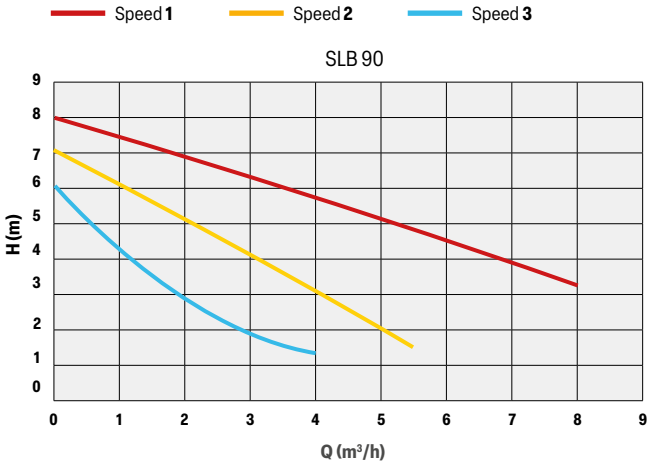

CORDIVARI

FRESH WATER MODULE **MACS®**

MODULE FOR IMMEDIATE D.H.W. PRODUCTION WITH ELECTRONIC CONTROL UNIT



APPLICATION
MACS® module produces instantly D.H.W. with high flow rate.
HEAT EXCHANGER, MATERIAL
Copper primary pipes, Stainless steel 316L DHW sanitary circuit; brass fittings and valves.
Stainless steel 316L brazed plate heat exchanger.
PPE module case housing and insulating the exchangers circuits.
TECHNICAL DESCRIPTION
MACS® module produces instantly D.H.W. with high flow rate without storage.
Thanks to a variable flow rate on the primary the risk of limescale formation on the sanitary side is highly reduced
The immediate and fast production of D.H.W. granted by the external plate exchanger system allows the following benefits:
- reduced dimensions of the tank for DHW productions

WARRANTY
2 years. See general sales conditions and warranty for electrical parts.



MACS® MODULE ELECTRONIC
STAINLESS STEEL 316L PLATE EXCHANGER

Model	Art. Nr.
70	3316006700007
120	3316006700008
180 HP	3316006700019

PROMPT AVAILABILITY

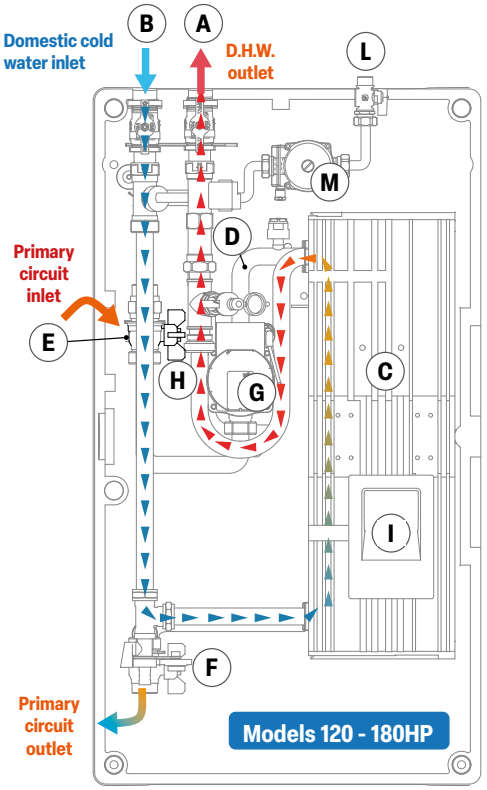

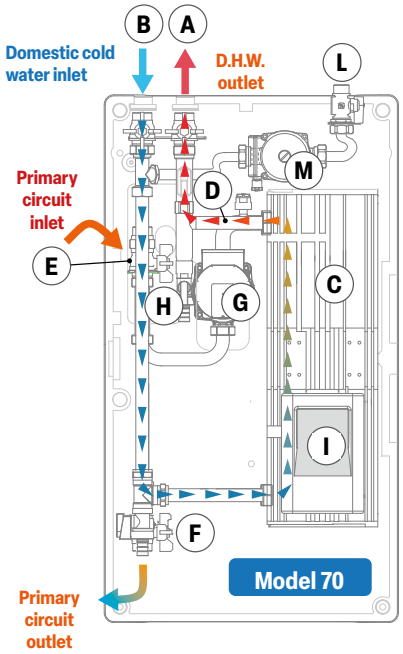

A	Domestic hot water outlet (DHW)
B	Domestic cold water circuit inlet
C	Stainless steel plate exchanger
D	Flow rate/ temperature probe
E	Primary circuit inlet
F	Primary circuit outlet
G	"Energy Saving" circulation group
H	Valves In/Out for DHW
I	Electronic control unit

DHW recirculation kit for MACS® module (optional)	
L	Connection for D.H.W. recirculation (optional)
M	D.H.W. recirculation pump (optional)

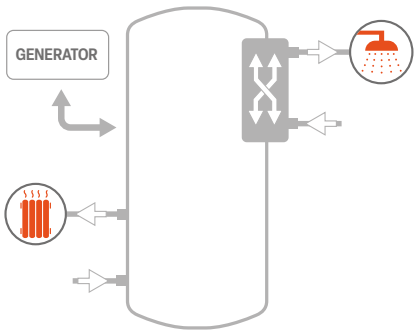

TECHNICAL DATA MACS® MODULE	MACS® 70	MACS® 120	MACS® 180 HP
D.H. W. Operation range	2-40 lt/min	5-100 lt/min	5-100 lt/min
DHW production (10-45°C) with accumulation at 80°C	40 lt/min	75 lt/min	86 lt/min
Maximum working temperature (PRIMARY CIRCUIT)	99°C	99°C	99C
Maximum working pressure (PRIMARY CIRCUIT)	8 bar	8 bar	8 bar
Maximum working temperature (DHW CIRCUIT)	90°C	90°C	90°C
Maximum working pressure (DHW CIRCUIT)	10 bar	10 bar	10 bar
Electric supply and characteristic	230 V AC, 43 W	230 V AC, 50 W	230 V AC, 75 W
Dimnension of the case (BxHxP) mm	L 500 x H 905 x P 310	L 500 x H 905 x P 310	L 500 x H 905 x P 310
Connections	3/4"F	1"M	1"M

ACCESSORIES

DHW recirculation group

Art. Nr.	
5221000000073	

The recirculation kit for Electronic MACS® module allows the implementation of a sanitary recirculation circuit on the system where modules are installed.
The main advantage of such sanitary recirculation circuit is to improve comfort and speed in achieving and enjoying the desired DHW temperature, reducing energy waste.
The control unit included as standard with the electronic MACS® modules allow the complete management of all settings of the recirculation circuit, such as temperature, setting etc.

ELECTRONIC MACS® TECHNICAL DATA CHART

The curves shown in these charts allow to obtain the DHW flow rate that can be produced by the individual MACS® module according to the storage / primary circuit temperature (value on the horizontal axis).
The curves are parameterized based on the desired DHW temperature and indicate the maximum DHW flow rate that can be produced at that temperature (with cold water inlet temperature at 10°C)
The MACS modules can produce all the DHW flow rates included in the area between the minimum activation flow rate and maximum flow curve of each temperature.

MACS® 180 HP

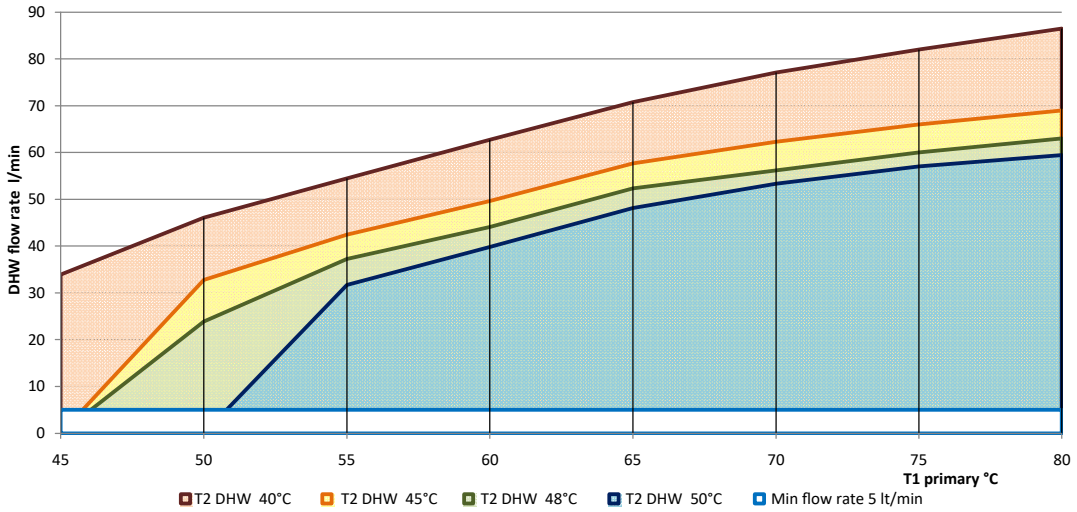

MACS® 120

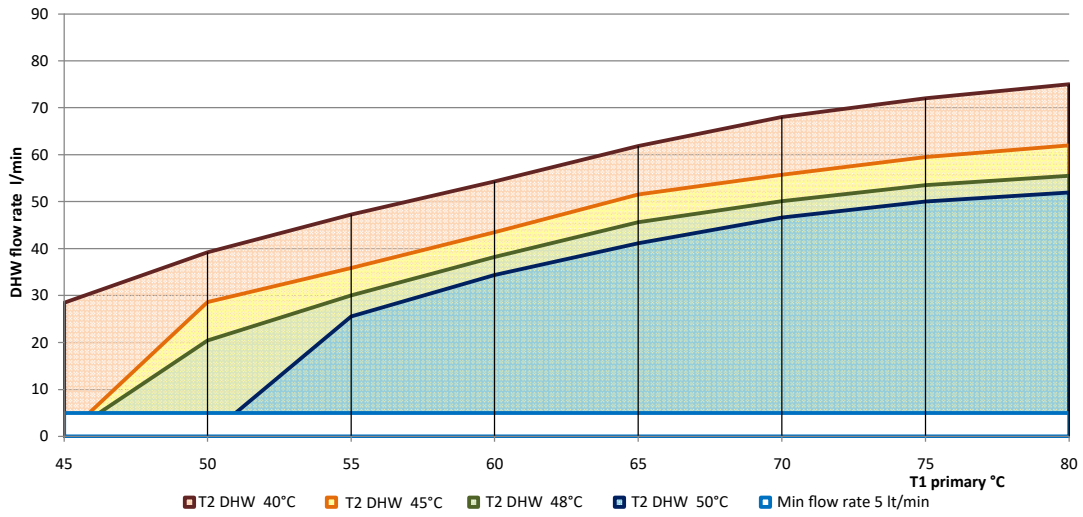

MACS® 70

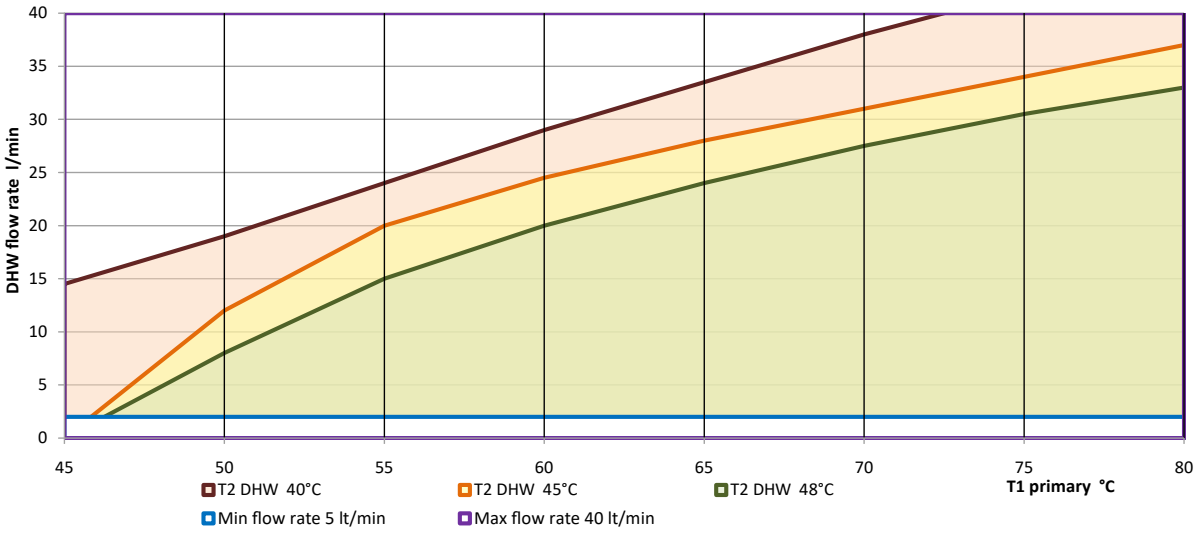

FRESH WATER MODULE **MACS® CASCADE SETUP**

CASCADE MACS® SYSTEM WITH ELECTRONIC CONTROL UNIT FOR IMMEDIATE DHW PRODUCTION ON LARGE INSTALLATIONS



APPLICATION
MACS® module produces instantly D.H.W. with high flow rate even if there is installed a limited power thermal generator.

EXCHANGER, MATERIAL
Copper primary pipes, Stainless steel 316L DHW sanitary circuit; brass fittings and valves.
Stainless steel 316L brazed plate heat exchanger.
PPE module case housing and insulating the exchangers circuits.

TECHNICAL DESCRIPTION
The management of additional MACS® modules in cascade allows to meet high DHW requirements.
The complete system manages trough the electronic control unit, the working of each module following the DHW request from the users.
The cascade configuration can eventually also manage the link of the DHW recirculation. The use of the MACS module in cascade takes all the benefits from the MACS module also in big installation where large DHW flows are needed to produce immediate DHW without the necessity to accumulate it.

WARRANTY
2 years
1 year electronical parts
See general sales conditions and warranty.

		Model	Art. Nr.
	**CASCADE MACS® SYSTEM 120** STAINLESS STEEL 316L PLATE EXCHANGER	**120 x2**	3316006700015
		120 x3	3316006700016
	**CASCADE MACS® SYSTEM 180 HP** STAINLESS STEEL 316L PLATE EXCHANGER	**180 x2**	3316006700020
		180 x3	3316006700021

CASCADE SETUP WITH 2X MACS® 120 MODULES

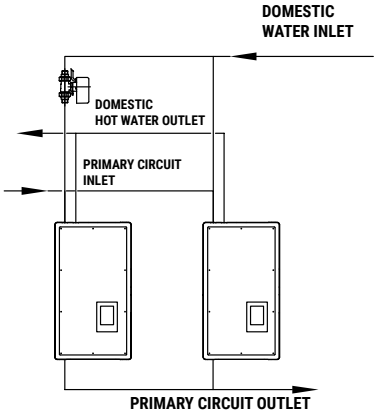

The system includes:

MACS® 120 module	2-WAYS VALVE - 1”
 **x 2**	**x 1** 

CASCADE SETUP WITH 3X MACS® 180 HP MODULES

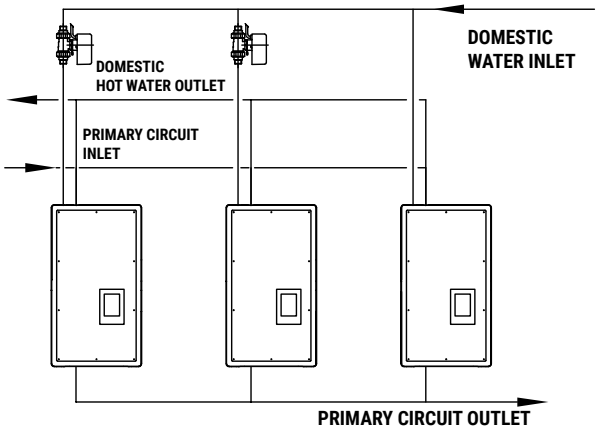

The system includes:

MACS® 180 HP module	2-WAYS VALVE - 1”
 **x 3**	**x 2** 

FRESH WATER MODULE **MACS® CASCADE SETUP**

CASCADE MACS® SYSTEM WITH ELECTRONIC CONTROL UNIT FOR IMMEDIATE DHW PRODUCTION ON LARGE INSTALLATIONS

ELECTRONIC **MACS® 120** TECHNICAL DATA CHART

x2

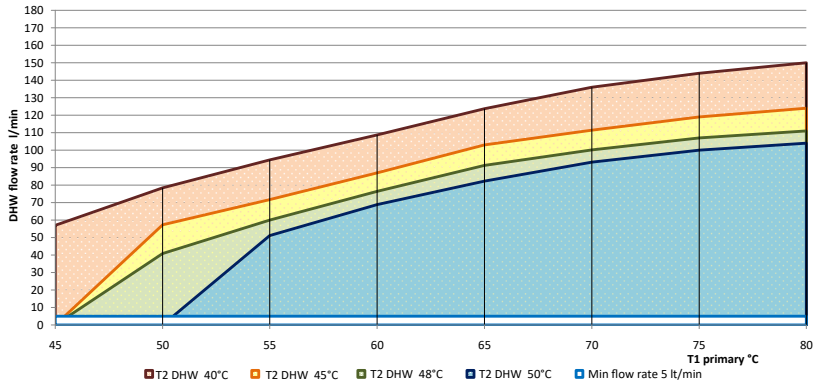

x3

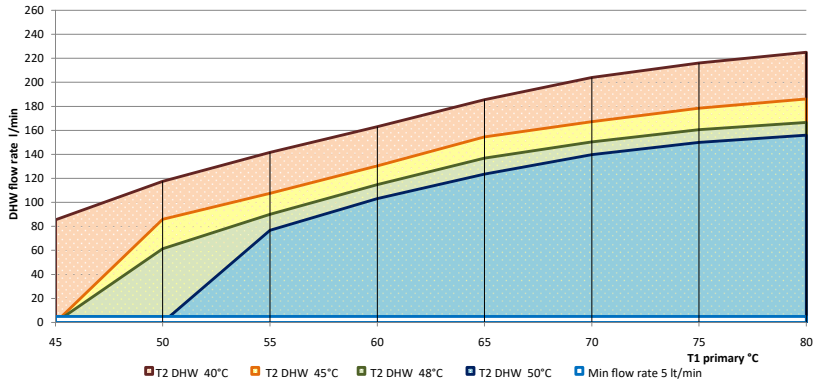

ELECTRONIC **MACS® 180 HP** TECHNICAL DATA CHART

x2

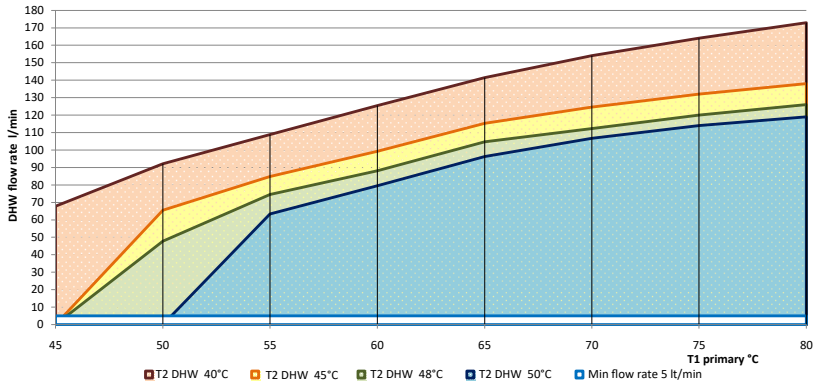

x3

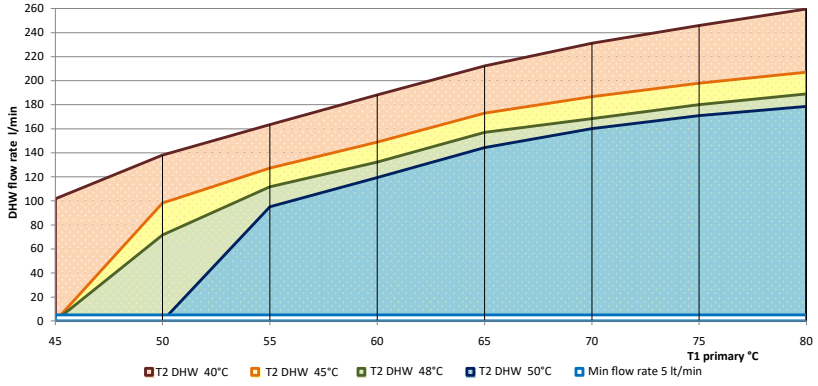

FRESH WATER STATION **PRS**

MODULE FOR IMMEDIATE DHW PRODUCTION





DESCRIPTION

The new PRS modules are designed to rapidly prepare Domestic Hot Water for medium and large-scale facilities; they can work both with accumulation (semi-immediate mode) or without (immediate mode).

.

COMPONENTS

- Inspectable plate heat exchanger with steel structure and exchanger plates made in stainless steel AISI 316L with EPDM gaskets
- Single or double pump for primary circuit
- Motorized 3-way mixing valve (only on high temperature version)
- Electrical control panel with control unit for programmation
- Temperature probes
- Galvanized steel frame
- 230V AC single phase supply.

OPTIONAL

- Insulation for the heat exchanger in aluminium and mineral wool (M0-A1 reaction to fire class)
- Data Logger

OPERATING CONDITIONS

Maximum Working pressure = 10 bar
Maximum temperature of the gaskets = 140 °C

WARRANTY

2 years. See general sales conditions and warranty.

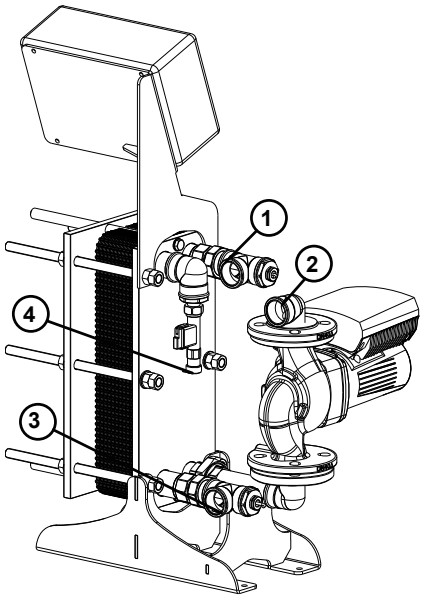

1	Primary Inlet
2	Primary Outlet
3	Domestic water inlet
4	Domestic hot water circuit outlet

FEATURES AND FUNCTIONS OF THE PRS CONTROL UNIT

- Back-lighted display with representation of graphs and texts
- Self-explanatory menu with captions
- Simple visualization of the measured values
- Temperature maintenance of the DHW inlet and of the DHW accumulation, set from the controller
- High operational efficiency thanks to the proportional control of primary pumps speed
- Performance of a series of anti-legionella disinfection cycles, schedulable at preferred time and day of the week, final result showed on the display
- DHW recirculation function control
- Analysis and monitoring of the system through statistics
- Computation of the exchanged heat, on a daily and weekly basis
- Diagnostic unit function for temperature and flow probes



ACCESSORIES

DATA LOGGER

Art. Nr.	
5755280000029	

- Remote monitoring
- Historical anti-legionella cycles data recording on Micro SD card
- Registration of the temperatures achieved in the system

Kit includes: transformer 5 V DC, Micro SD card, CAN-bus cable, terminating resistors and wall plugs.

INSULATION

Art. Nr.	PRS Model	
5655000610013	2045 (up to 31 plates)	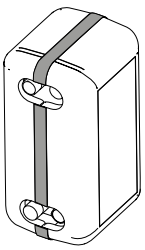
5655000610014	2045 (from 33 to 45 plates)	
5655000610015	2075 (up to 31 plates)	
5655000610016	2075 (from 33 to 45 plates)	
5655000610017	3080 (up to 49 plates)	
5655000610018	3080 (from 51 to 57 plates)	

Insulation with practical velcro closure for quick and easy assembly / disassembly; made in closed cell expanded cross-linked polymeric material with low thermal conductivity. Designed to completely contain the exchanger and its linkage and ensure complete insulation, in order to reduce heat loss and improve the efficiency of the system.
Fire reaction class B2 (DIN 4102)

FRESH WATER STATION **PRS**

MODULE FOR IMMEDIATE DHW PRODUCTION

MOD.	Nr. of Plates	P	H	L HIGH TEMP. model	L LOW TEMP. model
		[mm]			
2045 SINGLE PUMP	**9**	400	906	760	596
	13				
	17				
	21				
	25				
	29				
	33			780	617
	37				
	41				
	45				

MOD.	Nr. of Plates	P	H	L HIGH TEMP. model	L LOW TEMP. model
		[mm]			
2045 DOUBLE PUMP	**9**	403	906	868	703
	13				
	17				
	21				
	25				
	29				
	33			888	724
	37				
	41				
	45				

MOD.	Nr. of Plates	P	H	L HIGH TEMP. model	L LOW TEMP. model
		[mm]			
2075 SINGLE PUMP	**17**	400	1192	760	596
	21				
	25				
	29				
	33			780	617
	37				
	41				
	45				

MOD.	Nr. of Plates	P	H	L HIGH TEMP. model	L LOW TEMP. model
		[mm]			
2075 DOUBLE PUMP	**17**	403	1192	868	703
	21				
	25				
	29				
	33				
	37			888	724
	41				
	45				

MOD.	Nr. of Plates	P	H	L HIGH TEMP. model	L LOW TEMP. model
		[mm]			
3080 SINGLE PUMP	**13**	493	1156	1085	990
	17				
	21				
	25	532		1091	996
	29	542		1111	1016
	33				
	37				
	41				
	45	545		1113	1018
	49			1363	1268
	53				
	57				

MOD.	Nr. of Plates	P	H	L HIGH TEMP. model	L LOW TEMP. model
		[mm]			
3080 DOUBLE PUMP	**13**	535	1156	1205	1110
	17				
	21				
	25			1220	1125
	29				
	33				
	37				
	41	542		1236	1141
	45				
	49	551		1471	1376
	53				
	57				

PRS – FOR LOW TEMPERATURE SYSTEMS

with **DOUBLE** pump

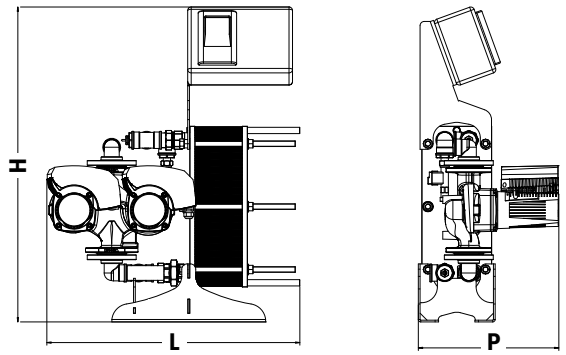

with **SINGLE** pump

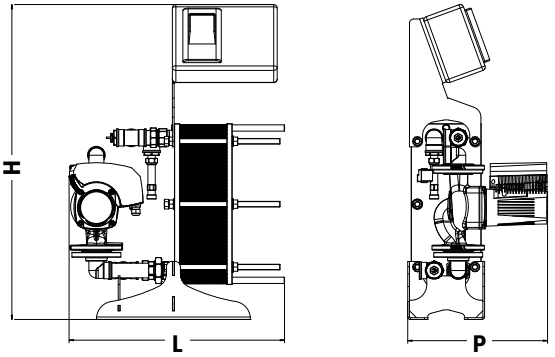

PRS - FOR HIGH TEMPERATURE SYSTEMS

with **DOUBLE** pump

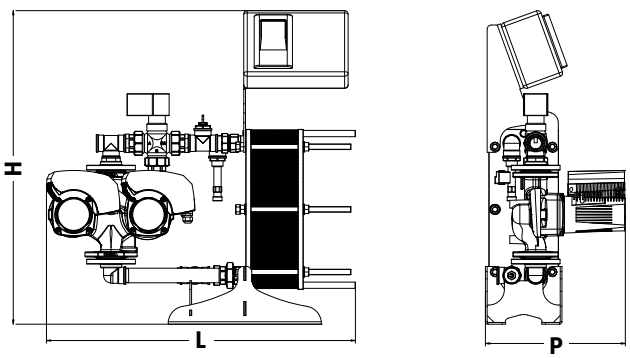

with **SINGLE** pump

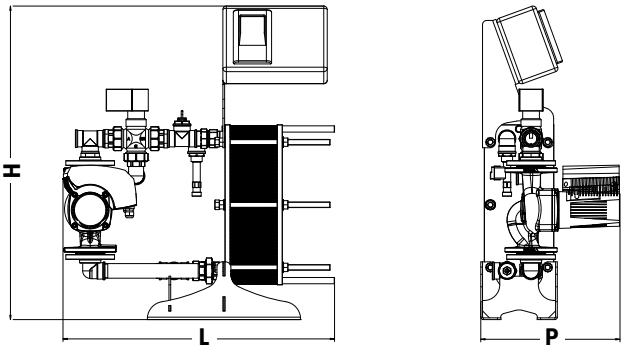



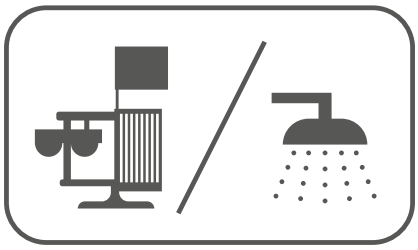

CONFIGURATION WITHOUT DHW STORAGE

LOW TEMPERATURE

SINGLE PUMP

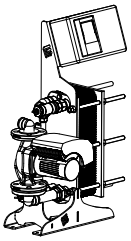

Model	Nr. of plates	Art. Nr.
PHC 2045	9	3435316701330
	13	3435316701331
	17	3435316701332
	21	3435316701333
	25	3435316701334
	29	3435316701335
	33	3435316701336
	37	3435316701337
	41	3435316701338
	45	3435316701339
PHC 2075	17	3435316701410
	21	3435316701411
	25	3435316701412
	29	3435316701413
	33	3435316701414
	37	3435316701415
	41	3435316701416
	45	3435316701417
PHC 3080	13	3435316701474
	17	3435316701475
	21	3435316701476
	25	3435316701477
	29	3435316701478
	33	3435316701479
	37	3435316701480
	41	3435316701481
	45	3435316701482
	49	3435316701483
	53	3435316701484
	57	3435316701485

DOUBLE PUMP

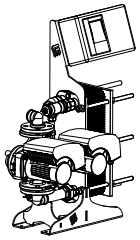

Model	Nr. of plates	Art. Nr.
PHC 2045	9	3435316701340
	13	3435316701341
	17	3435316701342
	21	3435316701343
	25	3435316701344
	29	3435316701345
	33	3435316701346
	37	3435316701347
	41	3435316701348
	45	3435316701349
PHC 2075	17	3435316701418
	21	3435316701419
	25	3435316701420
	29	3435316701421
	33	3435316701422
	37	3435316701423
	41	3435316701424
	45	3435316701425
PHC 3080	13	3435316701486
	17	3435316701487
	21	3435316701488
	25	3435316701489
	29	3435316701490
	33	3435316701491
	37	3435316701492
	41	3435316701493
	45	3435316701494
	49	3435316701495
	53	3435316701496
	57	3435316701497



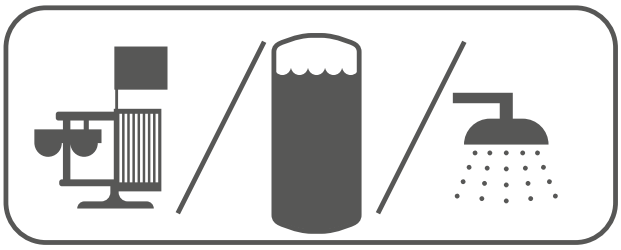

CONFIGURATION FOR DHW STORAGE

LOW TEMPERATURE

SINGLE PUMP

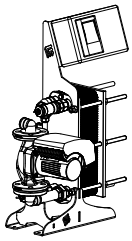

Model	Nr. of plates	Art. Nr.
PHC 2045	9	3435316701350
	13	3435316701351
	17	3435316701352
	21	3435316701353
	25	3435316701354
	29	3435316701355
	33	3435316701356
	37	3435316701357
	41	3435316701358
	45	3435316701359
PHC 2075	17	3435316701426
	21	3435316701427
	25	3435316701428
	29	3435316701429
	33	3435316701430
	37	3435316701431
	41	3435316701432
	45	3435316701433
PHC 3080	13	3435316701498
	17	3435316701499
	21	3435316701500
	25	3435316701501
	29	3435316701502
	33	3435316701503
	37	3435316701504
	41	3435316701505
	45	3435316701506
	49	3435316701507
	53	3435316701508
	57	3435316701509

DOUBLE PUMP

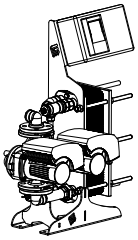

Model	Nr. of plates	Art. Nr.
PHC 2045	9	3435316701360
	13	3435316701361
	17	3435316701362
	21	3435316701363
	25	3435316701364
	29	3435316701365
	33	3435316701366
	37	3435316701367
	41	3435316701368
	45	3435316701369
PHC 2075	17	3435316701434
	21	3435316701435
	25	3435316701436
	29	3435316701437
	33	3435316701438
	37	3435316701439
	41	3435316701440
	45	3435316701441
PHC 3080	13	3435316701510
	17	3435316701511
	21	3435316701512
	25	3435316701513
	29	3435316701514
	33	3435316701515
	37	3435316701516
	41	3435316701517
	45	3435316701518
	49	3435316701519
	53	3435316701520
	57	3435316701521



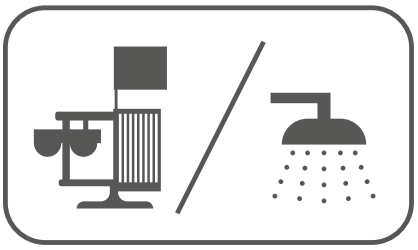

CONFIGURATION WITHOUT DHW STORAGE

HIGH TEMPERATURE

SINGLE PUMP

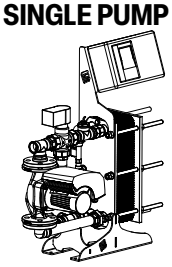

Model	Nr. of plates	Art. Nr.
PHC 2045	9	3435316701370
	13	3435316701371
	17	3435316701372
	21	3435316701373
	25	3435316701374
	29	3435316701375
	33	3435316701376
	37	3435316701377
	41	3435316701378
	45	3435316701379
PHC 2075	17	3435316701442
	21	3435316701443
	25	3435316701444
	29	3435316701445
	33	3435316701446
	37	3435316701447
	41	3435316701448
	45	3435316701449
PHC 3080	13	3435316701522
	17	3435316701523
	21	3435316701524
	25	3435316701525
	29	3435316701526
	33	3435316701527
	37	3435316701528
	41	3435316701529
	45	3435316701530
	49	3435316701531
	53	3435316701532
	57	3435316701533

DOUBLE PUMP

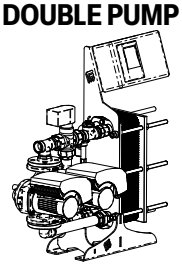

Model	Nr. of plates	Art. Nr.
PHC 2045	9	3435316701380
	13	3435316701381
	17	3435316701382
	21	3435316701383
	25	3435316701384
	29	3435316701385
	33	3435316701386
	37	3435316701387
	41	3435316701388
	45	3435316701389
PHC 2075	17	3435316701450
	21	3435316701451
	25	3435316701452
	29	3435316701453
	33	3435316701454
	37	3435316701455
	41	3435316701456
	45	3435316701457
PHC 3080	13	3435316701534
	17	3435316701535
	21	3435316701536
	25	3435316701537
	29	3435316701538
	33	3435316701539
	37	3435316701540
	41	3435316701541
	45	3435316701542
	49	3435316701543
	53	3435316701544
	57	3435316701545



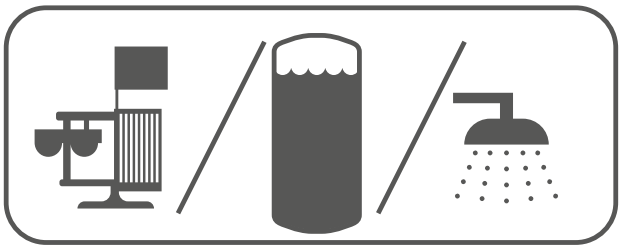

CONFIGURATION FOR DHW STORAGE

HIGH TEMPERATURE

SINGLE PUMP

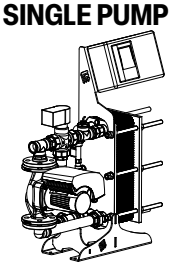

Model	Nr. of plates	Art. Nr.
 PHC 2045	9	3435316701390
	13	3435316701391
	17	3435316701392
	21	3435316701393
	25	3435316701394
	29	3435316701395
	33	3435316701396
	37	3435316701397
	41	3435316701398
	45	3435316701399
 PHC 2075	17	3435316701458
	21	3435316701459
	25	3435316701460
	29	3435316701461
	33	3435316701462
	37	3435316701463
	41	3435316701464
	45	3435316701465
 PHC 3080	13	3435316701546
	17	3435316701547
	21	3435316701548
	25	3435316701549
	29	3435316701550
	33	3435316701551
	37	3435316701552
	41	3435316701553
	45	3435316701554
	49	3435316701555
	53	3435316701556
	57	3435316701557

DOUBLE PUMP

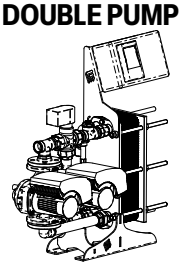

Model	Nr. of plates	Art. Nr.
 PHC 2045	9	3435316701400
	13	3435316701401
	17	3435316701402
	21	3435316701403
	25	3435316701404
	29	3435316701405
	33	3435316701406
	37	3435316701407
	41	3435316701408
	45	3435316701409
 PHC 2075	17	3435316701466
	21	3435316701467
	25	3435316701468
	29	3435316701469
	33	3435316701470
	37	3435316701471
	41	3435316701472
	45	3435316701473
 PHC 3080	13	3435316701558
	17	3435316701559
	21	3435316701560
	25	3435316701561
	29	3435316701562
	33	3435316701563
	37	3435316701564
	41	3435316701565
	45	3435316701566
	49	3435316701567
	53	3435316701568
	57	3435316701569

FRESH WATER STATION **PRS**



EXAMPLE OF INSTALLATION WITH **PRS MODULE -** FOR DHW STORAGE

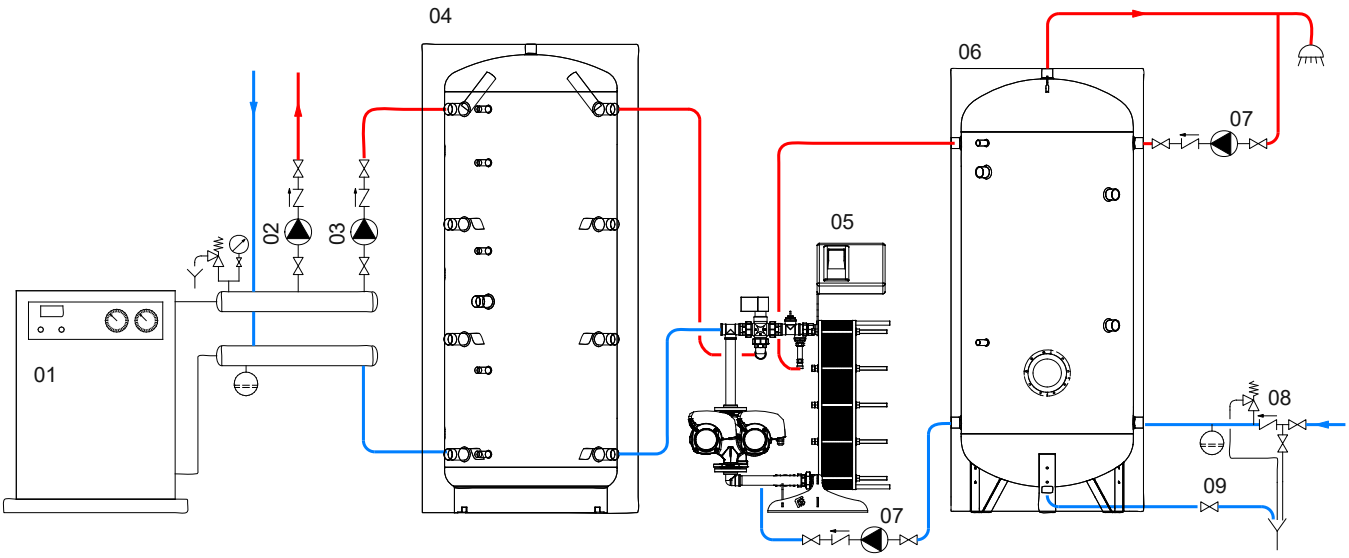

01	Generator	04	PUFFER (Buffer tank)	07	D.H.W. recirculation group
02	Heating system circulation group	05	PRS MODULE	08	Hydraulic safety group
03	Primary circuit circulation group	06	VASO INERZIALE	09	Blowdown valve

EXAMPLE OF INSTALLATION WITH **PRS MODULE -** FOR DHW STORAGE

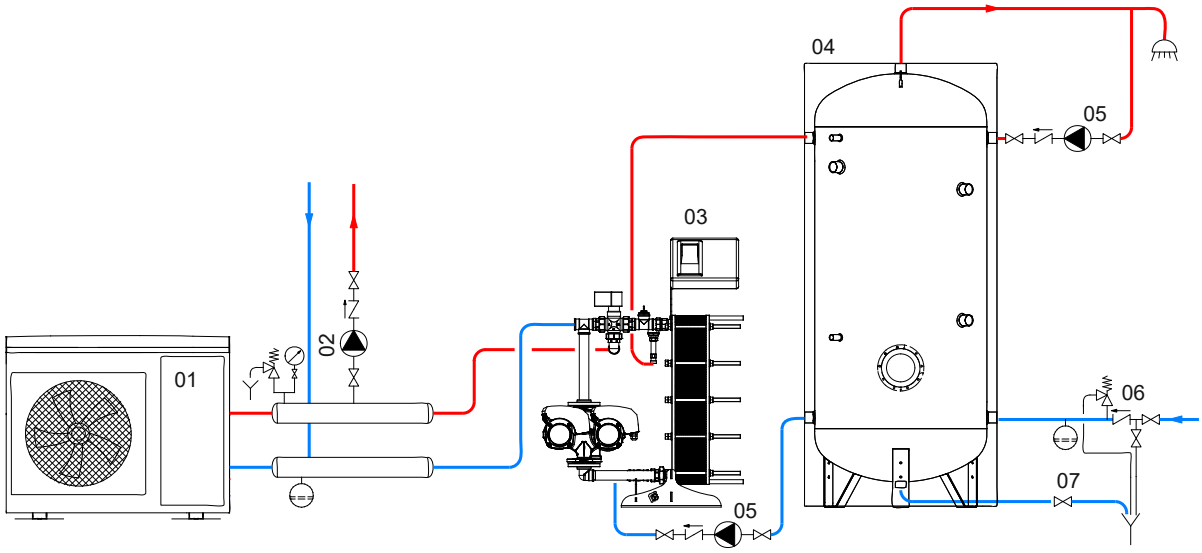

01	Generator	04	VASO INERZIALE	07	Blowdown valve
02	Heating system circulation group	05	D.H.W. recirculation group		
03	PRS MODULE	06	Hydraulic safety group		

The following schemes are purely illustrative. To realize the installation, always refer to a qualified technician.

FRESH WATER STATION **PRS**



EXAMPLE OF INSTALLATION WITH **PRS MODULE -** WITHOUT DHW STORAGE

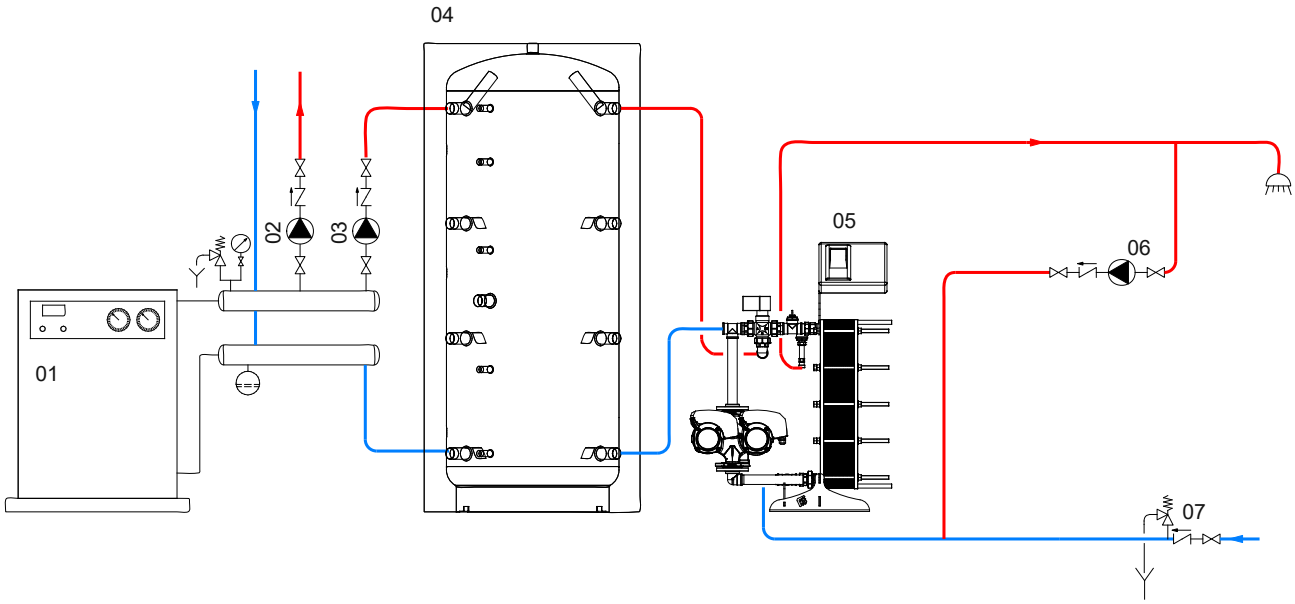

01	Generator	03	Primary circuit circulation group	05	PRS MODULE	07	Hydraulic safety group
02	Heating system circulation group	04	PUFFER (Buffer tank)	06	D.H.W. recirculation group		

The following schemes are purely illustrative. To realize the installation, always refer to a qualified technician.

THERMAL STORAGE TANKS RANGE

THERMAL STORAGE TANKS (PUFFER)

Heating

D.H.W. production



Model	PUFFER 4/6 bar	PUFFER PRIMARIO 4/7 bar	PUFFER COMPACT	PUFFER FLANGED CONNECTIONS	PUFFER 1	PUFFER 2	PUFFER 1 CTS®
Page nr.	308	310	312	314	316	318	322
Application							
Type of heat exchangers	-	-	-	-	- Fixed heat exchanger	- Fixed heat exchanger	- Fixed heat exchanger - Patented stratification module
Number of heat exchangers							
Energy source							
Energy efficiency class	**B-C**	**C**	**-**	**-**	**B-C**	**B-C**	**B-C**
Insulation	- Polyurethane hard foam - Dismountable polyester fleece	- Polyurethane hard foam - Dismountable polyester fleece	- Dismountable polyester fleece	- Dismountable polyester fleece	- Polyurethane hard foam - Dismountable polyester fleece	- Polyurethane hard foam - Dismountable polyester fleece	- Polyurethane hard foam
Available range	200 ÷ 5000	200 ÷ 5000	2500 - 8000	2500 ÷ 20000	300 ÷ 5000	300 ÷ 2000	500 ÷ 2000
Installation	floor standing	floor standing	floor standing	floor standing	floor standing	floor standing	floor standing
Suggested Application	Biomass and possible integration with immersion heater	Heat pump systems and possible integration with immersion heater	Biomass and possible integration with immersion heater	Biomass systems and possible integration with other sources	Biomass with integration of solar thermal and immersion heater	Biomass with integration of solar thermal and other sources and immersion heater	Biomass with integration of solar thermal and immersion heater

BUFFER & COMBINED TANKS RANGE

BUFFER AND COMBINED TANKS

					
COMBI	ECO-COMBI	ECO-COMBI "DOMUS"	PUFFERMAS®	PUFFERMAS® CTS	PUFFERMAS® CTS POWER
324	332	340	344	350	354
- Fixed heat exchanger - DHW storage material: Stainless steel 316L / Polywarm®	- Fixed coil heat exchanger - Corrugated Stainless steel 316L coil for DHW Production	- Fixed coil heat exchanger - Corrugated Stainless steel 316L coil for DHW Production	- Fixed coil heat exchanger - MACS® module for DHW production	- Fixed coil heat exchanger - Patented stratification module - MACS® module for DHW production	- Fixed coil heat exchanger - Patented stratification module - MACS® module for DHW production - Integrated solar station
					
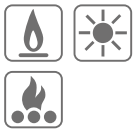		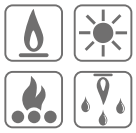	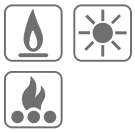	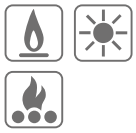	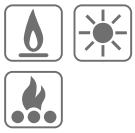
B-C	**B-C**	**B**	**B-C**	**B-C**	**B-C**
- Polyurethane hard foam - Dismountable polyester fleece	- Polyurethane hard foam - Dismountable polyester fleece	- Polyurethane hard foam	- Polyurethane hard foam	- Polyurethane hard foam	- Polyurethane hard foam
500 ÷ 2000	500 ÷ 2000	200 - 300	500 ÷ 1500	500 ÷ 1500	500 ÷ 1500
floor standing	floor standing	floor standing	floor standing	floor standing	floor standing
Biomass with possible integration with other sources	Biomass with possible integration with other sources	Biomass with possible integration with other sources	Biomass with possible integration with other sources	Biomass with possible integration with thermal solar installations	Biomass with possible integration with thermal solar installations

PUFFER **4/6 bar**

HEATING WATER BUFFER TANK



APPLICATION
Efficient storage of hot water for heating purpose
MATERIAL
Mild steel painted on the outside. Buffer intented for closed circuit installation, so no anti-corrosion treatment is provided.
TECHNICAL DESCRIPTION
Used to improve flexibility and performance of pellets, stoves and burners. PUFFER are used in units with a typically discontinuous energy source. Available models with 3 or 6 bar working pressure.

INSULATION
HARD: High thermal insulation with ecological polyurethane hard foam.
SOFT (DISMOUNTABLE): NOFIRE® polyester fleece 100% made of recyclable material, with high thermal insulation. Fire resistance class B-s2d0 according to EN 13501.
Grey PVC external lining.
WARRANTY
5 years (See general sales conditions and warranty)
ACCESSORIES AND SPARE PARTS
See Accessories section for the entire list.

PROMPT AVAILABILITY

4 BAR

	Model	Art. Nr.	ErP ENERGY EFFICIENCY CLASS
PUFFER VB 4 BAR HARD FOAM INSULATION	200	3251162312501	B
	300	3251162312502	B
	500	3251162312503	C
	600	3251162312504	C
	750	3251162312525	B
	800	3251162312526	B
	1000	3251162312527	C
	1250	3251162312508	B
	1500	3251162312509	C
	2000	3251162312510	B
PUFFER VB 4 BAR DISMOUNTABLE HARD FOAM INSULATION	750	3251162312505	B
	800	3251162312506	B
	1000	3251162312507	C
PUFFER VC 4 BAR DISMOUNTABLE SOFT FLEECE INSULATION	750	3251162282804	C
	800	3251162282805	C
	1000	3251162282806	C
	1500	3251162282807	C
	2000	3251162282808	C
	3000	3251162282608	C
	5000	3251162282610	

6 BAR

	Model	Art. Nr.	ErP ENERGY EFFICIENCY CLASS
PUFFER VB 6 BAR HARD FOAM INSULATION	500	3251162312531	C
PUFFER VC 6 BAR DISMOUNTABLE SOFT FLEECE INSULATION	800	3251162282611	C
	1000	3251162282612	C
	1500	3251162282613	C
	2000	3251162282614	C
	3000	3251162282615	
	5000	3251162282616	

Products designed and manufactured for using within temperature and pressure limits in accordance to Art. 4.3 Directive 2014/68/EU (P.E.D.)

PUFFER **4/6 bar**
HEATING WATER BUFFER TANK

STORAGE	
Pmax	Tmax
4/6 bar	99 °C

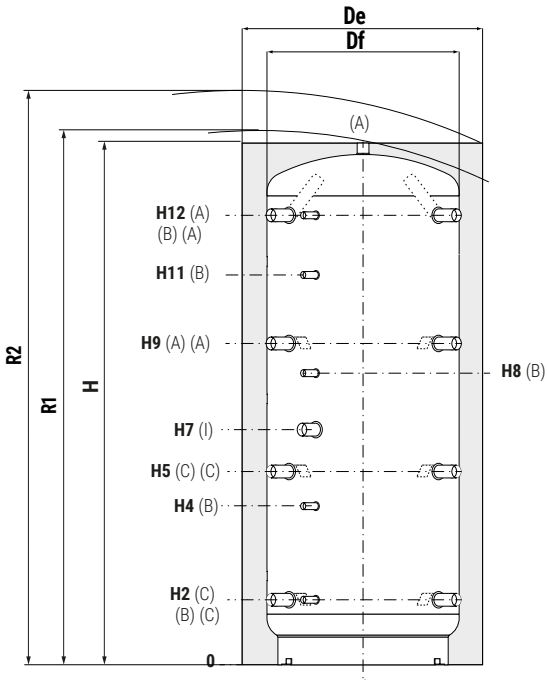

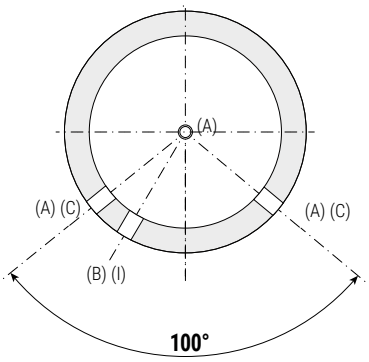

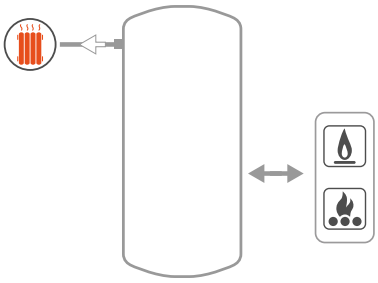

See TECHNICAL SUPPORT chapter for example of installation

A	Heating delivery/from generator
B	Connection for instrumentation G 1/2" F
C	Heating return/to generator
I	Connection for electric immersion heater
O	Drain only for models 3000 and 5000

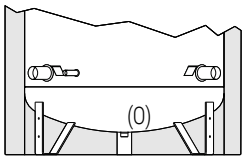

Standard supporting feet for models 3000 and 5000. Drain welded on the bottom.

Model	Volume	Df (vers. VC)	De (vers. VC)	De (vers. VB)	H	R1	R2	H2	H4
	[lt]	[mm]				[mm]			
200	180	//	//	550	1299	//	1415	218	430
300	279	//	//	650	1340	//	1495	232	444
500	478	//	//	750	1645	//	1815	259	545
600	560	//	//	750	1870	//	2020	247	582
750	717	790	1010	950	1658	1710	1915	265	584
800	805	790	1010	950	1840	1890	2075	265	584
1000	946	790	1010	950	2130	2175	2340	265	656
1250	1248	//	//	1050	2201	//	2445	313	705
1500	1454	950	1210	1100	2250	2305	2510	313	736
2000	1973	1100	1360	1300	2320	2390	2665	347	770
3000	2915	1250	1450	//	2814	2890	3170	556	1017
5000	4985	1600	1800	//	2929	3045	3445	586	1047

Model	H5	H7	H8	H9	H11	H12	A-C-I	O
	[mm]						Connections F	
200	500	576	711	782	871	1064	1"1/2	//
300	514	590	725	796	885	1078	1"1/2	//
500	641	853	950	1023	1243	1355	1"1/2	//
600	695	915	1060	1144	1382	1593	1"1/2	//
750	630	823	942	995	1180	1371	1"1/2	//
800	690	823	988	1115	1332	1541	1"1/2	//
1000	787	998	1188	1309	1588	1831	1"1/2	//
1250	835	986	1168	1357	1568	1879	1"1/2	//
1500	845	1061	1286	1377	1653	1909	1"1/2	//
2000	879	1060	1300	1411	1687	1943	1"1/2	//
3000	1071	1693	1879	1786	2140	2402	2"	1"
5000	1101	1691	1889	1816	2159	2432	2"	2"

Net volume data according to EN 15332 available on product label.

Products designed and manufactured for using within temperature and pressure limits in accordance to Art. 4.3 Directive 2014/68/EU (P.E.D.)

PUFFER PRIMARIO **4/7 bar**

HEATING WATER BUFFER TANK



APPLICATION
Efficient storage of hot water for heating purpose
MATERIAL
Mild steel painted on the outside. Buffer intented for closed circuit installation, so no anti-corrosion treatment is provided.
TECHNICAL DESCRIPTION
Used to improve flexibility and performance of pellets, stoves and burners. PUFFER are used in units with a typically discontinuous energy source.
Available models with 4 or 7 bar working pressure.

INSULATION
HARD: High thermal insulation with ecological polyurethane hard foam.
SOFT (DISMOUNTABLE): NOFIRE® polyester fleece 100% made of recyclable material, with high thermal insulation. Fire resistance class B-s2d0 according to EN 13501.
Grey PVC external lining.
WARRANTY
5 years (See general sales conditions and warranty)
ACCESSORIES AND SPARE PARTS
See Accessories section for the entire list.

PROMPT AVAILABILITY

4 BAR

	Model	Art. Nr.	ErP ENERGY EFFICIENCY CLASS
PUFFER PRIMARIO VC 4 BAR DISMOUNTABLE SOFT FLEECE INSULATION	**500**	3251162282113	**C**
	800	3251162282114	**C**
	1000	3251162282115	**C**
PUFFER PRIMARIO VC 4 BAR (flanged connections) DISMOUNTABLE SOFT FLEECE INSULATION	**1500**	3251162282116	**C**
	2000	3251162282117	**C**
	2500	3251162282118	
	3000	3251162282119	
	4000	3251162282120	
	5000	3251162282121	

7 BAR

	Model	Art. Nr.	ErP ENERGY EFFICIENCY CLASS
PUFFER PRIMARIO VC 7 BAR DISMOUNTABLE SOFT FLEECE INSULATION	**500**	3251162282153	**C**
	800	3251162282154	**C**
	1000	3251162282155	**C**
PUFFER PRIMARIO VC 7 BAR (flanged connections) DISMOUNTABLE SOFT FLEECE INSULATION	**1500**	3251162282156	**C**
	2000	3251162282157	**C**
	2500	3251162282158	
	3000	3251162282159	
	4000	3251162282160	
	5000	3251162282161	

ACCESSORIES

Thermometer

Art. Nr.
5032240000107
5 units box



Buffer tanks connecting kit

Art. Nr.	Connection
5006170001001	1" 1/2
Stainless steel extensible connecting kit - (200 ÷ 400 mm)	



Products designed and manufactured for using within temperature and pressure limits in accordance to Art. 4.3 Directive 2014/68/EU (P.E.D.)

PUFFER PRIMARIO **4/7 bar**

HEATING WATER BUFFER TANK

STORAGE	
Pmax	Tmax
4 bar 7 bar	99 °C

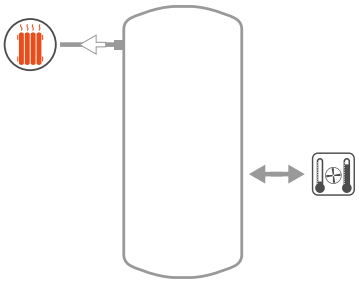

See TECHNICAL SUPPORT chapter for example of installation

MODELS 500 ÷ 1000

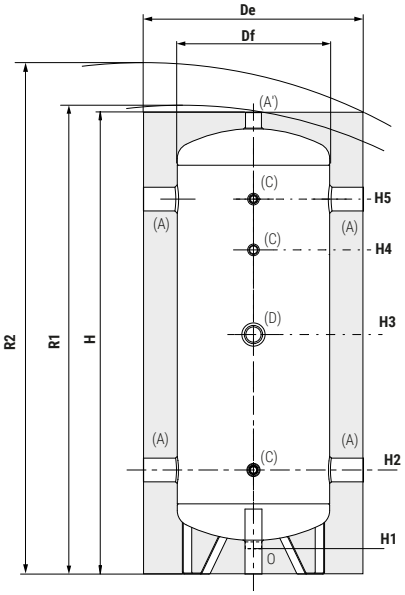

MODELS 1500 ÷ 5000

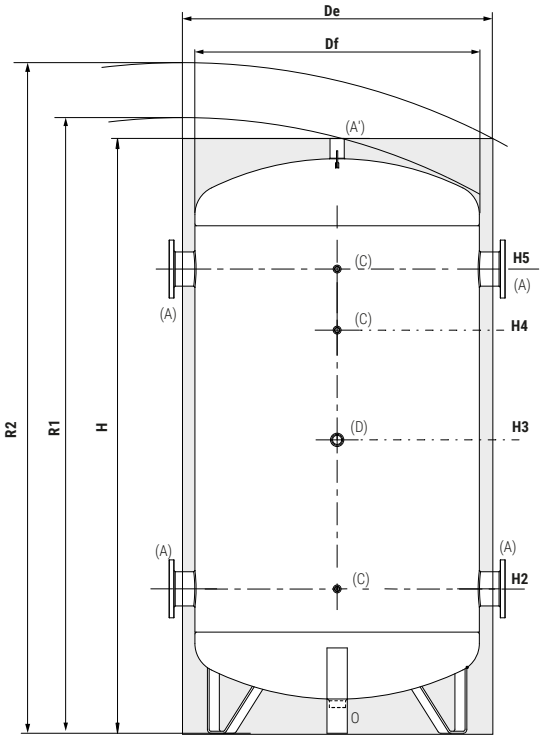

A	Heating delivery
A'	Heating delivery
C	Connection for instrumentation G 1/2" F
D	Connection for electric immersion heater G 1" 1/2 F
O	Drain

PUFFER PRIMARIO VC 4 BAR

Model	Volume	Df	De	H	R1	R2	H1	H2	H3	H4	H5	O	A'	A
	[lt]	[mm]										Connections F		
500	478	650	870	1755	1790	1970	80	355	655	1155	1405	1" 1/4	1" 1/4	3"
800	789	750	970	2180	2220	2400	115	460	860	1460	1760	1" 1/4	1" 1/4	3"
1000	989	850	1070	2115	2170	2380	105	425	825	1425	1725	1" 1/2	1" 1/2	3"
1500	1417	950	1210	2405	2460	2700	125	590	920	1570	1870	2"	2"	DN100 PN16
2000	1949	1100	1360	2460	2530	2820	105	610	940	1590	1890	2"	2"	DN100 PN16
2500	2306	1250	1470	2355	2450	2790	150	685	970	1520	1755	2"	2"	DN150 PN16
3000	2915	1250	1470	2855	2930	3220	150	685	1470	2020	2255	2"	2"	DN150 PN16
4000	3762	1400	1620	2930	3020	3360	135	715	1500	2050	2285	2"	2"	DN150 PN16
5000	4984	1600	1820	2970	3080	3490	115	725	1510	2060	2295	2"	2"	DN200 PN16

Net volume data according to EN 15332 available on product label.

PUFFER PRIMARIO VC 7 BAR

Model	Volume	Df	De	H	R1	R2	H1	H2	H3	H4	H5	O	A'	A
	[lt]	[mm]										Connections F		
500	478	650	870	1880	1920	2080	125	445	745	1245	1495	1" 1/4	1" 1/4	3"
800	788	750	970	2180	2220	2400	115	460	860	1460	1760	1" 1/4	1" 1/4	3"
1000	1034	850	1070	2235	2280	2490	100	480	880	1480	1780	1" 1/2	1" 1/2	3"
1500	1435	950	1210	2435	2490	2730	125	590	920	1600	1900	2"	2"	DN100 PN16
2000	1967	1100	1360	2490	2560	2850	105	610	940	1620	1920	2"	2"	DN100 PN16
2500	2294	1250	1470	2355	2450	2790	150	685	970	1520	1755	2"	2"	DN150 PN16
3000	2900	1250	1470	2855	2930	3220	150	685	1470	2020	2255	2"	2"	DN150 PN16
4000	3749	1400	1620	2930	3020	3360	135	715	1500	2050	2285	2"	2"	DN150 PN16
5000	4963	1600	1820	2970	3080	3490	115	725	1510	2060	2295	2"	2"	DN200 PN16

Net volume data according to EN 15332 available on product label.

Products designed and manufactured for using within temperature and pressure limits in accordance to Art. 4.3 Directive 2014/68/EU (P.E.D.)

PUFFER **COMPACT**

HEATING WATER BUFFER TANK SUITABLE FOR LOW-CEILINGED ROOMS



APPLICATION
Efficient storage of hot water for heating purpose.
Suitable for low-ceilinged room.
MATERIAL
Mild steel painted on the outside. Buffer intented for closed circuit installation, so no anti-corrosion treatment is provided.
TECHNICAL DESCRIPTION
Used to improve flexibility and performance of pellets, stoves and burners. PUFFER COMPACT are used in units with a typically discontinuous energy source.
Suitable for low-ceilinged rooms.

INSULATION
NOFIRE® polyester fleece 100% made of recyclable material, with high thermal insulation. Fire resistance class B-s2d0 according to EN 13501. Grey PVC external lining.
WARRANTY
5 years (See general sales conditions and warranty)
ACCESSORIES AND SPARE PARTS
See Accessories section for the entire list.





PUFFER COMPACT VC
DISMOUNTABLE SOFT FLEECE INSULATION

Model	Art. Nr.
2500	3251162280370
3000	3251162282658
4000	3251162282659
4500	3251162282660
5000	3251162282661
6000	3251162282662
8000	3251162282663

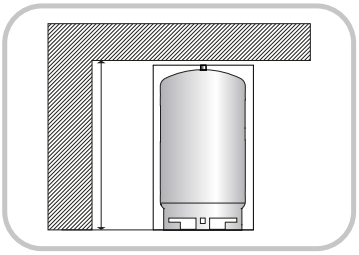

SUITABLE FOR LOW-CEILINGED ROOMS

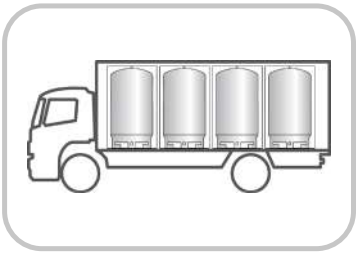

EASY TO TRANSPORT

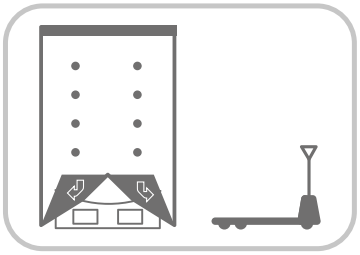

EASY TO MOVE

ACCESSORIES

Thermometer

Art. Nr.
5032240000107
5 units box



Products designed and manufactured for using within temperature and pressure limits in accordance to Art. 4.3 Directive 2014/68/EU (P.E.D.)

PUFFER **COMPACT**

HEATING WATER BUFFER TANK SUITABLE FOR LOW-CEILINGED ROOMS

STORAGE	
Pmax	Tmax
4 bar	99 °C

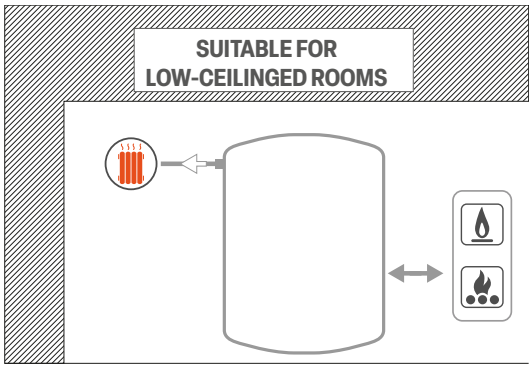

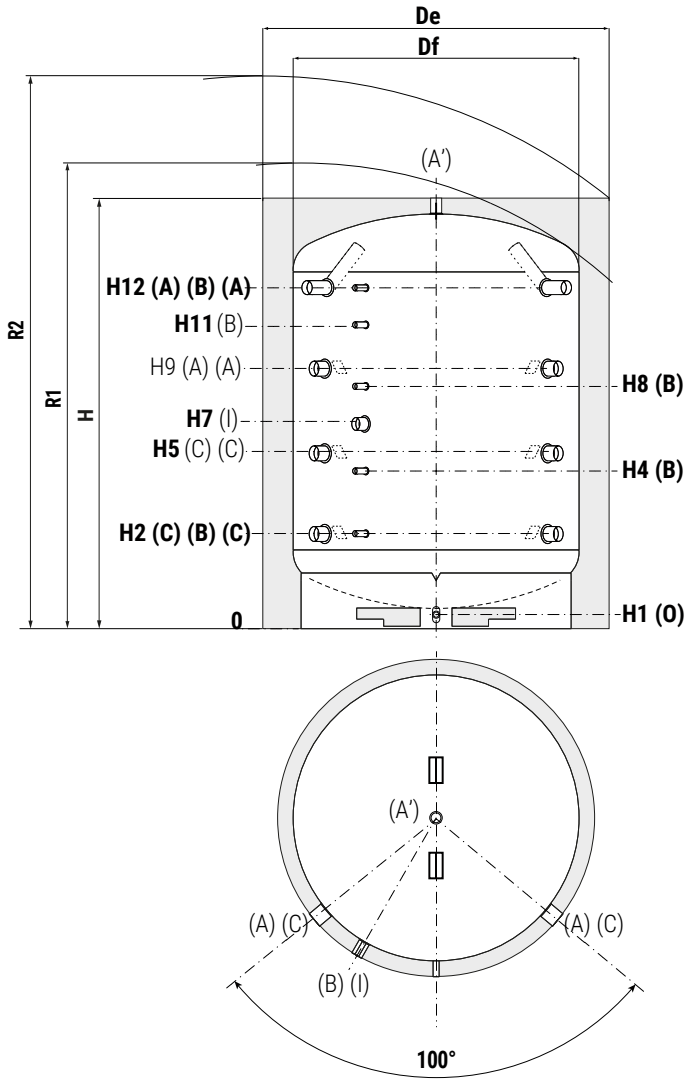

A'	Heating delivery
A	Heating delivery/from generator
B	Connection for instrumentation G 1/2" F
C	Heating return/to generator
I	Connection for electric immersion heater
O	Drain

Model	Volume	Df	De	H	R1	R2	H1	H2	H4
	[lt]	[mm]							
2500	2306	1250	1450	2351	2465	2770	140	556	886
3000	3017	1500	1700	2180	2372	2770	109,5	567	841
4000	3986	1600	1800	2456	2643	3050	94,5	574	910
4500	4411	1800	2000	2230	2565	3000	90	582	856
5000	5042	1800	2000	2480	2758	3190	90	583	919
6000	5672	1800	2000	2730	2960	3390	90	605	1005
8000	7564	1800	2000	3480	3650	4020	90	606	1066

Model	H5	H7	H8	H9	H11	H12	A - C	A' - I	O
	[mm]						Connections F		
2500	996	1051	1216	1436	1546	1876	1"1/2	1"1/2	-
3000	932	1252	1115	1297	1389	1662	2"	2"	1"
4000	1022	1414	1246	1470	1582	1918	2"	2"	1"
4500	947	1267	1130	1312	1404	1677	2"	2"	1"
5000	1031	1423	1255	1479	1591	1927	2"	2"	1"
6000	1114	1295	1535	1646	1922	2155	3"	2"	1"
8000	1372	1526	1986	2138	2446	2904	3"	2"	1"

Net volume data according to EN 15332 available on product label.

Products designed and manufactured for using within temperature and pressure limits in accordance to Art. 4.3 Directive 2014/68/EU (P.E.D.)

PUFFER **FLANGED CONNECTIONS**

HEATING WATER BUFFER TANKS WITH 90° AND 180° FLANGED CONNECTIONS



APPLICATION
Efficient storage of hot water for heating purpose.
MATERIAL
Mild steel painted on the outside. Buffer intented for closed circuit installation, so no anti-corrosion treatment is provided.
TECHNICAL DESCRIPTION
Used to improve flexibility and performance of pellets, stoves and burners.
PUFFER FLANGED are used in units with a typically discontinuous energy source.
PUFFER FLANGED have been conceived for medium/large biomass heating plants where flanged connections are required.
PUFFER FLANGED have reduced height for maximum installation flexibility.

INSULATION
NOFIRE® polyester fleece 100% made of recyclable material, with high thermal insulation. Fire resistance class B-s2d0 according to EN 13501.
Grey PVC external lining.
WARRANTY
5 years (See general sales conditions and warranty)
ACCESSORIES AND SPARE PARTS
See Accessories section for the entire list.





PUFFER FLANGIATI VC (180°)
DISMOUNTABLE SOFT FLEECE INSULATION

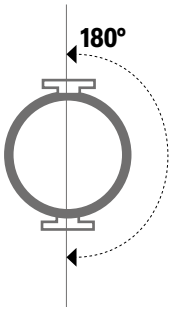

Model	Art. Nr.
2500	3251162282680
3000	3251162282681
4000	3251162282682
4500	3251162282683
5000	3251162282684
6000	3251162282685
8000	3251162282686
10000	3251162282620
12000	3251162282621
20000	3251162282697





PUFFER FLANGIATI VC (90°)
DISMOUNTABLE SOFT FLEECE INSULATION

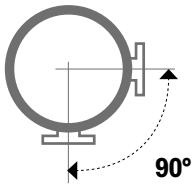

Model	Art. Nr.
2500	3251162282690
3000	3251162282691
4000	3251162282692
4500	3251162282693
5000	3251162282694
6000	3251162282695
8000	3251162282696
10000	3251162282622
12000	3251162282623
20000	3251162282698

ACCESSORIES

Thermometer

Art. Nr.
5032240000107
5 units box



Products designed and manufactured for using within temperature and pressure limits in accordance to Art. 4.3 Directive 2014/68/EU (P.E.D.)

PUFFER **FLANGED CONNECTIONS**

HEATING WATER BUFFER TANKS WITH 90° AND 180° FLANGED CONNECTIONS

	STORAGE	
	Pmax	Tmax
2500 ÷ 8000	4 bar	99 °C
10000 ÷ 20000	3 bar	99 °C

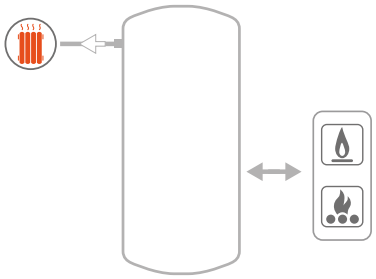



A'	Heating delivery
A	Heating delivery/from generator
B	Connection for instrumentation G 1/2" F
C	Heating return/to generator
O	Drain



180° FLANGED CONNECTIONS

90° FLANGED CONNECTIONS

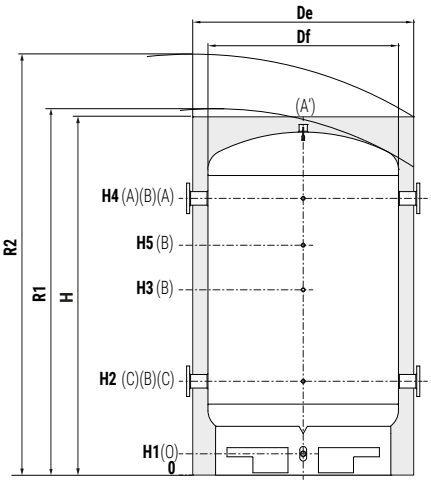

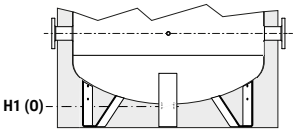

Standard supporting feet for models 10000 - 12000

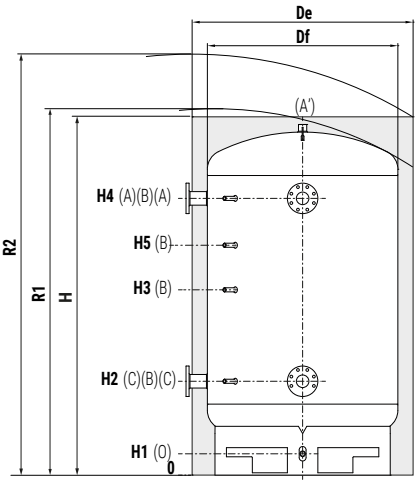

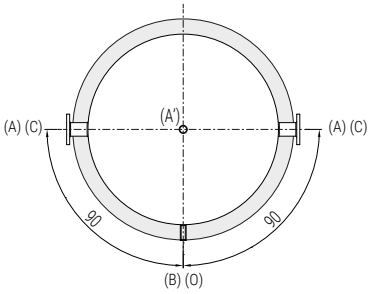

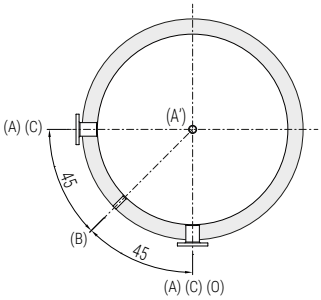

Model	Volume	Df	De	H	R1	R2	H1	H2	H3	H4	H5	A - C	A'	O
	[lt]	[mm]										Connections F		
2500	2304	1250	1450	2351	2460	2770	140	616	1216	1816	//	PN16 DN80	1"1/2	1"
3000	3018	1500	1700	2180	2375	2770	109	640	1115	1590	//	PN16 DN80	2"	1"
4000	3987	1600	1800	2456	2655	3050	95	646	1246	1846	//	PN16 DN80	2"	1"
4500	4412	1800	2000	2230	2560	3000	89	655	1130	1605	//	PN16 DN80	2"	1"
5000	5042	1800	2000	2480	2755	3190	89	675	1255	1835	//	PN16 DN100	2"	1"
6000	5673	1800	2000	2730	2985	3390	89	675	1380	2085	//	PN16 DN100	2"	1"
8000	7564	1800	2000	3480	3665	4020	89	675	1705	2835	//	PN16 DN100	2"	1"
10000	10455	2000	2200	3916	4050	4500	191	826	1636	3256	2446	PN16 DN100	2"	2"
12000	12010	2000	2200	4461	4580	4980	191	826	1803	3756	2779	PN16 DN100	2"	2"
20000	19984	2400	2600	5060	5240	5695	140	840	1990	4290	3140	PN16 DN100	2"	2"

Net volume data according to EN 15332 available on product label.

Products designed and manufactured for using within temperature and pressure limits in accordance to Art. 4.3 Directive 2014/68/EU (P.E.D.)

PUFFER 1

HEATING WATER BUFFER TANK WITH 1 FIXED HEAT EXCHANGER



PROMPT AVAILABILITY

APPLICATION
Heating hot water storage.

MATERIAL
Mild steel painted on the outside. Buffer intented for closed circuit installation, so no anti-corrosion treatment is provided.

HEAT EXCHANGER
Nr. 1 mild steel fixed heat exchanger.

TECHNICAL DESCRIPTION
Used to improve flexibility and performance of pellets, stoves and burners.
PUFFER 1 are used in units with a typically discontinuous energy source.
PUFFER 1 allows the solar energy system integration.

INSULATION
HARD: High thermal insulation with ecological polyurethane hard foam.
SOFT (DISMOUNTABLE): NOFIRE® polyester fleece 100% made of recyclable material, with high thermal insulation. Fire resistance class B-s2d0 according to EN 13501.
Grey PVC external lining.

WARRANTY
5 years (See general sales conditions and warranty)

ACCESSORIES AND SPARE PARTS
See Accessories section for the entire list.

	Model	Art. Nr.	Heat exchangers surface [m²]	ErP ENERGY EFFICIENCY CLASS
PUFFER 1 VB HARD FOAM INSULATION	**300**	3251162312201	1,0	**B**
	500	3251162312202	1,9	**C**
	600	3251162312203	2,1	**C**
	750	3251162312214	2,3	**B**
	800	3251162312215	2,5	**B**
	1000	3251162312216	3,1	**C**
	1250	3251162312207	3,4	**B**
	1500	3251162312208	3,8	**C**
	2000	3251162312209	4,6	**B**
PUFFER 1 VB DISMOUNTABLE HARD FOAM INSULATION	**750**	3251162312204	2,3	**B**
	800	3251162312205	2,5	**B**
	1000	3251162312206	3,1	**C**
PUFFER 1 VC DISMOUNTABLE SOFT FLEECE INSULATION	**750**	3251162282814	2,3	**C**
	800	3251162282815	2,5	**C**
	1000	3251162282816	3,1	**C**
	1500	3251162282817	3,8	**C**
	2000	3251162282818	4,6	**C**
	3000	3251162282308	6,2	
	5000	3251162282309	7,5	

ACCESSORIES

Electric immersion heater



Available kit	
[Kw]	Tension [V]
from **1,5** to **3**	220 - MONOPHASE
from **4** to **12**	400 - THREEPHASE
See accessories	

Thermometer

Art. Nr.
5032240000107
5 units box



Buffer tanks connecting kit

Art. Nr.	Connection
5006170001001	1" 1/2
Stainless steel extensible connecting kit - (200 ÷ 400 mm)	



Products designed and manufactured for using within temperature and pressure limits in accordance to Art. 4.3 Directive 2014/68/EU (P.E.D.)

PUFFER **1**

HEATING WATER BUFFER TANK WITH 1 FIXED HEAT EXCHANGER

STORAGE		HEAT EXCHANGER	
Pmax	Tmax	Pmax	Tmax
4 bar	99 °C	12 bar	110 °C

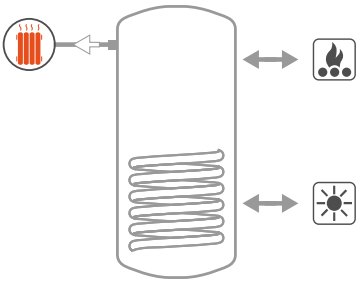

See TECHNICAL SUPPORT chapter for example of installation

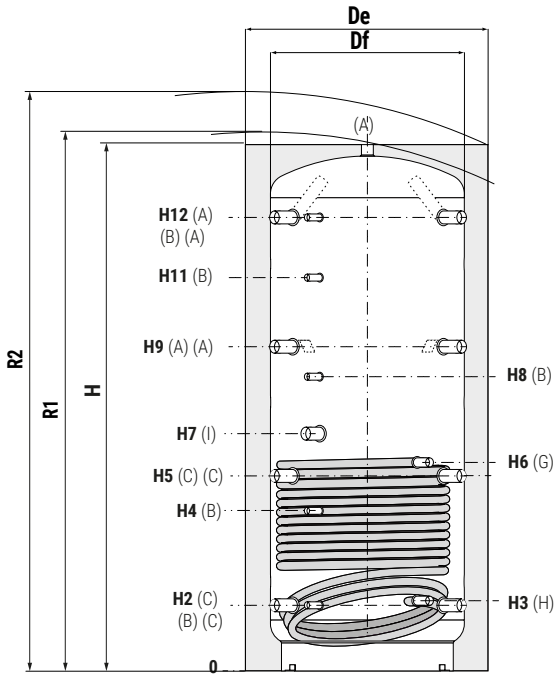

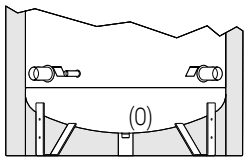

Standard supporting feet for models 3000 and 5000. Drain welded on the bottom.

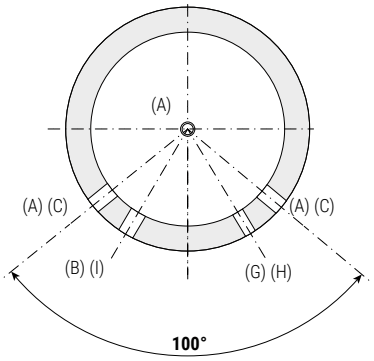

A	Heating delivery/from generator
B	Connection for instrumentation G 1/2" F
C	Heating return/to generator
I	Connection for electric immersion heater
G	Fixed heat exchanger inlet G 1" F
H	Fixed heat exchanger outlet G 1" F
O	Drain only for models 3000 and 5000

Model	Volume	Df (vers. VC)	De (vers. VC)	De (vers. VB)	H	R1	R2	H2	H3	H4
	[lt]	[mm]					[mm]			
300	279	//	//	650	1340	//	1495	232	217	444
500	478	//	//	750	1645	//	1815	259	272	545
600	560	//	//	750	1870	//	2020	247	260	582
750	717	790	1010	950	1658	1665	1915	265	278	584
800	805	790	1010	950	1840	1845	2075	265	278	584
1000	946	790	1010	950	2130	2135	2340	265	284	656
1250	1248	//	//	1050	2201	//	2445	313	326	705
1500	1454	950	1210	1100	2250	2255	2510	313	336	736
2000	1973	1100	1360	1300	2320	2325	2665	347	370	770
3000	2915	1250	1450	//	2814	2820	3170	556	569	1017
5000	4985	1600	1800	//	2929	2935	3445	586	609	1047

Model	H5	H6	H7	H8	H9	H11	H12	A - C - I	O
	[mm]							Connections F	
300	514	514	590	725	796	885	1078	1"1/2	//
500	641	756	853	950	1023	1243	1355	1"1/2	//
600	695	855	915	1060	1144	1382	1593	1"1/2	//
750	630	679	823	938	995	1180	1371	1"1/2	//
800	690	762	823	988	1115	1332	1541	1"1/2	//
1000	787	953	998	1188	1309	1588	1831	1"1/2	//
1250	835	884	986	1168	1357	1568	1879	1"1/2	//
1500	845	1006	1061	1286	1377	1653	1909	1"1/2	//
2000	879	1001	1060	1300	1411	1687	1943	1"1/2	//
3000	1071	1551	1693	1879	1786	2140	2402	2"	1"
5000	1101	1522	1691	1889	1816	2159	2432	2"	2"

Net volume data according to EN 15332 available on product label.

Products designed and manufactured for using within temperature and pressure limits in accordance to Art. 4.3 Directive 2014/68/EU (P.E.D.)

PUFFER 2

HEATING WATER BUFFER TANK WITH 2 FIXED HEAT EXCHANGERS



APPLICATION
Heating hot water storage.
MATERIAL
Mild steel painted on the outside. Buffer intented for closed circuit installation, so no anti-corrosion treatment is provided.
HEAT EXCHANGERS
Nr. 2 mild steel fixed heat exchangers.
TECHNICAL DESCRIPTION
Used to improve flexibility and performance of pellets, stoves and burners. PUFFER 2 allows the solar energy system integration as well as another heat source.

INSULATION
HARD: High thermal insulation with ecological polyurethane hard foam.
SOFT (DISMOUNTABLE): NOFIRE® polyester fleece 100% made of recyclable material, with high thermal insulation. Fire resistance class B-s2d0 according to EN 13501.
Grey PVC external lining.
WARRANTY
5 years (See general sales conditions and warranty)
ACCESSORIES AND SPARE PARTS
See Accessories section for the entire list.

	Model	Art. Nr.	Heat exchangers surface [m²]		ErP
			Upper	Lower	ENERGY EFFICIENCY CLASS
PUFFER 2 VB HARD FOAM INSULATION	**500**	3251162312703	1,3	1,9	**C**
	600	3251162312704	1,3	2,1	**C**
	750	3251162312715	1,5	2,3	**B**
	800	3251162312716	1,8	2,5	**B**
	1000	3251162312717	2,5	3,1	**C**
	1500	3251162312709	2,8	3,8	**C**
	2000	3251162312710	2,8	4,6	**B**
PUFFER 2 VB DISMOUNTABLE HARD FOAM INSULATION	**750**	3251162312705	1,5	2,3	**B**
	800	3251162312706	1,8	2,5	**B**
	1000	3251162312707	2,5	3,1	**C**
PUFFER 2 VC DISMOUNTABLE SOFT FLEECE INSULATION	**750**	3251162282824	1,5	2,3	**C**
	800	3251162282825	1,8	2,5	**C**
	1000	3251162282826	2,5	3,1	**C**
	1500	3251162282827	2,8	3,8	**C**
	2000	3251162282828	2,8	4,6	**C**

ACCESSORIES

Electric immersion heater



Available kit	
[Kw]	Tension [V]
from **1,5** to **3**	220 - MONOPHASE
from **4** to **12**	400 - THREEPHASE
See accessories	

Thermometer

Art. Nr.
5032240000107
5 units box



Buffer tanks connecting kit

Art. Nr.	Connection
5006170001001	1" 1/2
Stainless steel extensible connecting kit - (200 ÷ 400 mm)	



Products designed and manufactured for using within temperature and pressure limits in accordance to Art. 4.3 Directive 2014/68/EU (P.E.D.)

PUFFER **2**

HEATING WATER BUFFER TANK WITH 2 FIXED HEAT EXCHANGERS

STORAGE		HEAT EXCHANGER	
Pmax	Tmax	Pmax	Tmax
4 bar	99 °C	12 bar	110 °C

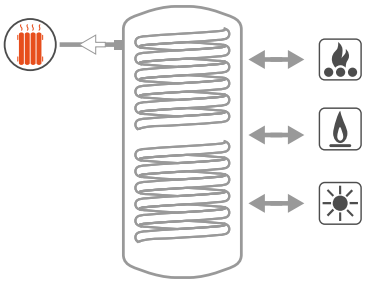

See TECHNICAL SUPPORT chapter for example of installation

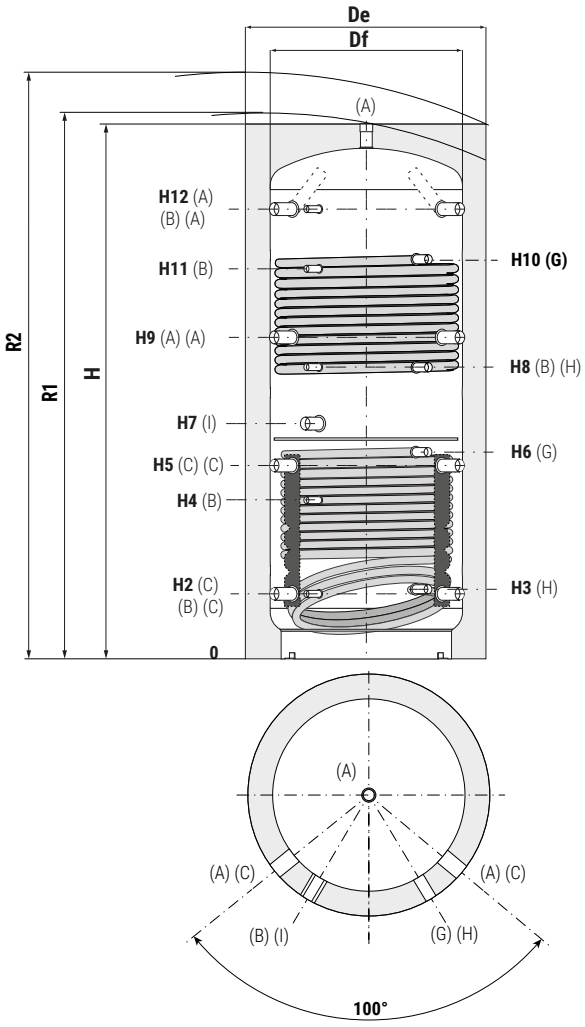

A	Heating delivery/from generator
B	Connection for instrumentation G 1/2" F
C	Heating return/to generator
I	Connection for electric immersion heater
G	Fixed heat exchanger inlet G 1" F
H	Fixed heat exchanger outlet G 1" F

Model	Volume	Df (vers. VC)	De (vers. VC)	De (vers. VB)	H	R1	R2	H2	H3
	[lt]	[mm]		[mm]					
500	478	//	//	750	1620	//	1790	247	260
600	560	//	//	750	1870	//	2020	247	260
750	717	790	1010	950	1658	1710	1915	265	278
800	805	790	1010	950	1840	1890	2075	265	278
1000	946	790	1010	950	2130	2175	2340	265	284
1500	1435	950	1210	1100	2250	2305	2510	313	336
2000	1973	1100	1360	1300	2320	2390	2665	347	370

Model	H4	H5	H6	H7	H8	H9	H10	H11	H12	A - C - I
	[mm]									Connections F
500	533	629	745	841	930	1011	1231	1231	1343	1"1/2
600	582	695	855	915	1060	1144	1361	1382	1593	1"1/2
750	584	630	679	823	938	995	1196	1180	1371	1"1/2
800	584	690	762	823	988	1115	1332	1332	1541	1"1/2
1000	656	787	953	998	1188	1309	1661	1588	1831	1"1/2
1500	736	845	1006	1061	1286	1377	1672	1653	1909	1"1/2
2000	770	879	1001	1060	1300	1411	1687	1687	1943	1"1/2

Net volume data according to EN 15332 available on product label.

Products designed and manufactured for using within temperature and pressure limits in accordance to Art. 4.3 Directive 2014/68/EU (P.E.D.)

PUFFER 1

LOWER HEAT EXCHANGER POWER



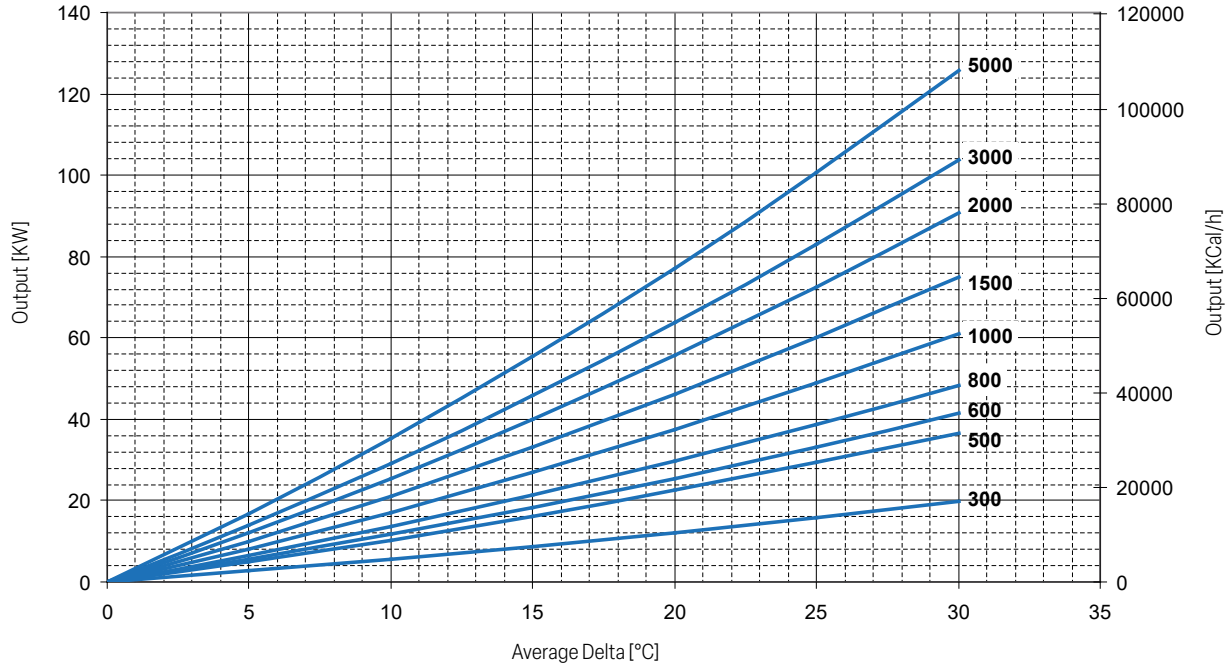

Thermal output is given in both kW or kcal/h in terms of average temperature difference between primary and secondary circuit, all for a range of primary 3 m^3/h.
For example, a PUFFER 1 T of 1000 liters capacity with a water flow of 3 m^3/h at 80 °C inlet and outlet at 70 °C, has on the storage of water an average temperature of 60 °C, the main difference of temperature will be:
(80 +70) / 20-60 = 15 °C and therefore you can exchange up to approximately 34 kW.

Output of the lower heat exchangers PUFFER 1 depending on the average DeltaT between primary and accumulation considering flow rate 3 m3/h.

LOWER HEAT EXCHANGER PRESSURE DROP

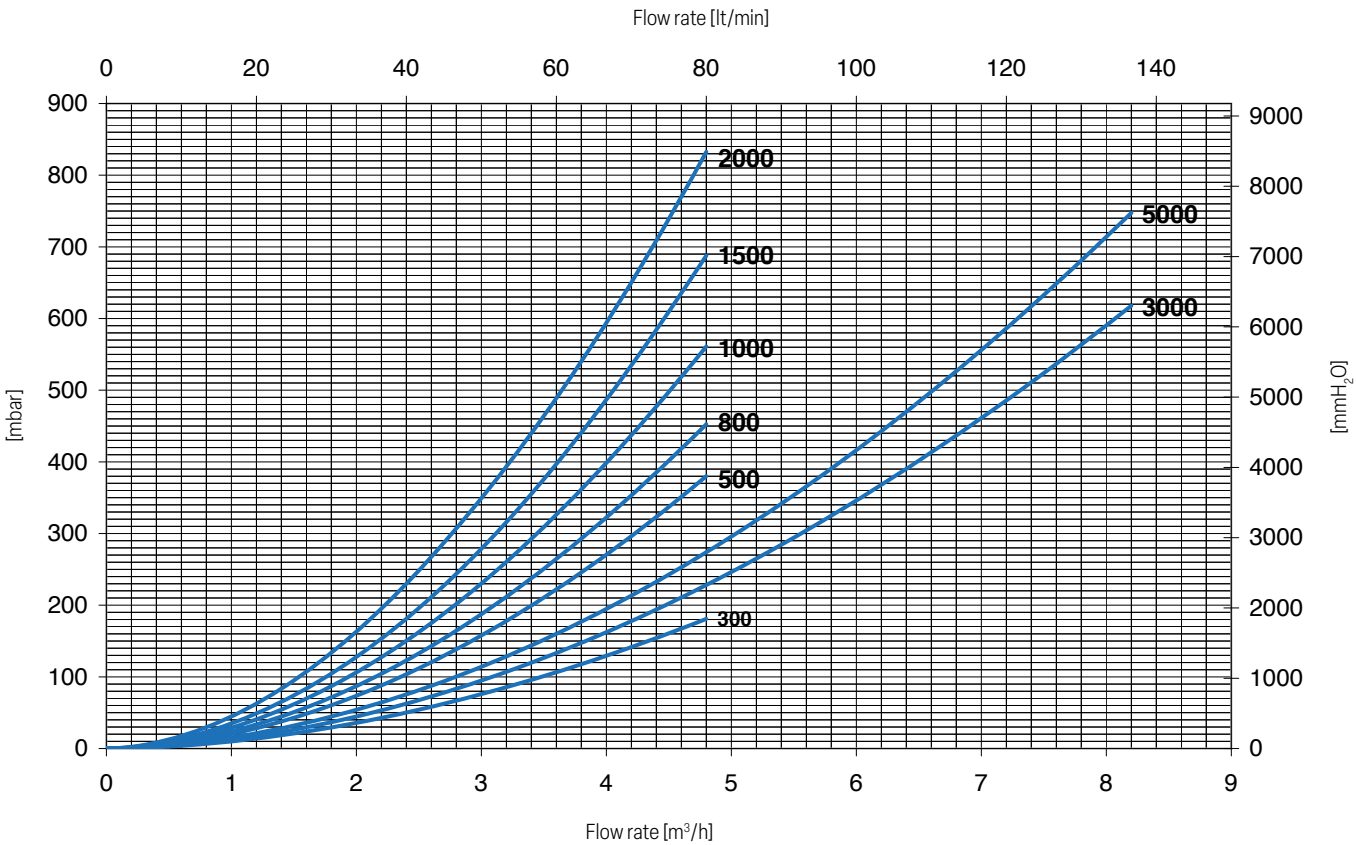

PUFFER **2**

UPPER HEAT EXCHANGER POWER



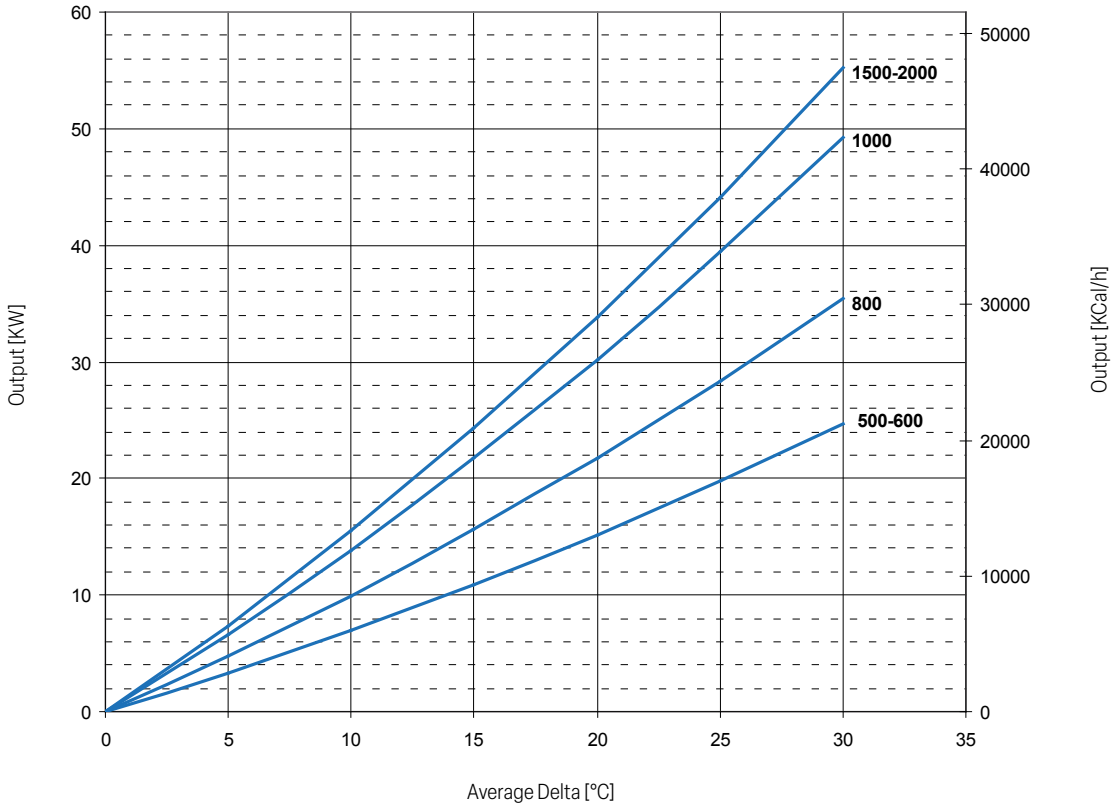

Output of the upper heat exchangers PUFFER 2 depending on the average DeltaT between primary and accumulation considering flow rate 3 m^3/h.

UPPER HEAT EXCHANGER PRESSURE DROP

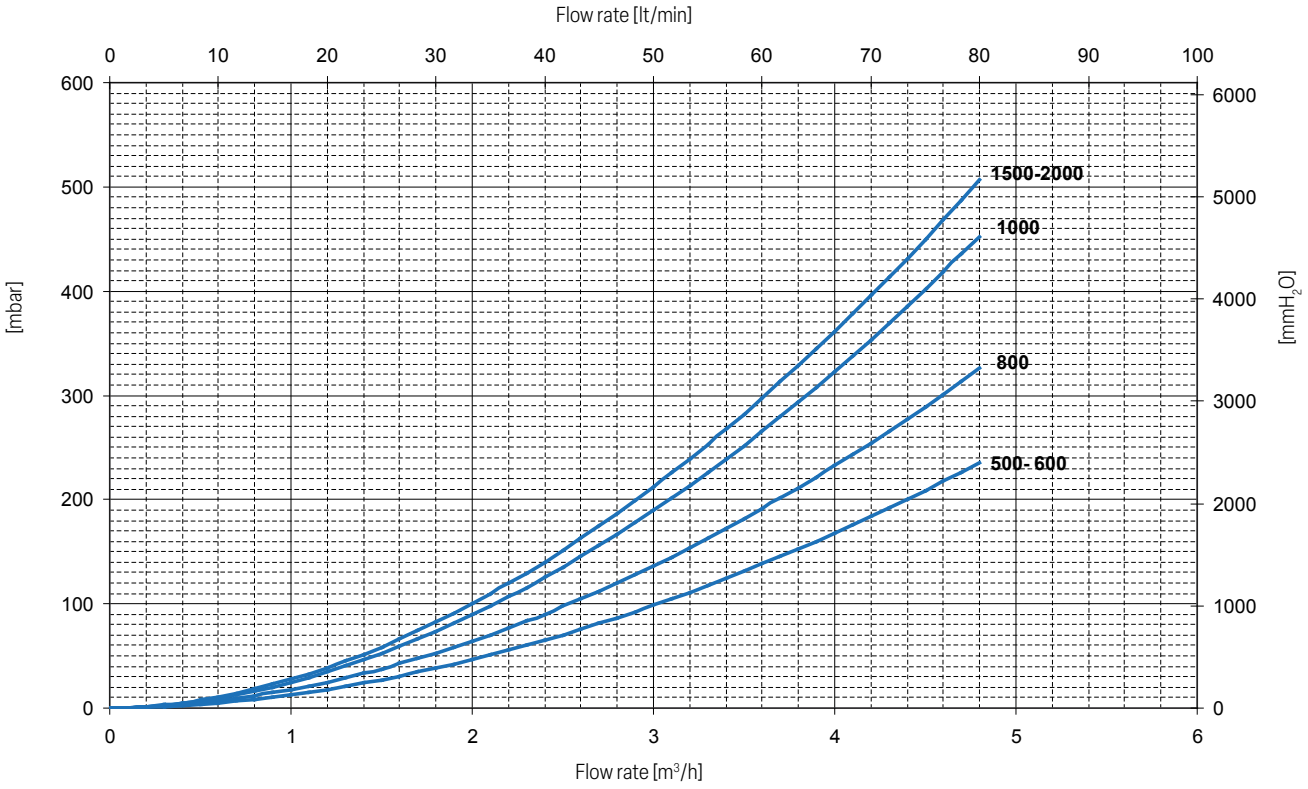

For lower exchanger power data see PUFFER 1

PUFFER 1 CTS®

STORAGE BUFFER TANKS FOR HEATING WATER WITH STRATIFICATION DEVICE AND 1 FIXED HEAT EXCHANGER



APPLICATION
Efficient storage of hot water for heating purpose.

MATERIAL
Mild steel painted on the outside. Buffer intented for closed circuit installation, so no anti-corrosion treatment is provided.

HEAT EXCHANGER
Nr. 1 mild steel fixed heat exchanger and CTS® stratificator system, suitable for solar thermal systems.

TECHNICAL DESCRIPTION
Used to improve flexibility of pellets, stoves and burners. PUFFER 1 CTS® are used in units with a typically discontinuous energy source such as biomass boiler and solar thermal systems.
PUFFER 1 CTS® is characterized by multiple stratification system based on the combination of Cordivari Labyrinth spreader for returning heating water with a new stratification device that conveys in the upper part of the tank the heated water up by the lower fixed exchanger. This combination ensures a perfect natural stratification inside the tank with no valve or additional external device.
The lower fixed exchanger can be connected with a solar system. Positioned at the bottom lower part of the buffer tank and with very small footprint, it increases the volume available for the storage.

INSULATION
High thermal insulation with ecological hard polyurethane foam.
Dismountable hard foam insulation available for 800-1000.
Grey PVC external lining.

WARRANTY
5 years (See general sales conditions and warranty)

ACCESSORIES AND SPARE PARTS
See Accessories section for the entire list.

	Model	Art. Nr.	Heat exchangers surface [m²]	ErP ENERGY EFFICIENCY CLASS
PUFFER 1 CTS® VB HARD FOAM INSULATION	500	3251162313002	1,9	C
	600	3251162313003	2,1	C
	800	3251162313014	2,5	B
	1000	3251162313015	3,1	C
	1500	3251162313006	3,8	C
	2000	3251162313007	4,6	B
PUFFER 1 CTS® VB DISMOUNTABLE HARD FOAM INSULATION	800	3251162313004	2,5	B
	1000	3251162313005	3,1	C

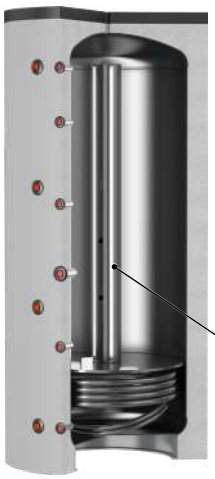

ACCESSORIES

Electric immersion heater



Available kit	
[Kw]	Tension [V]
from **1,5** to **3**	220 - MONOPHASE
from **4** to **12**	400 - THREEPHASE
See accessories	

Thermometer

Art. Nr.
5032240000107
5 units box



Buffer tanks connecting kit

Art. Nr.	Connection
5006170001001	1" 1/2
Stainless steel extensible connecting kit - (200 ÷ 400 mm)	



Products designed and manufactured for using within temperature and pressure limits in accordance to Art. 4.3 Directive 2014/68/EU (P.E.D.)

PUFFER 1 CTS®

STORAGE BUFFER TANKS FOR HEATING WATER WITH STRATIFICATION DEVICE AND 1 FIXED HEAT EXCHANGER

STORAGE		HEAT EXCHANGER	
Pmax	Tmax	Pmax	Tmax
4 bar	99 °C	12 bar	110 °C

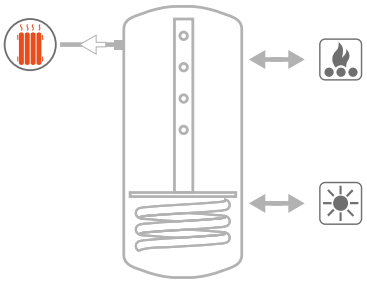

See TECHNICAL SUPPORT chapter for example of installation

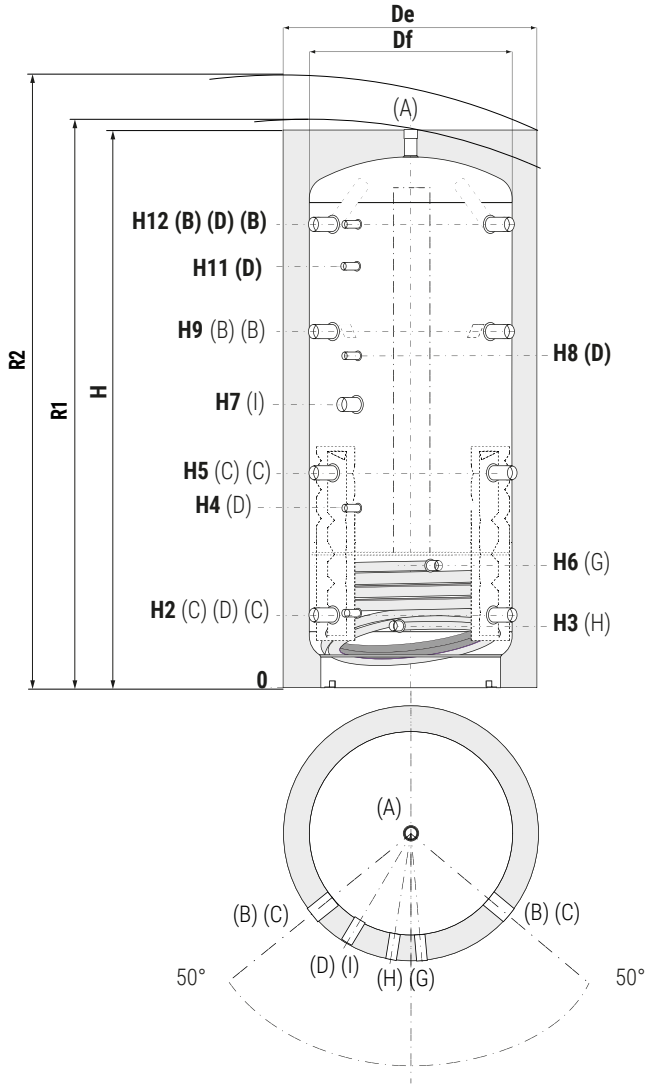

A	Heating delivery/from generator/Air purge G 1"1/2 F
B	Heating delivery/from generator G 1"1/2 F
C	Heating return/to generator G 1"1/2 F
D	Instrumentation G 1/2" F
G	Fixed heat exchanger inlet G 1" F
H	Fixed heat exchanger outlet G 1" F
I	Connection for electric immersion heater G 1"1/2 F

SUITABLE FOR SOLAR THERMAL SYSTEMS

THE ILLUSTRATION UNDERLINES THE STRATIFICATION PROCESS (FROM TOP TO BOTTOM) THAT ALLOWS TO HAVE ALL NEEDED ENERGY RAPIDLY AVAILABLE

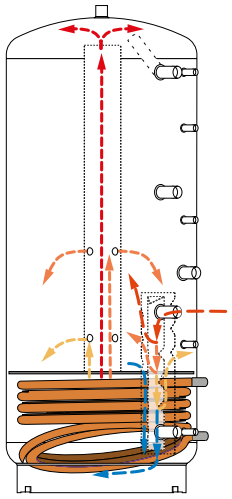

Model	Volume	De	Df	H	R1	R2	H2	H3	H4	H5	H7	H8	H9	H11	H12
	[lt]	[mm]													
500	478	750	//	1620	//	1790	247	215	533	629	841	940	1011	1231	1343
600	560	750	//	1870	//	2020	247	215	582	695	915	1060	1144	1382	1593
800	805	950	790	1840	1890	2075	265	233	584	690	823	988	1115	1332	1541
1000	946	950	790	2130	2175	2340	265	233	656	787	998	1188	1309	1588	1831
1500	1435	1100	//	2250	//	2510	313	281	736	845	1061	1286	1377	1653	1909
2000	1973	1300	//	2320	//	2665	347	315	770	879	1060	1300	1411	1687	1943

Net volume data according to EN 15332 available on product label.

Products designed and manufactured for using within temperature and pressure limits in accordance to Art. 4.3 Directive 2014/68/EU (P.E.D.)

COMBI 1

MULTI-HEAT ENERGY BUFFER WITH POLYWARM® COATED TANK IN TANK CALORIFIER FOR D.H.W.



APPLICATION
Heating hot water storage and D.H.W. production.
MATERIAL
Buffer tank: Mild steel painted on the outside. Buffer intented for closed circuit installation, so no anti-corrosion treatment is provided.
D.H.W. storage (W models): Mild steel Polywarm® coated (Attestation ACS - EN 16421)
D.H.W. storage (X models): Stainless steel 316L suitable for D.H.W.
TECHNICAL DESCRIPTION
Multi-Heat Energy tanks COMBI 1 are used in units with a typically discontinuous energy source for double use: heating systems and domestic hot water systems.

INSULATION
HARD: High thermal insulation with ecological polyurethane hard foam.
SOFT (DISMOUNTABLE): NOFIRE® polyester fleece 100% made of recyclable material, with high thermal insulation. Fire resistance class B-s2d0 according to EN 13501. Grey PVC external lining.
CATHODE PROTECTION
Chain magnesium anode
WARRANTY
5 years (See general sales conditions and warranty)
ACCESSORIES AND SPARE PARTS
See Accessories section for the entire list.






Dismountable insulation

PROMPT AVAILABILITY

POLYWARM®




COMBI 1 WB
HARD FOAM INSULATION



Model	Art. Nr.	D.H.W. Storage (POLYWARM®) Volume [lt]	Surface [m²]	ENERGY EFFICIENCY CLASS
500	3270162314001	99	1,1	C
600	3270162314002	146	1,3	C
800	3270162314003	191	1,6	B
1000	3270162314004	226	1,8	C
1500	3270162314005	412	2,5	C
2000	3270162314006	566	3,1	B




COMBI 1 WC
DISMOUNTABLE SOFT FLEECE INSULATION

Model	Art. Nr.	D.H.W. Storage (POLYWARM®) Volume [lt]	Surface [m²]	ENERGY EFFICIENCY CLASS
800	3270162284012	191	1,6	C
1000	3270162284013	226	1,8	C
1500	3270162284014	412	2,5	C
2000	3270162284015	566	3,1	C

316L STAINLESS STEEL




COMBI 1 XB
HARD FOAM INSULATION

Model	Art. Nr.	D.H.W. Storage (316L stainless steel) Volume [lt]	Surface [m²]	ENERGY EFFICIENCY CLASS
500	3270162314051	99	1,1	C
600	3270162314052	146	1,3	C




COMBI 1 XB
DISMOUNTABLE HARD FOAM INSULATION

Model	Art. Nr.	D.H.W. Storage (316L stainless steel) Volume [lt]	Surface [m²]	ENERGY EFFICIENCY CLASS
800	3270162314053	191	1,6	C
1000	3270162314054	226	1,8	C

ACCESSORIES

Chain magnesium anode (Connection 3/4")

Art. Nr.	For models
7200000041016	500,600
7200000041007	800÷2000
N° 2 chain anodes + insulated cap + gasket	

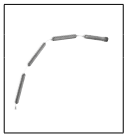

Thermometer

Art. Nr.
5032240000107
5 units box



Buffer tanks connecting kit

Art. Nr.	Connection
5006170001001	1" 1/2
Stainless steel extensible connecting kit - (200 ÷ 400 mm)	



Products designed and manufactured for using within temperature and pressure limits in accordance to Art. 4.3 Directive 2014/68/EU (P.E.D.)

COMBI 1

MULTI-HEAT ENERGY BUFFER WITH POLYWARM® COATED TANK IN TANK CALORIFIER FOR D.H.W.

TECHNICAL STORAGE		D.H.W. STORAGE	
Pmax	Tmax	Pmax	Tmax
4 bar	99 °C	6 bar	90 °C

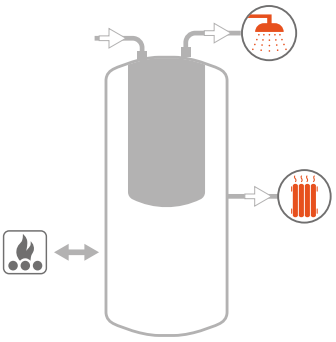

See TECHNICAL SUPPORT chapter for example of installation

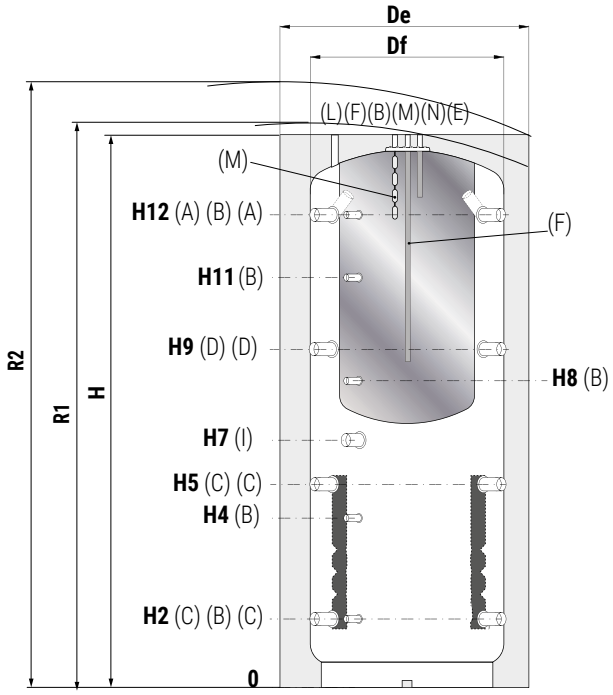

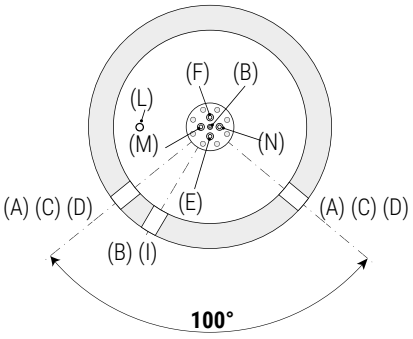

A	Heating delivery/from generator G 1"1/2 F
B	Connection for instrumentation G 1/2" F
C	Heating return/to generator G 1"1/2 F
D	Heating delivery G 1"1/2 F
E	Domestic hot water outlet G 3/4" F
F	Domestic cold water circuit inlet G 3/4" F
I	Connection for electric immersion heater G 1"1/2 F
L	Air purge G 1/2" F
M	Connection for magnesium anode G 3/4" F
N	Recirculation G 3/4" F



Dismountable insulation

COMBI 1 WB - HARD FOAM INSULATION

Model	Volume	Df	De	H	R1	R2	H2	H4	H5	H7	H8	H9	H11	H12
	[lt]							[mm]						
500	478	//	750	1670	//	1835	247	533	629	841	940	1011	1231	1343
600	560	//	750	1900	//	2070	247	582	695	915	1060	1144	1382	1593
800	805	790	950	1855	1900	2120	265	584	690	823	988	1115	1332	1541
1000	946	790	950	2150	2180	2380	265	656	787	998	1188	1309	1588	1831
1500	1454	//	1100	2280	//	2590	313	736	845	1061	1286	1377	1653	1909
2000	1973	//	1300	2345	//	2715	347	770	879	1060	1300	1411	1687	1943

Net volume data according to EN 15332 available on product label.

COMBI 1 WC - DISMOUNTABLE SOFT FLEECE INSULATION

Model	Volume	Df	De	H	R1	R2	H2	H4	H5	H7	H8	H9	H11	H12
	[lt]							[mm]						
800	805	790	1010	1855	1900	2090	265	584	690	823	988	1115	1332	1541
1000	946	790	1010	2150	2180	2355	265	656	787	998	1188	1309	1588	1831
1500	1454	950	1210	2280	2315	2540	313	736	845	1061	1286	1377	1653	1909
2000	1973	1100	1360	2345	2400	2690	347	770	879	1060	1300	1411	1687	1943

Net volume data according to EN 15332 available on product label.

Products designed and manufactured for using within temperature and pressure limits in accordance to Art. 4.3 Directive 2014/68/EU (P.E.D.)

COMBI 2

MULTI-HEAT ENERGY BUFFER WITH POLYWARM® COATED TANK IN TANK CALORIFIER FOR D.H.W. AND 1 FIXED HEAT EXCHANGER



APPLICATION
Heating hot water storage and D.H.W. production.

MATERIAL
Buffer tank: Mild steel painted on the outside. Buffer intented for closed circuit installation, so no anti-corrosion treatment is provided.
D.H.W. storage (W models): Mild steel Polywarm® coated (Attestation ACS - EN 16421)
D.H.W. storage (X models): Stainless steel 316L suitable for D.H.W.

HEAT EXCHANGER
Nr. 1 mild steel fixed heat exchanger.

TECHNICAL DESCRIPTION
Multi-Heat Energy tanks Combi 2 are used in units with a typically discontinuous energy source for double use: heating systems and domestic hot water systems.

INSULATION
HARD: High thermal insulation with ecological polyurethane hard foam.
SOFT (DISMOUNTABLE): NOFIRE® polyester fleece 100% made of recyclable material, with high thermal insulation. Fire resistance class B-s2d0 according to EN 13501. Grey PVC external lining.

CATHODE PROTECTION
Chain magnesium anode

WARRANTY
5 years (See general sales conditions and warranty)

ACCESSORIES AND SPARE PARTS
See Accessories section for the entire list.

POLYWARM® COATED DHW STORAGE

316L STAINLESS STEEL DHW STORAGE

Dismountable insulation

PROMPT AVAILABILITY

POLYWARM®	Model	Art. Nr.	D.H.W. Storage (POLYWARM®) Volume [lt]	D.H.W. Storage (POLYWARM®) Surface [m²]	Heat exchangers Volume [lt]	Heat exchangers Surface [m²]	ErP ENERGY EFFICIENCY CLASS
COMBI 2 WB HARD FOAM INSULATION	500	3270162314101	99	1,1	11,5	1,9	C
	600	3270162314102	146	1,3	18	2,8	C
	800	3270162314103	191	1,6	20	3,1	B
	1000	3270162314104	226	1,8	24	3,7	C
	1500	3270162314105	412	2,5	32	4,9	C
	2000	3270162314106	566	3,1	35	5,4	B
COMBI 2 WC DISMOUNTABLE SOFT FLEECE INSULATION	800	3270162284112	191	1,6	20	3,1	C
	1000	3270162284113	226	1,8	24	3,7	C
	1500	3270162284114	412	2,5	32	4,9	C
	2000	3270162284115	566	3,1	35	5,4	C

316L STAINLESS STEEL	Model	Art. Nr.	D.H.W. Storage (316L stainless steel) Volume [lt]	D.H.W. Storage (316L stainless steel) Surface [m²]	Heat exchangers Volume [lt]	Heat exchangers Surface [m²]	ErP ENERGY EFFICIENCY CLASS
COMBI 2 XB HARD FOAM INSULATION	500	3270162314151	99	1,1	11,5	1,9	C
	600	3270162314152	146	1,3	18	2,8	C
COMBI 2 XB DISMOUNTABLE HARD FOAM INSULATION	800	3270162314153	191	1,6	20	3,1	C
	1000	3270162314154	226	1,8	24	3,7	C

ACCESSORIES

Chain magnesium anode (Connection 3/4")

Art. Nr.	For models
7200000041016	500,600
7200000041007	800÷2000
N° 2 chain anodes + insulated cap + gasket	

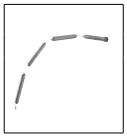

Thermometer

Art. Nr.
5032240000107
5 units box



Buffer tanks connecting kit

Art. Nr.	Connection
5006170001001	1" 1/2
Stainless steel extensible connecting kit - (200 ÷ 400 mm)	



Products designed and manufactured for using within temperature and pressure limits in accordance to Art. 4.3 Directive 2014/68/EU (P.E.D.)

COMBI 2

MULTI-HEAT ENERGY BUFFER
WITH POLYWARM® COATED TANK IN TANK CALORIFIER FOR D.H.W. AND 1 FIXED HEAT EXCHANGER

TECHNICAL STORAGE		D.H.W. STORAGE		FIXED HEAT EXCHANGER	
Pmax	Tmax	Pmax	Tmax	Pmax	Tmax
4 bar	99 °C	6 bar	90 °C	12 bar	110 °C

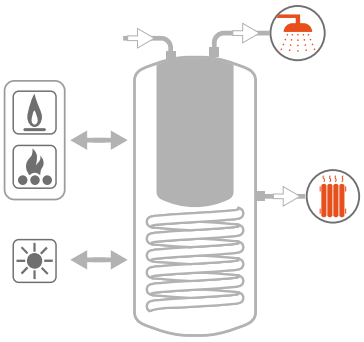

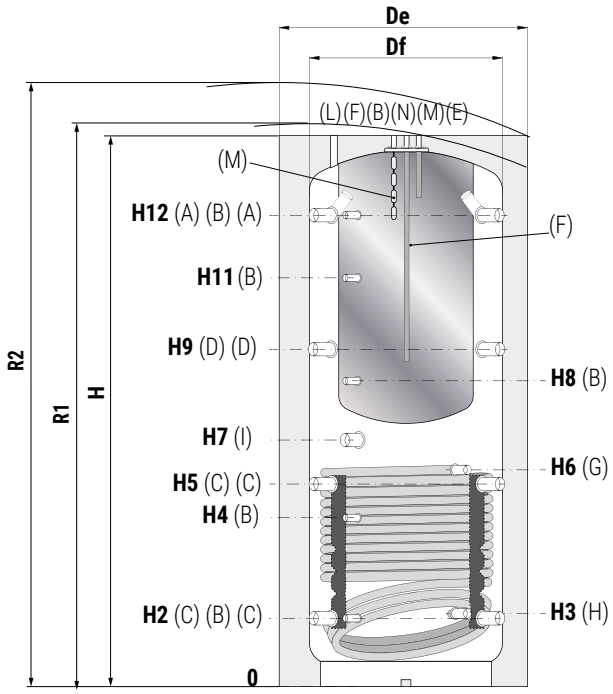

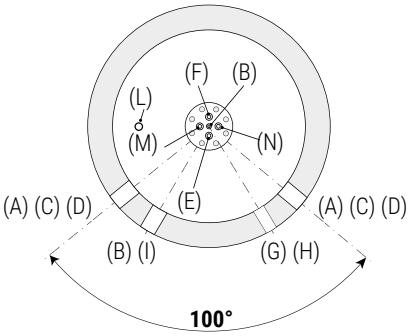

A	Heating delivery/from generator G 1"1/2 F
B	Connection for instrumentation G 1/2" F
C	Heating return/to generator G 1"1/2 F
D	Heating delivery G 1"1/2 F
E	Domestic hot water outlet G 3/4" F
F	Domestic cold water circuit inlet G 3/4" F
G	Fixed heat exchanger inlet G 1" F
H	Fixed heat exchanger outlet G 1" F
I	Connection for electric immersion heater G 1"1/2 F
L	Air purge G 1/2" F
M	Connection for magnesium anode G 3/4" F
N	Recirculation G 3/4" F



Dismountable insulation

COMBI 2 WB - HARD FOAM INSULATION

Model	Volume	Df	De	H	R1	R2	H2	H3	H4	H5	H6	H7	H8	H9	H11	H12
	[lt]								[mm]							
500	478	//	750	1670	//	1835	247	260	533	629	744	841	940	1011	1231	1343
600	560	//	750	1900	//	2070	247	260	582	695	855	915	1060	1144	1382	1593
800	805	790	950	1855	1900	2120	265	278	584	690	762	823	988	1115	1332	1541
1000	946	790	950	2150	2180	2380	265	284	656	787	953	998	1188	1309	1588	1831
1500	1454	//	1100	2280	//	2590	313	336	736	845	1006	1061	1286	1377	1653	1909
2000	1973	//	1300	2345	//	2715	347	370	770	879	1001	1060	1300	1411	1687	1943

Net volume data according to EN 15332 available on product label.

COMBI 2 WC - DISMOUNTABLE SOFT FLEECE INSULATION

Model	Volume	Df	De	H	R1	R2	H2	H3	H4	H5	H6	H7	H8	H9	H11	H12
	[lt]								[mm]							
800	805	790	1010	1855	1900	2090	265	278	584	690	762	823	988	1115	1332	1541
1000	946	790	1010	2150	2180	2355	265	284	656	787	953	998	1188	1309	1588	1831
1500	1454	950	1210	2280	2315	2540	313	336	736	845	1006	1061	1286	1377	1653	1909
2000	1973	1100	1360	2345	2400	2690	347	370	770	879	1001	1060	1300	1411	1687	1943

Net volume data according to EN 15332 available on product label.

Products designed and manufactured for using within temperature and pressure limits in accordance to Art. 4.3 Directive 2014/68/EU (P.E.D.)

COMBI 3

MULTI-HEAT ENERGY BUFFER WITH POLYWARM® COATED TANK IN TANK CALORIFIER FOR D.H.W. AND 2 FIXED HEAT EXCHANGERS



APPLICATION
Heating hot water storage and D.H.W. production.
MATERIAL
Buffer tank: Mild steel painted on the outside. Buffer intented for closed circuit installation, so no anti-corrosion treatment is provided.
D.H.W. storage (W models): Mild steel Polywarm® coated (Attestation ACS - EN 16421)
D.H.W. storage (X models): Stainless steel 316L suitable for D.H.W.
HEAT EXCHANGER:
Nr. 2 mild steel fixed heat exchangers.
TECHNICAL DESCRIPTION
Multi-Heat Energy tanks Combi 3 are used in units with a typically discontinuous energy source for double use: heating systems and domestic hot water systems.

INSULATION
HARD: High thermal insulation with ecological polyurethane hard foam.
SOFT (DISMOUNTABLE): NOFIRE® polyester fleece 100% made of recyclable material, with high thermal insulation. Fire resistance class B-s2d0 according to EN 13501. Grey PVC external lining.
CATHODE PROTECTION
Chain magnesium anode
WARRANTY
5 years (See general sales conditions and warranty)
ACCESSORIES AND SPARE PARTS
See Accessories section for the entire list.


POLYWARM® COATED DHW STORAGE


316L STAINLESS STEEL DHW STORAGE


Dismountable insulation

PROMPT AVAILABILITY

POLYWARM®	Model	Art. Nr.	D.H.W. Storage (POLYWARM®) Volume [lt]	D.H.W. Storage (POLYWARM®) Surface [m²]	UPPER heat exchanger Volume [lt]	UPPER heat exchanger Surface [m²]	Lower heat exchanger Volume [lt]	Lower heat exchanger Surface [m²]	ErP ENERGY EFFICIENCY CLASS
COMBI 3 WB HARD FOAM INSULATION	500	3270162314201	99	1,1	8	1,3	11,5	1,9	C
	600	3270162314202	146	1,3	12	1,9	18	2,8	C
	800	3270162314203	191	1,6	16	2,4	20	3,1	B
	1000	3270162314204	226	1,8	20	3,1	24	3,7	C
	1500	3270162314205	412	2,5	23	3,5	32	4,9	C
	2000	3270162314206	566	3,1	27	4,1	35	5,4	B
COMBI 3 WC DISMOUNTABLE SOFT FLEECE INSULATION	800	3270162284212	191	1,6	16	2,4	20	3,1	C
	1000	3270162284213	226	1,8	20	3,1	24	3,7	C
	1500	3270162284214	412	2,5	23	3,5	32	4,9	C
	2000	3270162284215	566	3,1	27	4,1	35	5,4	C

316L STAINLESS STEEL	Model	Art. Nr.	D.H.W. Storage (316L stainless steel) Volume [lt]	D.H.W. Storage (316L stainless steel) Surface [m²]	UPPER heat exchanger Volume [lt]	UPPER heat exchanger Surface [m²]	Lower heat exchanger Volume [lt]	Lower heat exchanger Surface [m²]	ErP ENERGY EFFICIENCY CLASS
COMBI 3 XB HARD FOAM INSULATION	500	3270162314251	99	1,1	8	1,3	11,5	1,9	C
	600	3270162314252	146	1,3	12	1,9	18	2,8	C
COMBI 3 XB DISMOUNTABLE HARD FOAM INSULATION	800	3270162314253	191	1,6	16	2,4	20	3,1	C
	1000	3270162314254	226	1,8	20	3,1	24	3,7	C

ACCESSORIES

Chain magnesium anode (Connection 3/4")

Art. Nr.	For models
7200000041016	500,600
7200000041007	800÷2000
N° 2 chain anodes + insulated cap + gasket	

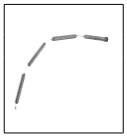

Thermometer

Art. Nr.
5032240000107
5 units box



Buffer tanks connecting kit

Art. Nr.	Connection
5006170001001	1" 1/2
Stainless steel extensible connecting kit - (200 ÷ 400 mm)	



Products designed and manufactured for using within temperature and pressure limits in accordance to Art. 4.3 Directive 2014/68/EU (P.E.D.)

COMBI 3

MULTI-HEAT ENERGY BUFFER WITH POLYWARM® COATED TANK IN TANK CALORIFIER FOR D.H.W. AND 2 FIXED HEAT EXCHANGERS

TECHNICAL STORAGE		D.H.W. STORAGE		FIXED HEAT EXCHANGER	
Pmax	Tmax	Pmax	Tmax	Pmax	Tmax
4 bar	99 °C	6 bar	90 °C	12 bar	110 °C

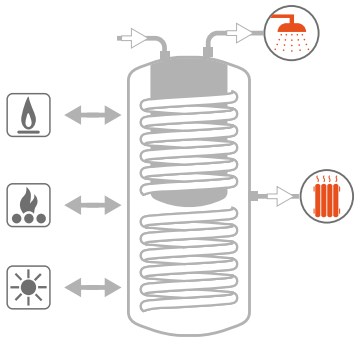

See TECHNICAL SUPPORT chapter for example of installation

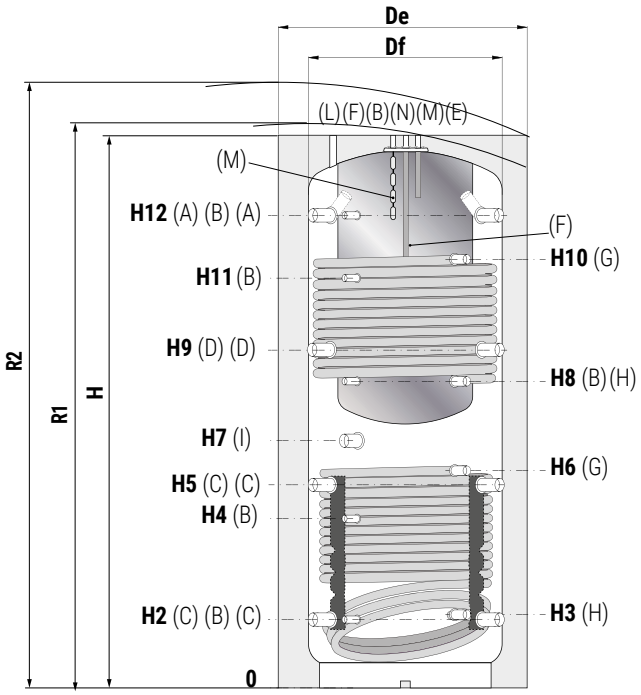

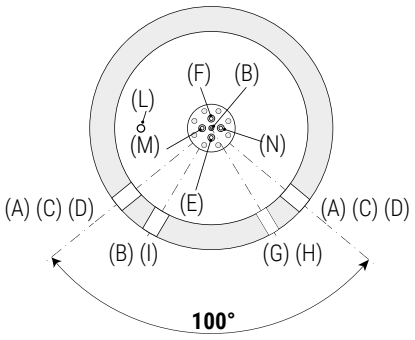

A	Heating delivery/from generator G 1"1/2 F
B	Connection for instrumentation G 1/2" F
C	Heating return/to generator G 1"1/2 F
D	Heating delivery G 1"1/2 F
E	Domestic hot water outlet G 3/4" F
F	Domestic cold water circuit inlet G 3/4" F
G	Fixed heat exchanger inlet G 1" F
H	Fixed heat exchanger outlet G 1" F
I	Connection for electric immersion heater G 1"1/2 F
L	Air purge G 1/2" F
M	Connection for magnesium anode G 3/4" F
N	Recirculation G 3/4" F



Dismountable insulation

COMBI 3 WB - HARD FOAM INSULATION

Model	Volume	Df	De	H	R1	R2	H2	H3	H4	H5	H6	H7	H8	H9	H10	H11	H12
	[lt]	[mm]															
500	478	//	750	1670	//	1835	247	260	533	629	744	841	930	1011	1231	1231	1343
600	560	//	750	1900	//	2070	247	260	582	695	855	915	1060	1144	1500	1382	1593
800	805	790	950	1855	1900	2120	265	278	584	690	762	823	988	1115	1428	1332	1541
1000	946	790	950	2150	2180	2380	265	284	656	787	953	998	1188	1309	1748	1588	1831
1500	1454	//	1100	2280	//	2590	313	336	736	845	1006	1061	1286	1377	1805	1653	1909
2000	1973	//	1300	2345	//	2715	347	370	770	879	1001	1060	1300	1411	1820	1687	1943

Net volume data according to EN 15332 available on product label.

COMBI 3 WC - DISMOUNTABLE SOFT FLEECE INSULATION

Model	Volume	Df	De	H	R1	R2	H2	H3	H4	H5	H6	H7	H8	H9	H10	H11	H12
	[lt]	[mm]															
800	805	790	1010	1855	1900	2090	265	278	584	690	762	823	988	1115	1428	1332	1541
1000	946	790	1010	2150	2180	2355	265	284	656	787	953	998	1188	1309	1748	1588	1831
1500	1454	950	1210	2280	2315	2540	313	336	736	845	1006	1061	1286	1377	1805	1653	1909
2000	1973	1100	1360	2345	2400	2690	347	370	770	879	1001	1060	1300	1411	1820	1687	1943

Net volume data according to EN 15332 available on product label.

Products designed and manufactured for using within temperature and pressure limits in accordance to Art. 4.3 Directive 2014/68/EU (P.E.D.)

COMBI

D.H.W. STORAGE PERFORMANCES



Model	DHW Volume	DHW exchanger surface	COMPLETE HEATED STORAGE VOLUME		UPPER PART HEATED STORAGE VOLUME	
			Max flowrate of sanitary water sustained from 10°C to 45°C with storage at 65°C and boiler on	Max sanitary water produced from 10°C to 45°C with storage at 65°C and boiler off	Max flowrate of sanitary water sustained from 10°C to 45°C with storage at 65°C and boiler on	Max sanitary water produced from 10°C to 45°C with storage at 65°C and boiler off
	[lt]	[m²]	[lt/min]	[lt]	[lt/min]	[lt]
500	99	1,1	2,5	10 lt/min: 198 lt 25 lt/min: 176 lt	1,57	10 lt/min: 148 lt 25 lt/min: 132 lt
600	146	1,3	3,0	10 lt/min: 239 lt 25 lt/min: 213 lt	1,86	10 lt/min: 179 lt 25 lt/min: 160 lt
800	191	1,6	3,5	10 lt/min: 320 lt 25 lt/min: 280 lt	2,17	10 lt/min: 240 lt 25 lt/min: 210 lt

LOWER HEAT EXCHANGER POWER COMBI 2 - COMBI 3

Output of the Combi 2 - Combi 3 lower heat exchangers depending on the average DeltaT between primary and accumulation considering flow rate 3 m³/h.

Thermal output is given in both kW or kcal/h in terms of average temperature difference between primary and secondary circuit, all for a range of primary 3 m³/h.
For example, a 1000 liters COMBI 2 with a water flow of 3 m³/h at 80 °C inlet and outlet at 70 °C, has on the storage of water an average temperature of 60 °C, the main difference of temperature will be:
(80 +70) / 20-60 = 15 °C and therefore you can exchange up to approximately 32 kW.

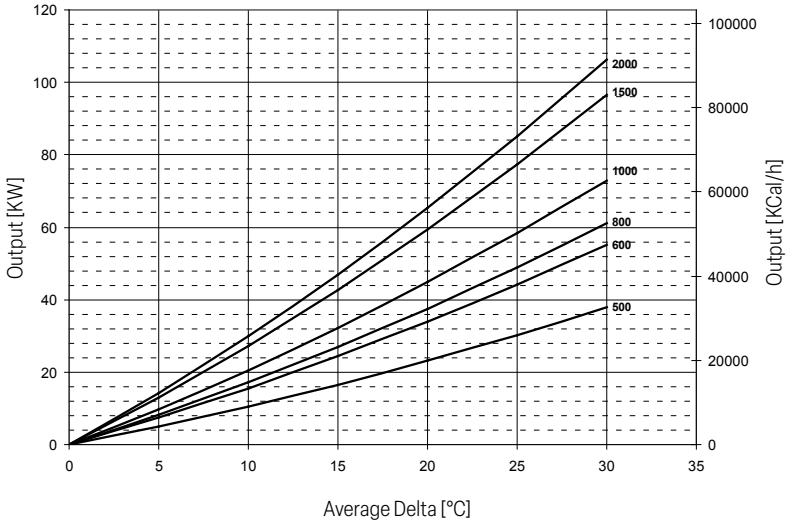

UPPER HEAT EXCHANGER POWER COMBI 3

Output of the Combi 3 upper heat exchangers depending on the average DeltaT between primary and accumulation considering flow rate 3 m³/h.

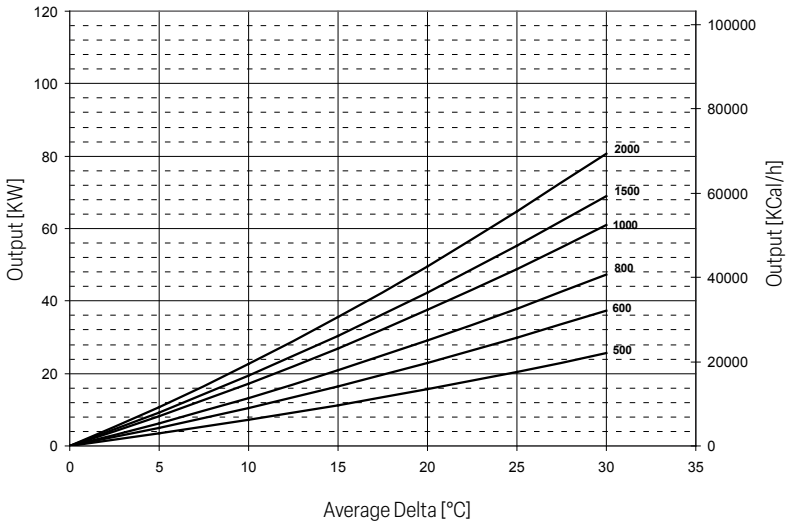



Model	DHW Volume	DHW exchanger surface	COMPLETE HEATED STORAGE VOLUME		UPPER PART HEATED STORAGE VOLUME	
			Max flowrate of sanitary water sustained from 10°C to 45°C with storage at 65°C and boiler on	Max sanitary water produced from 10°C to 45°C with storage at 65°C and boiler off	Max flowrate of sanitary water sustained from 10°C to 45°C with storage at 65°C and boiler on	Max sanitary water produced from 10°C to 45°C with storage at 65°C and boiler off
	[lt]	[m²]	[lt/min]	[lt]	[lt/min]	[lt]
1000	226	1,8	4,1	10 lt/min: 389 lt 25 lt/min: 330 lt	2,26	10 lt/min: 291 lt 25 lt/min: 250 lt
1500	412	2,5	5,6	10 lt/min: 753 lt 25 lt/min: 614 lt	3,36	10 lt/min: 565 lt 25 lt/min: 461 lt
2000	566	3,1	6,8	10 lt/min: 1083 lt 25 lt/min: 852 lt	4,08	10 lt/min: 812 lt 25 lt/min: 639 lt

LOWER HEAT EXCHANGER PRESSURE DROP COMBI 2 - COMBI 3

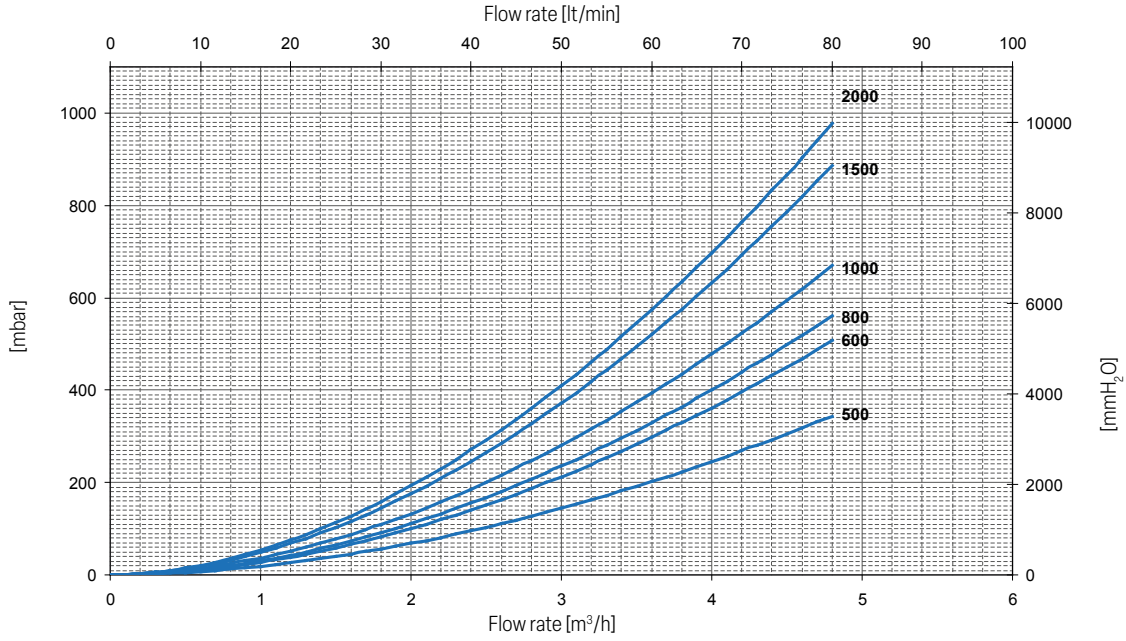

UPPER HEAT EXCHANGER PRESSURE DROP COMBI 3

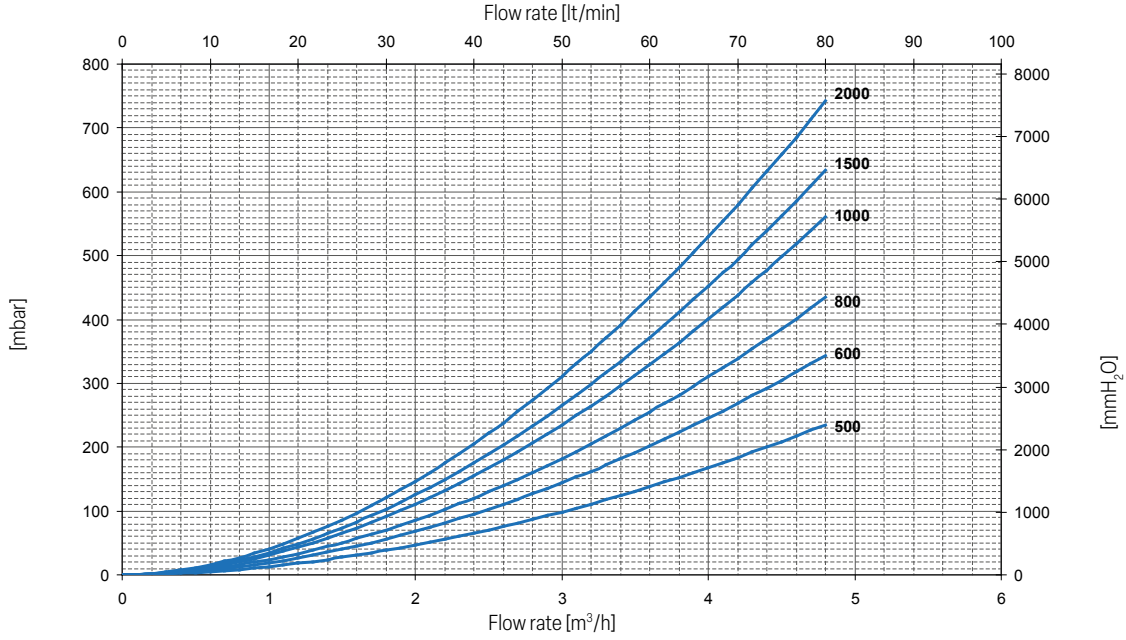

ECO-COMBI 1

MULTI-HEAT ENERGY BUFFER WITH STAINLESS STEEL 316L D.H.W. CORRUGATED COIL



APPLICATION
Heating hot water storage and rapid D.H.W. production.

MATERIAL
- ***BUFFER TANK:*** Mild steel painted on the outside. Buffer intented for closed circuit installation, so no anti-corrosion treatment is provided.
- ***D.H.W. STORAGE :*** Stainless steel 316L corrugated coil, suitable for D.H.W. according to D. M. n. 174 dated 06.04.04

TECHNICAL DESCRIPTION
- Thermal storage, combining the possibility to produce hot water for sanitary use. In such case , storage heating volume allows the generator to regularly work , limiting number of stops due to the inadequate energy request of the heating system. Moreover, it limits the emission of smoke and the creation of corrosive condensate (smoke side).
- Domestic hot water production system for domestic and sanitary use where heating water is stored. In this system, the high potentiality of the Eco Combi allows to obtain a good production of hot sanitary water even if temperatures of the primary system are not so high (i.e using heat pumps as primary source and solar source as support)

The particular shape of the corrugated coil is avoiding any problem relating to the storage of domestic hot water and ensure high heat exchange performances.

INSULATION
HARD: High thermal insulation with ecological polyurethane hard foam. Models 800-1000 available with dismountable hard foam insulation.
SOFT (DISMOUNTABLE): NOFIRE® polyester fleece 100% made of recyclable material, with high thermal insulation. Fire resistance class B-s2d0 according to EN 13501. Grey PVC external lining.

WARRANTY
5 years (See general sales conditions and warranty)

ACCESSORIES AND SPARE PARTS
See Accessories section for the entire list.

316L STAINLESS STEEL DH.W. CORRUGATED COIL

Dismountable insulation

PROMPT AVAILABILITY

		Model	Art. Nr.	316L stainless steel corrugated coil for D.H.W. production		ErP ENERGY EFFICIENCY CLASS
				Volume [lt]	Surface [m²]	
  **ECO-COMBI 1 VB** HARD FOAM INSULATION		**500**	3270162316010	26,6	4,5	**C**
		600	3270162316011	31,0	5,3	**C**
		800	3270162316012	33,4	5,8	**B**
		1000	3270162316013	45,5	7,8	**C**
		1250	3270162316014	45,5	7,8	**B**
		1500	3270162316015	55,3	9,5	**C**
		2000	3270162316016	72,2	12,3	**B**
  **ECO-COMBI 1 VC** DISMOUNTABLE SOFT FLEECE INSULATION		**800**	3270162282262	33,4	5,8	**C**
		1000	3270162282263	45,5	7,8	**C**
		1250	3270162282264	45,5	7,8	**C**
		1500	3270162282265	55,3	9,5	**C**
		2000	3270162282266	72,2	12,3	**C**

ACCESSORIES

Electric immersion heater



Available kit	
[Kw]	Tension [V]
from **1,5** to **3**	220 - MONOPHASE
from **4** to **9**	400 - THREEPHASE
See accessories	

Thermometer

Art. Nr.
5032240000107
5 units box



Buffer tanks connecting kit

Art. Nr.	Connection
5006170001001	1" 1/2
Stainless steel extensible connecting kit - (200 ÷ 400 mm)	



Products designed and manufactured for using within temperature and pressure limits in accordance to Art. 4.3 Directive 2014/68/EU (P.E.D.)

ECO-COMBI 1

MULTI-HEAT ENERGY BUFFER WITH STAINLESS STEEL 316L D.H.W. CORRUGATED COIL

STORAGE		CORRUGATED DHW STAINLESS STEEL 316L COIL
Pmax	Tmax	Pmax
4 bar	99 °C	6 bar

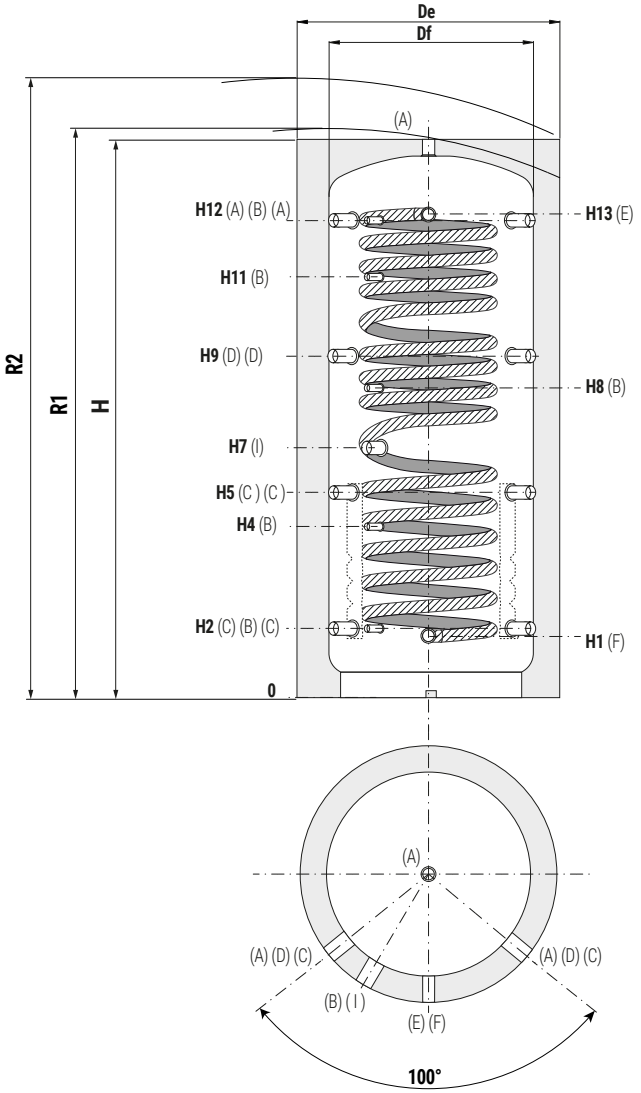

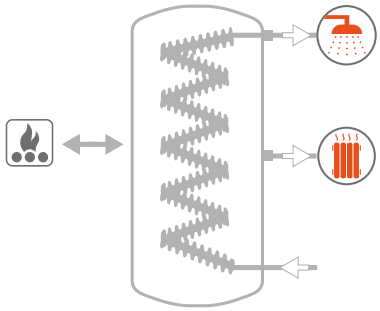

A	Heating delivery/from generator/Air purge G 1"1/2 F
B	Instrumentation G 1/2" F
C	Heating return/to generator
D	Heating delivery/from generator G 1"1/2 F
E	Domestic hot water outlet G 1"
F	Domestic cold water circuit inlet G 1" M
I	Connection for electric immersion heater G 1"1/2 F



ECO-COMBI 1 VB - HARD FOAM INSULATION

Model	Volume	Df	De	H	R1	R2	H1	H2	H4	H5	H7	H8	H9	H11	H12	H13
	[lt]								[mm]							
500	478	//	750	1620	//	1800	230	247	533	629	841	940	1011	1231	1343	1360
600	560	//	750	1870	//	2025	230	247	582	695	915	1060	1144	1382	1593	1610
800	803	790	940	1840	1895	2070	248	265	584	690	823	988	1115	1332	1541	1558
1000	944	790	940	2130	2180	2340	248	265	656	787	998	1188	1309	1588	1831	1843
1250	1248	//	1100	2202	//	2475	296	313	705	835	986	1068	1357	1586	1879	1896
1500	1432	//	1100	2250	//	2505	296	313	736	845	1061	1286	1377	1653	1909	1921
2000	1970	//	1300	2320	//	2670	330	347	770	879	1060	1300	1411	1687	1943	1955

Net volume data according to EN 15332 available on product label.

ECO-COMBI 1 VC - DISMOUNTABLE SOFT FLEECE INSULATION

Model	Volume	Df	De	H	R1	R2	H1	H2	H4	H5	H7	H8	H9	H11	H12	H13
	[lt]								[mm]							
800	803	790	1010	1840	1895	2100	248	265	584	690	823	988	1115	1332	1541	1558
1000	944	790	1010	2130	2180	2370	248	265	656	787	998	1188	1309	1588	1831	1843
1250	1248	900	1120	2202	2262	2475	296	313	705	835	986	1068	1357	1586	1879	1896
1500	1432	950	1210	2250	2315	2565	296	313	736	845	1061	1286	1377	1653	1909	1921
2000	1970	1100	1360	2320	2400	2700	330	347	770	879	1060	1300	1411	1687	1943	1955

Net volume data according to EN 15332 available on product label.

Products designed and manufactured for using within temperature and pressure limits in accordance to Art. 4.3 Directive 2014/68/EU (P.E.D.)

ECO-COMBI 2

MULTI-HEAT ENERGY BUFFER WITH STAINLESS STEEL 316L D.H.W. CORRUGATED COIL AND 1 FIXED HEAT EXCHANGER



APPLICATION
Heating hot water storage and rapid D.H.W. production.

MATERIAL
- ***BUFFER TANK:*** Mild steel painted on the outside. Buffer intented for closed circuit installation, so no anti-corrosion treatment is provided.
- ***D.H.W. STORAGE :*** Stainless steel 316L corrugated coil, suitable for D.H.W. according to D. M. n. 174 dated 06.04.04

HEAT EXCHANGER
Nr. 1 mild steel fixed heat exchanger.

TECHNICAL DESCRIPTION
Multi-Heat Energy tanks EcoCombi 2 are used in units with a typically discontinuous energy source for double use: heating system and sanitary hot water system.
- Thermal storage, combining the possibility to produce hot water for sanitary use. In such case , storage heating volume allows the generator to regularly work , limiting number of stops due to the inadequate energy request of the heating system. Moreover, it limits the emission of smoke and the creation of corrosive condensate (smoke side).
- Domestic hot water production system for domestic and sanitary use where heating water is stored. In this system , the high potentiality of the Eco Combi allows to obtain a good production of hot sanitary water even if temperatures of the primary system are not so high (i.e using heat pumps as primary source and solar source as support).

The particular shape of the corrugated coil is avoiding any problem relating to the storage of domestic hot water and ensure high heat exchange performances.

INSULATION
HARD: High thermal insulation with ecological polyurethane hard foam. Models 800-1000 available with dismountable hard foam insulation.
SOFT (DISMOUNTABLE): NOFIRE® polyester fleece 100% made of recyclable material, with high thermal insulation. Fire resistance class B-s2d0 according to EN 13501. Grey PVC external lining.

WARRANTY
5 years (See general sales conditions and warranty)

ACCESSORIES AND SPARE PARTS
See Accessories section for the entire list.





Dismountable insulation

PROMPT AVAILABILITY

		Model	Art. Nr.	316L stainless steel corrugated coil for D.H.W. production		Lower heat exchanger		ErP
				Volume [lt]	Surface [m²]	Volume [lt]	Surface [m²]	ENERGY EFFICIENCY CLASS
 	**ECO-COMBI 2 WB** HARD FOAM INSULATION	**500**	3270162316101	26,6	4,5	11,5	1,9	**C**
		600	3270162316102	31,0	5,3	13	2,1	**C**
		800	3270162316103	33,4	5,8	16,3	2,5	**B**
		1000	3270162316104	45,5	7,8	20,7	3,1	**C**
		1250	3270162316105	45,5	7,8	22,3	3,4	**B**
		1500	3270162316106	55,3	9,5	25,3	3,8	**C**
		2000	3270162316107	72,2	12,3	29,6	4,6	**B**
 	**ECO-COMBI 2 WC** DISMOUNTABLE SOFT FLEECE INSULATION	**800**	3270162282272	33,4	5,8	16,3	2,5	**C**
		1000	3270162282273	45,5	7,8	20,7	3,1	**C**
		1250	3270162282274	45,5	7,8	22,3	3,4	**C**
		1500	3270162282275	55,3	9,5	25,3	3,8	**C**
		2000	3270162282276	72,2	12,3	29,6	4,6	**C**

ACCESSORIES

Electric immersion heater



Available kit	
[Kw]	Tension [V]
from **1,5** to **3**	220 - MONOPHASE
from **4** to **9**	400 - THREEPHASE
See accessories	

Thermometer

Art. Nr.
5032240000107
5 units box



Buffer tanks connecting kit

Art. Nr.	Connection
5006170001001	1" 1/2
Stainless steel extensible connecting kit - (200 ÷ 400 mm)	



Products designed and manufactured for using within temperature and pressure limits in accordance to Art. 4.3 Directive 2014/68/EU (P.E.D.)

ECO-COMBI 2

MULTI-HEAT ENERGY BUFFER WITH STAINLESS STEEL 316L D.H.W. CORRUGATED COIL AND 1 FIXED HEAT EXCHANGER

STORAGE		CORRUGATED DHW STAINLESS STEEL COIL	FIXED HEAT EXCHANGER	
Pmax	Tmax	Pmax	Pmax	Tmax
4 bar	99 °C	6 bar	12 bar	110 °C

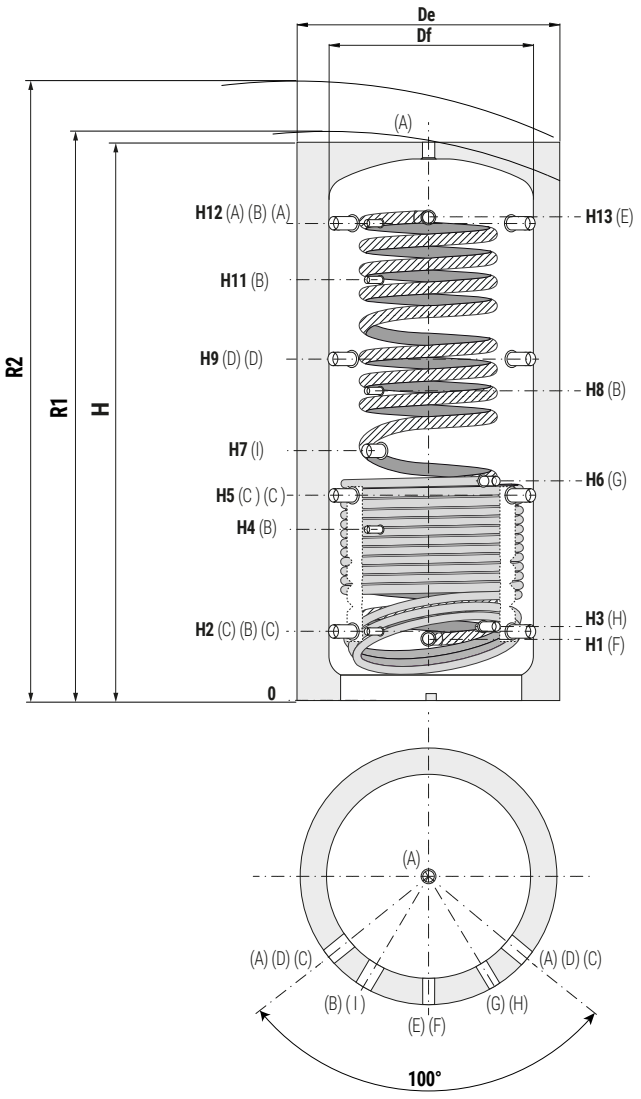

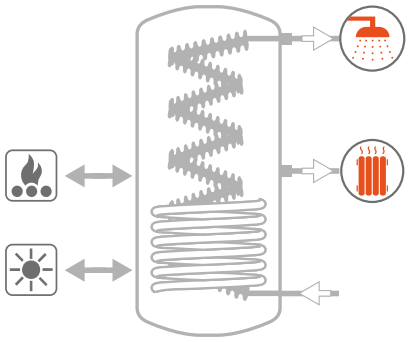

See TECHNICAL SUPPORT chapter for example of installation

A	Heating delivery/from generator/Air purge G 1"1/2 F
B	Instrumentation G 1/2" F
C	Heating return/to generator
D	Heating delivery/from generator G 1"1/2 F
E	Domestic hot water outlet G 1"
F	Domestic cold water circuit inlet G 1" M
G	Fixed heat exchanger inlet G 1" F
H	Fixed heat exchanger outlet G 1" F
I	Connection for electric immersion heater G 1"1/2 F

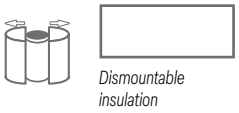

Dismountable insulation

ECO-COMBI 2 VB - HARD FOAM INSULATION

Model	Volume	Df	De	H	R1	R2	H1	H2	H3	H4	H5	H6	H7	H8	H9	H11	H12	H13
	[lt]	[mm]																
500	478	//	750	1620	//	1800	230	247	260	533	629	744	841	940	1011	1231	1343	1360
600	560	//	750	1870	//	2025	230	247	260	582	695	855	915	1060	1144	1382	1593	1610
800	803	790	940	1840	1895	2070	248	265	278	584	690	762	823	988	1115	1332	1541	1558
1000	944	790	940	2130	2180	2340	248	265	284	656	787	953	998	1188	1309	1588	1831	1843
1250	1248	//	1100	2202	//	2475	296	313	326	705	835	884	986	1068	1357	1586	1879	1896
1500	1432	//	1100	2250	//	2505	296	313	336	736	845	1006	1061	1286	1377	1653	1909	1921
2000	1970	//	1300	2320	//	2670	330	347	370	770	879	1001	1060	1300	1411	1687	1943	1955

Net volume data according to EN 15332 available on product label.

ECO-COMBI 2 VC - DISMOUNTABLE SOFT FLEECE INSULATION

Model	Volume	Df	De	H	R1	R2	H1	H2	H3	H4	H5	H6	H7	H8	H9	H11	H12	H13
	[lt]	[mm]																
800	803	790	1010	1840	1895	2100	248	265	278	584	690	762	823	988	1115	1332	1541	1558
1000	944	790	1010	2130	2180	2370	248	265	284	656	787	953	998	1188	1309	1588	1831	1843
1250	1248	900	1120	2202	2262	2475	296	313	326	705	835	884	986	1068	1357	1586	1879	1896
1500	1432	950	1210	2250	2315	2565	296	313	336	736	845	1006	1061	1286	1377	1653	1909	1921
2000	1970	1100	1360	2320	2400	2700	330	347	370	770	879	1001	1060	1300	1411	1687	1943	1955

Net volume data according to EN 15332 available on product label.

Products designed and manufactured for using within temperature and pressure limits in accordance to Art. 4.3 Directive 2014/68/EU (P.E.D.)

ECO-COMBI **3**

MULTI-HEAT ENERGY BUFFER WITH STAINLESS STEEL 316L D.H.W. CORRUGATED COIL AND 2 FIXED HEAT EXCHANGERS

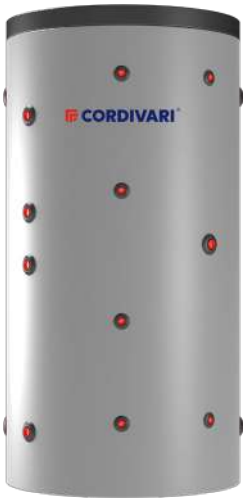

APPLICATION
Heating hot water storage and rapid D.H.W. production.

MATERIAL
- ***BUFFER TANK:*** Mild steel painted on the outside. Buffer intented for closed circuit installation, so no anti-corrosion treatment is provided.
- ***D.H.W. STORAGE :*** Stainless steel 316L corrugated coil, suitable for D.H.W. according to D. M. n. 174 dated 06.04.04

HEAT EXCHANGER
Nr. 2 mild steel fixed heat exchangers.

TECHNICAL DESCRIPTION
Multi-Heat Energy tanks EcoCombi 3 are used in units with a typically discontinuous energy source for double use: heating system and sanitary hot water system .
- Thermal storage, combining the possibility to produce hot water for sanitary use. In such case , storage heating volume allows the generator to regularly work , limiting number of stops due to the inadequate energy request of the heating system. Moreover, it limits the emission of smoke and the creation of corrosive condensate (smoke side).
- Domestic hot water production system for domestic and sanitary use where heating water is stored. In this system , the high potentiality of the Eco Combi allows to obtain a good production of hot sanitary water even if temperatures of the primary system are not so high (i.e using heat pumps as primary source and solar source as support)

The particular shape of the corrugated coil is avoiding any problem relating to the storage of domestic hot water and ensure high heat exchange performances.

INSULATION
HARD: High thermal insulation with ecological polyurethane hard foam. Models 800-1000 available with dismountable hard foam insulation.
SOFT (DISMOUNTABLE): NOFIRE® polyester fleece 100% made of recyclable material, with high thermal insulation. Fire resistance class B-s2d0 according to EN 13501. Grey PVC external lining.

WARRANTY
5 years (See general sales conditions and warranty)

ACCESSORIES AND SPARE PARTS
See Accessories section for the entire list.





Dismountable insulation

PROMPT AVAILABILITY

	Model	Art. Nr.	316L stainless steel corrugated coil for D.H.W. production		Upper heat exchanger		Lower heat exchanger		ErP
			Volume [lt]	Surface [m²]	Volume [lt]	Surface [m²]	Volume [lt]	Surface [m²]	ENERGY EFFICIENCY CLASS
ECO-COMBI 3 VB HARD FOAM INSULATION	**500**	3270162316201	26,6	4,5	8	1,3	11,5	1,9	**C**
	600	3270162316202	31,0	5,3	8	1,3	13	2,1	**C**
	800	3270162316203	33,4	5,8	11,8	1,8	16,3	2,5	**B**
	1000	3270162316204	45,5	7,8	16,3	2,5	20,7	3,1	**C**
	1250	3270162316205	45,5	7,8	16,3	2,5	22,3	3,4	**B**
	1500	3270162316206	55,3	9,5	16,8	2,8	25,3	3,8	**C**
	2000	3270162316207	72,2	12,3	19,1	2,8	29,6	4,6	**B**
ECO-COMBI 3 VC DISMOUNTABLE SOFT FLEECE INSULATION	**800**	3270162282282	33,4	5,8	11,8	1,8	16,3	2,5	**C**
	1000	3270162282283	45,5	7,8	16,3	2,5	20,7	3,1	**C**
	1250	3270162282284	45,5	7,8	16,3	2,5	22,3	3,4	**C**
	1500	3270162282285	55,3	9,5	16,8	2,8	25,3	3,8	**C**
	2000	3270162282286	72,2	12,3	19,1	2,8	29,6	4,6	**C**

ACCESSORIES

Electric immersion heater



Available kit	
[Kw]	Tension [V]
from **1,5** to **3**	220 - MONOPHASE
from **4** to **9**	400 - THREEPHASE
See accessories	

Thermometer

Art. Nr.
5032240000107
5 units box



Buffer tanks connecting kit

Art. Nr.	Connection
5006170001001	1" 1/2
Stainless steel extensible connecting kit - (200 ÷ 400 mm)	



Products designed and manufactured for using within temperature and pressure limits in accordance to Art. 4.3 Directive 2014/68/EU (P.E.D.)

ECO-COMBI **3**

MULTI-HEAT ENERGY BUFFER
WITH STAINLESS STEEL 316L D.H.W. CORRUGATED COIL AND 2 FIXED HEAT EXCHANGERS

STORAGE		CORRUGATED DHW STAINLESS STEEL COIL	FIXED HEAT EXCHANGER	
Pmax	Tmax	Pmax	Pmax	Tmax
4 bar	99 °C	6 bar	12 bar	110 °C

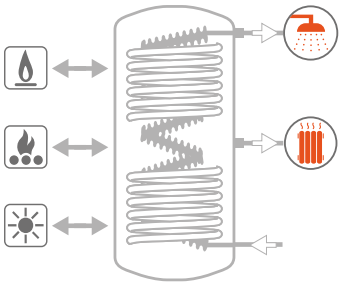

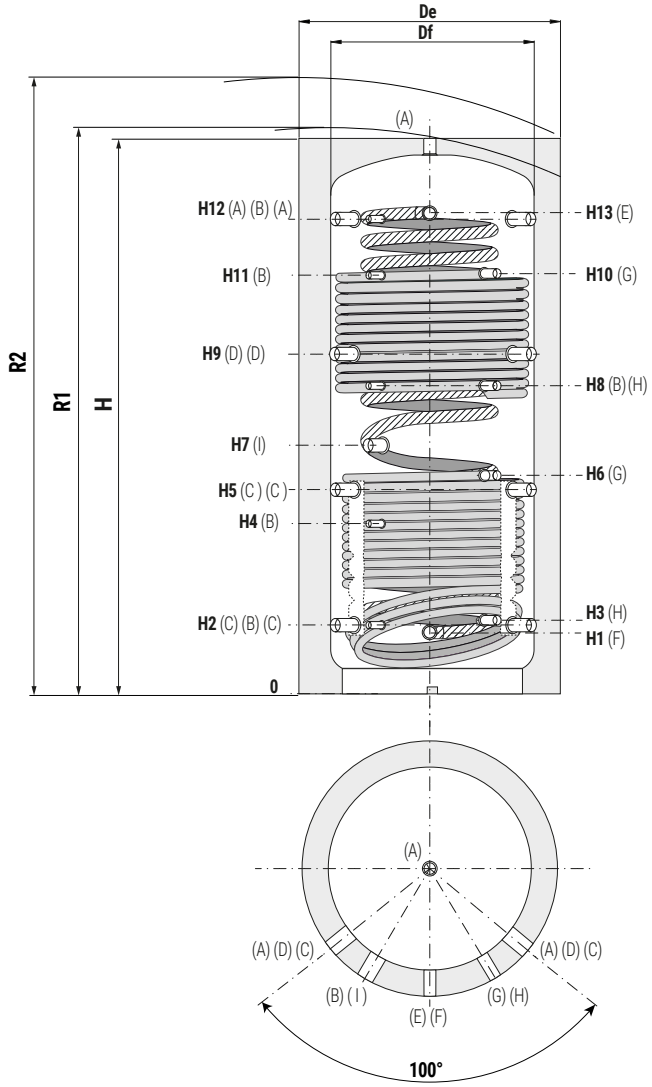

A	Heating delivery/from generator/Air purge G 1"1/2 F
B	Instrumentation G 1/2" F
C	Heating return/to generator
D	Heating delivery/from generator G 1"1/2 F
E	Domestic hot water outlet G 1"
F	Domestic cold water circuit inlet G 1" M
G	Fixed heat exchanger inlet G 1" F
H	Fixed heat exchanger outlet G 1" F
I	Connection for electric immersion heater G 1"1/2 F



Dismountable insulation

ECO-COMBI 3 VB - HARD FOAM INSULATION

Model	Volume	Df	De	H	R1	R2	H1	H2	H3	H4	H5	H6	H7	H8	H9	H10	H11	H12	H13
	[lt]	[mm]																	
500	478	//	750	1620	//	1800	230	247	260	533	629	744	841	930	1011	1231	1231	1343	1360
600	560	//	750	1870	//	2025	230	247	260	582	695	855	915	1060	1144	1361	1382	1593	1610
800	803	790	940	1840	1895	2070	248	265	278	584	690	762	823	988	1115	1332	1332	1541	1558
1000	944	790	940	2130	2180	2340	248	265	284	656	787	953	998	1188	1309	1661	1588	1831	1843
1250	1248	//	1100	2202	//	2475	296	313	326	705	835	884	986	1068	1357	1641	1586	1879	1896
1500	1432	//	1100	2250	//	2505	296	313	336	736	845	1006	1061	1286	1377	1673	1653	1909	1921
2000	1970	//	1300	2320	//	2670	330	347	370	770	879	1001	1060	1300	1411	1687	1687	1943	1955

Net volume data according to EN 15332 available on product label.

ECO-COMBI 3 VC - DISMOUNTABLE SOFT FLEECE INSULATION

Model	Volume	Df	De	H	R1	R2	H1	H2	H3	H4	H5	H6	H7	H8	H9	H10	H11	H12	H13
	[lt]	[mm]																	
800	803	790	1010	1840	1895	2100	248	265	278	584	690	762	823	988	1115	1332	1332	1541	1558
1000	944	790	1010	2130	2180	2370	248	265	284	656	787	953	998	1188	1309	1661	1588	1831	1843
1250	1248	900	1120	2202	2262	2475	296	313	326	705	835	884	986	1068	1357	1641	1586	1879	1896
1500	1432	950	1210	2250	2315	2565	296	313	336	736	845	1006	1061	1286	1377	1673	1653	1909	1921
2000	1970	1100	1360	2320	2400	2700	330	347	370	770	879	1001	1060	1300	1411	1687	1687	1943	1955

Net volume data according to EN 15332 available on product label.

Products designed and manufactured for using within temperature and pressure limits in accordance to Art. 4.3 Directive 2014/68/EU (P.E.D.)

ECO-COMBI

CORRUGATED COIL - PERFORMANCES DURING DHW PRODUCTION PHASE



STORAGE AT 65°			COMPLETE HEATED STORAGE VOLUME		UPPER PART HEATED STORAGE VOLUME	
Model	DHW Volume	DHW exchanger surface	Max sanitary water produced from 10°C to 45°C with storage at 65°C and boiler on	Max sanitary water produced from 10°C to 45°C with storage at 65°C and boiler off	Max sanitary water produced from 10°C to 45°C with storage at 65°C and boiler on	Max sanitary water produced from 10°C to 45°C with storage at 65°C and boiler off
	[lt]	[m²]	[lt/min]	[lt]	[lt/min]	[lt]
500	26,6	4,5	29	10 lt/min: 354 lt 25 lt/min: 227 lt	15	10 lt/min: 102 lt 25 lt/min: 75 lt
600	31	5,3	34	10 lt/min: 400 lt 25 lt/min: 257 lt	18	10 lt/min: 115 lt 25 lt/min: 85 lt
800	33,4	5,8	37	10 lt/min: 587 lt 25 lt/min: 377 lt	23	10 lt/min: 218 lt 25 lt/min: 160 lt
1000	45,5	7,8	50	10 lt/min: 800 lt 25 lt/min: 541 lt	27	10 lt/min: 294 lt 25 lt/min: 216 lt
1250	45,5	7,8	50	10 lt/min: 922 lt 25 lt/min: 592 lt	27	10 lt/min: 310 lt 25 lt/min: 230 lt
1500	55,3	9,5	57	10 lt/min: 1144 lt 25 lt/min: 735 lt	34	10 lt/min: 345 lt 25 lt/min: 258 lt
2000	72,2	12,3	74	10 lt/min: 1657 lt 25 lt/min: 1142 lt	44	10 lt/min: 463 lt 25 lt/min: 340 lt

LOWER HEAT EXCHANGER POWER - ECO COMBI 2 - ECO COMBI 3

Output of the EcoCombi 2 - EcoCombi 3 lower heat exchangers depending on the average DeltaT between primary and accumulation considering flow rate 3 m³/h.

Thermal output is given in both kW or kcal/h in terms of average temperature difference between primary and secondary circuit, all for a range of primary 3 m³/h.
For example, a 1000 liters ECOCOMBI 2 with a water flow of 3 m³/h at 80 °C inlet and outlet at 70 °C, has on the storage of water an average temperature of 60 °C, the main difference of temperature will be:
(80 +70) / 20-60 = 15 °C and therefore you can exchange up to approximately 32 kW.

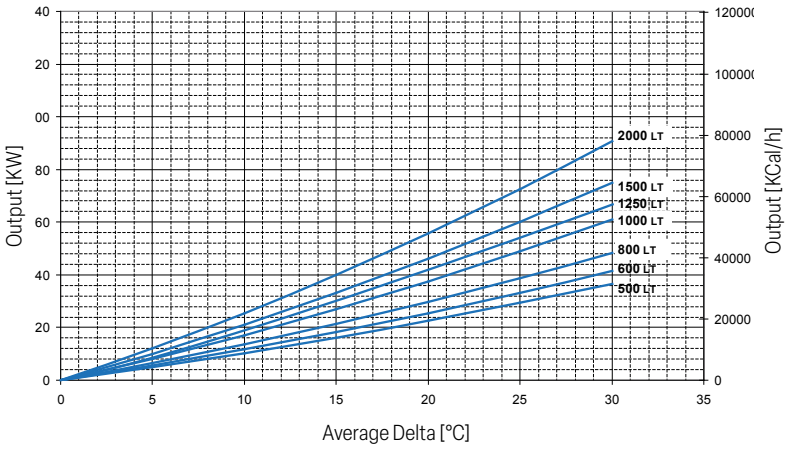

UPPER HEAT EXCHANGER POWER - ECO COMBI 3

Output of the EcoCombi 3 upper heat exchangers depending on the average DeltaT between primary and accumulation considering flow rate 3 m³/h.

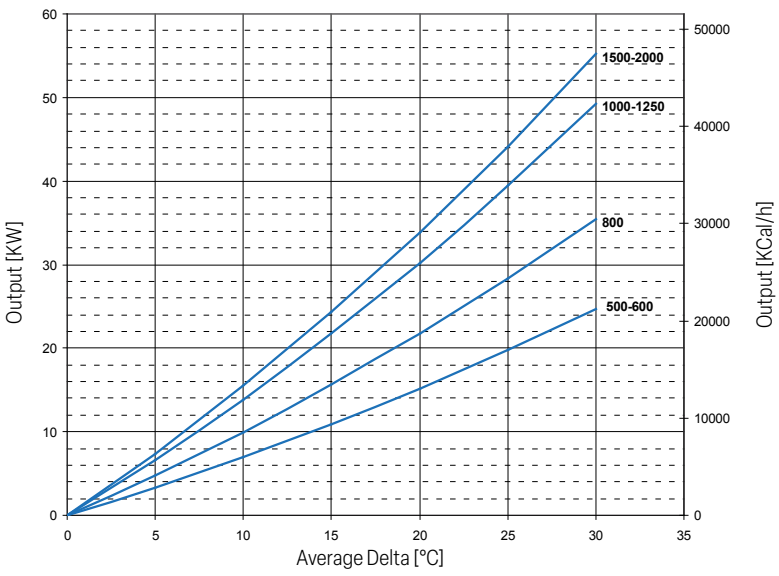

ECO-COMBI

CORRUGATED COIL - PERFORMANCES DURING DHW PRODUCTION PHASE



STORAGE AT 55°			COMPLETE HEATED STORAGE VOLUME		UPPER PART HEATED STORAGE VOLUME	
Model	DHW Volume	DHW exchanger surface	Max sanitary water produced from 10°C to 45°C with storage at 55°C and boiler on	Max sanitary water produced from 10°C to 45°C with storage at 55°C and boiler off	Max sanitary water produced from 10°C to 45°C with storage at 55°C and boiler on	Max sanitary water produced from 10°C to 45°C with storage at 55°C and boiler off
	[lt]	[m²]	[lt/min]	[lt]	[lt/min]	[lt]
500	26,6	4,5	24	10 lt/min: 260 lt 25 lt/min: 166 lt	14	10 lt/min: 75 lt 25 lt/min: 55 lt
600	31	5,3	28	10 lt/min: 293 lt 25 lt/min: 188 lt	17	10 lt/min: 84 lt 25 lt/min: 62 lt
800	33,4	5,8	31	10 lt/min: 430 lt 25 lt/min: 276 lt	19	10 lt/min: 160 lt 25 lt/min: 216 lt
1000	45,5	7,8	42	10 lt/min: 587 lt 25 lt/min: 397 lt	25	10 lt/min: 158 lt 25 lt/min: 216 lt
1250	45,5	7,8	42	10 lt/min: 676 lt 25 lt/min: 434 lt	25	10 lt/min: 158 lt 25 lt/min: 227 lt
1500	55,3	9,5	51	10 lt/min: 539 lt 25 lt/min: 1215 lt	30	10 lt/min: 253 lt 25 lt/min: 189 lt
2000	72,2	12,3	65	10 lt/min: 539 lt 25 lt/min: 1215 lt	39	10 lt/min: 340 lt 10 lt/min: 249

LOWER HEAT EXCHANGER PRESSURE DROP - ECO COMBI 2 - ECO COMBI 3

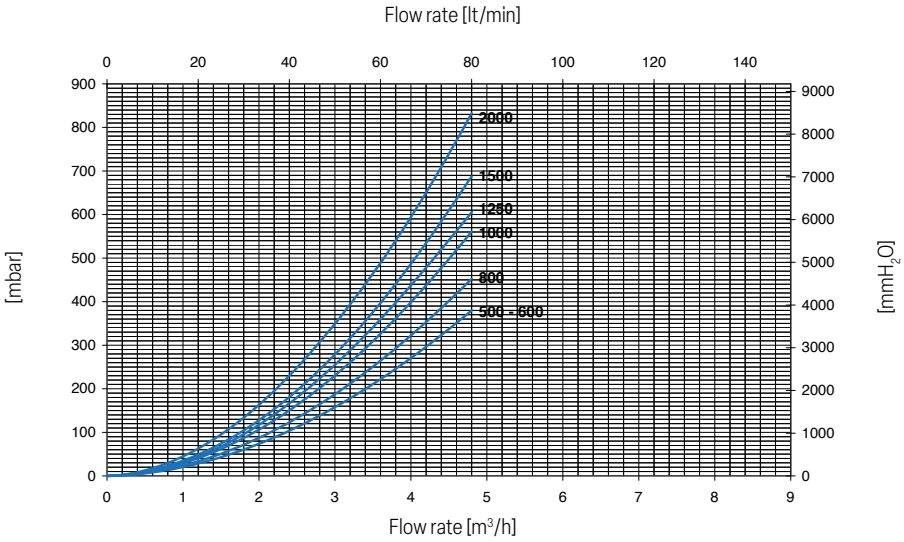

UPPER HEAT EXCHANGER PRESSURE DROP - ECO COMBI 3

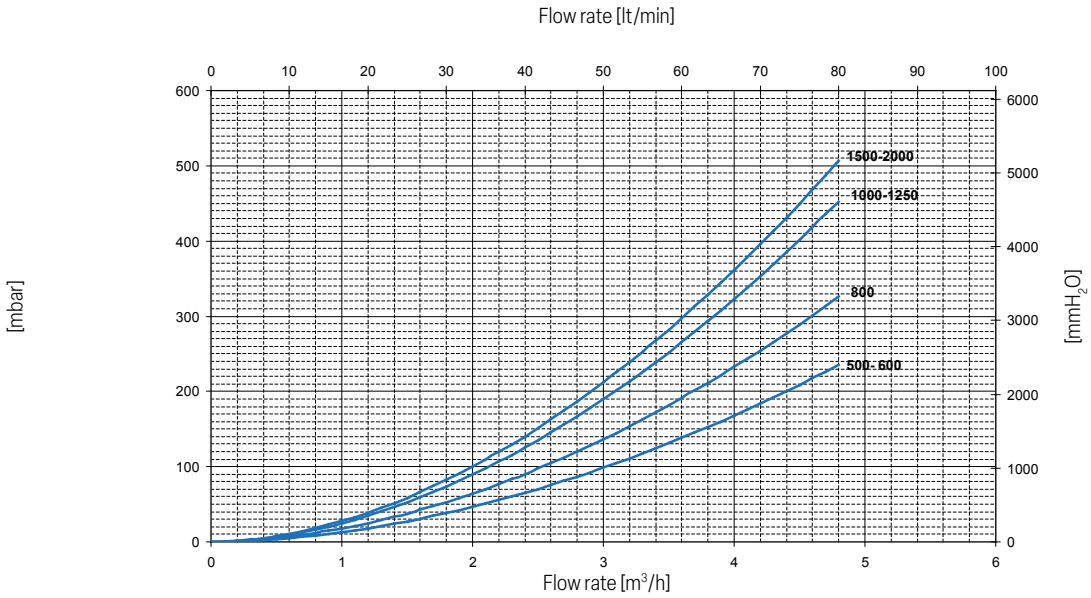

ECO-COMBI **1 DOMUS**

MULTI-HEAT ENERGY BUFFER WITH STAINLESS STEEL 316L D.H.W. CORRUGATED COIL



APPLICATION
Heating hot water storage and rapid D.H.W. production.

MATERIAL
- ***BUFFER TANK:*** Mild steel painted on the outside. Buffer intented for closed circuit installation, so no anti-corrosion treatment is provided.
- ***D.H.W. STORAGE :*** Stainless steel 316L corrugated coil, suitable for D.H.W. according to D. M. n. 174 dated 06.04.04

TECHNICAL DESCRIPTION
Multi-Heat Energy tanks EcoCombi 1 Domus are used in units with a typically discontinuous energy source for double use: heating system and domestic hot water systems.
- Thermal storage, combining the possibility to produce hot water for sanitary use. In such case, storage heating volume allows the generator to regularly work, limiting number of stops due to the inadequate energy request of the heating systems. Moreover, it limits the emission of smoke and the creation of corrosive condensate (smoke side).
- Domestic hot water production system for domestic and sanitary use where heating water is stored. In this system , the high potentiality of the Eco Combi allows to obtain a good production of hot sanitary water even if temperatures of the primary system are not so high (i.e using heat pumps as primary source and solar source as support).

The particular shape of the corrugated pipe avoids any problem relating to the storage of domestic hot water and ensures high heat exchange performances.

INSULATION
High thermal insulation with ecological hard polyurethane foam. Grey PVC external lining complete with top cover.

WARRANTY
5 years (See general sales conditions and warranty)

ACCESSORIES AND SPARE PARTS
See Accessories section for the entire list.





Dismountable insulation

PROMPT AVAILABILITY

		Model	Art. Nr.	316L stainless steel corrugated coil for D.H.W. production		ErP
				Volume [lt]	Surface [m²]	ENERGY EFFICIENCY CLASS
	 **ECO-COMBI 1 DOMUS VB** HARD FOAM INSULATION	**200**	3270162316021	2,9	1,4	**B**
		300	3270162316022	5,1	2,5	**B**

Model	MAX SANITARY WATER PRODUCED FROM 10°C TO 45°C WITH STORAGE AT 60°C	MAX SANITARY WATER PRODUCED FROM 10°C TO 45°C WITH STORAGE AT 50°C
	[lt/min]	[lt/min]
200	11	8
300	23	16

ACCESSORIES

Electric immersion heater



Available kit	
[Kw]	Tension [V]
from **1,5** to **3**	220 - MONOPHASE
See accessories	

Thermometer

Art. Nr.
5032240000107
5 units box



Products designed and manufactured for using within temperature and pressure limits in accordance to Art. 4.3 Directive 2014/68/EU (P.E.D.)

ECO-COMBI **1 DOMUS**

MULTI-HEAT ENERGY BUFFER WITH STAINLESS STEEL 316L D.H.W. CORRUGATED COIL

STORAGE		CORRUGATED DHW STAINLESS STEEL 316L COIL
Pmax	Tmax	Pmax
4 bar	99 °C	6 bar

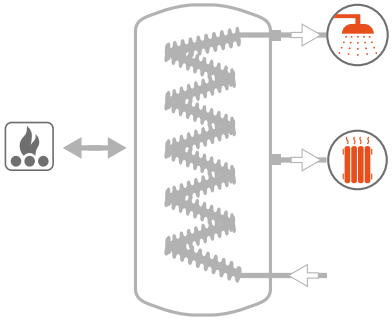

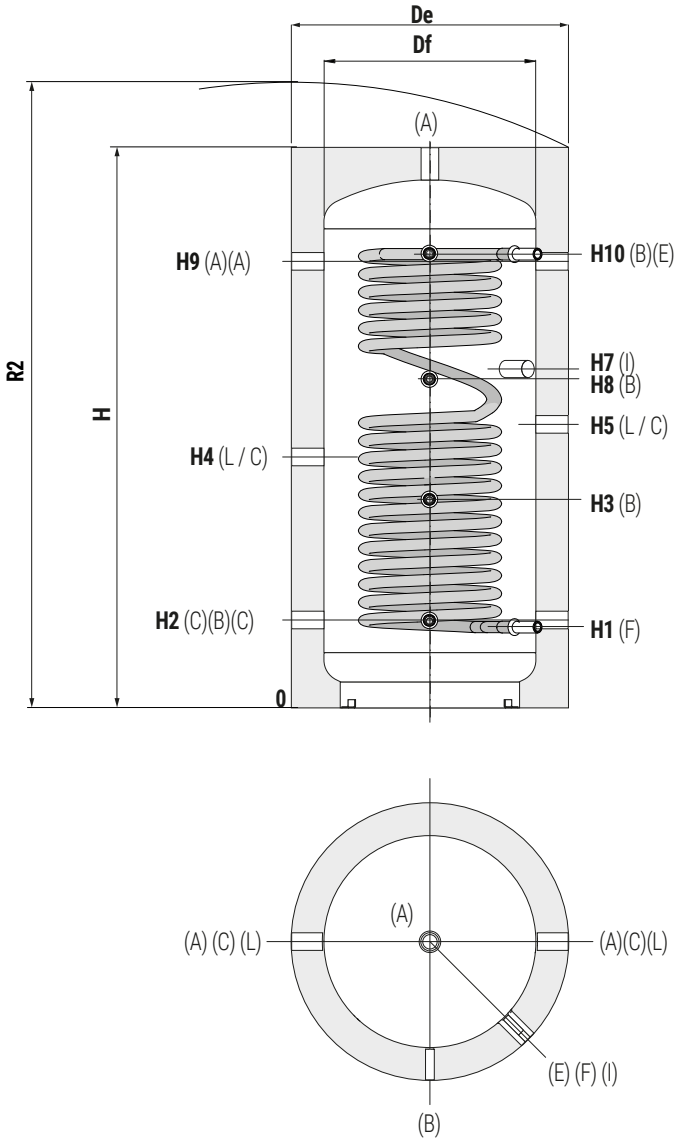

A	Heating delivery/from generator/Air purge G 1"1/2 F
B	Instrumentation G 1/2" F
C	Heating return/to generator
E	Domestic hot water outlet G 1/2" F
F	Domestic cold water circuit inlet G 1/2" F
I	Connection for electric immersion heater G 1"1/2 F
L	Heating delivery G 1"1/2 F

Model	Volume	DE	H	R2	H1	H2	H3	H4	H5	H7	H8	H9	H10
	[lt]	[mm]											
200	180	590	1310	1445	227	252	552	602	702	852	822	1052	1079
300	279	690	1360	1530	257	272	572	622	722	872	812	1072	1084

Net volume data according to EN 15332 available on product label.

Products designed and manufactured for using within temperature and pressure limits in accordance to Art. 4.3 Directive 2014/68/EU (P.E.D.)

ECO-COMBI **2 DOMUS**

MULTI-HEAT ENERGY BUFFER WITH STAINLESS STEEL 316L D.H.W. CORRUGATED COIL AND 1 FIXED HEAT EXCHANGER



APPLICATION
Heating hot water storage and rapid D.H.W. production.

MATERIAL
- ***BUFFER TANK:*** Mild steel painted on the outside. Buffer intented for closed circuit installation, so no anti-corrosion treatment is provided.
- ***D.H.W. STORAGE :*** Stainless steel 316L corrugated coil, suitable for D.H.W. according to D. M. n. 174 dated 06.04.04

HEAT EXCHANGER
Nr. 1 mild steel fixed heat exchanger.

TECHNICAL DESCRIPTION
Multi-Heat Energy tanks EcoCombi 2 Domus are used in units with a typically discontinuous energy source for double use: heating system and domestic hot water systems.
- Thermal storage, combining the possibility to produce hot water for sanitary use. In such case, storage heating volume allows the generator to regularly work, limiting number of stops due to the inadequate energy request of the heating systems. Moreover, it limits the emission of smoke and the creation of corrosive condensate (smoke side).
- Domestic hot water production system for domestic and sanitary use where heating water is stored. In this system , the high potentiality of the Eco Combi allows to obtain a good production of hot sanitary water even if temperatures of the primary system are not so high (i.e using heat pumps as primary source and solar source as support).

The particular shape of the corrugated pipe avoids any problem relating to the storage of domestic hot water and ensures high heat exchange performances.

INSULATION
High thermal insulation with ecological hard polyurethane foam. Grey PVC external lining complete with top cover.

WARRANTY
5 years (See general sales conditions and warranty)

ACCESSORIES AND SPARE PARTS
See Accessories section for the entire list.





Dismountable insulation

PROMPT AVAILABILITY

		Model	Art. Nr.	316L stainless steel corrugated coil for D.H.W. production		Fixed heat exchanger	ErP
				Volume	Surface	Surface	ENERGY EFFICIENCY CLASS
				[lt]	[m²]	[m²]	
		**200**	3270162282501	2,9	1,4	1	**B**
		300	3270162282502	5,1	2,5	1,2	**B**

ECO-COMBI 2 DOMUS VB
HARD FOAM INSULATION

Model	Max solar collectors surface	Max sanitary water produced from 10°C to 45°C with storage at 60°C	Max sanitary water produced from 10°C to 45°C with storage at 50°C
	[m²]	[lt/min]	[lt/min]
200	5	11	8
300	7,5	23	16

ACCESSORIES

Electric immersion heater



Available kit	
[Kw]	Tension [V]
from **1,5** to **3**	220 - MONOPHASE
See accessories	

Thermometer

Art. Nr.
5032240000107
5 units box



Products designed and manufactured for using within temperature and pressure limits in accordance to Art. 4.3 Directive 2014/68/EU (P.E.D.)

ECO-COMBI **2 DOMUS**

MULTI-HEAT ENERGY BUFFER WITH STAINLESS STEEL 316L D.H.W. CORRUGATED COIL AND 1 FIXED HEAT EXCHANGER

STORAGE		CORRUGATED DHW STAINLESS STEEL 316L COIL	FIXED HEAT EXCHANGER	
Pmax	Tmax	Pmax	Pmax	Tmax
4 bar	99 °C	6 bar	12 bar	110 °C

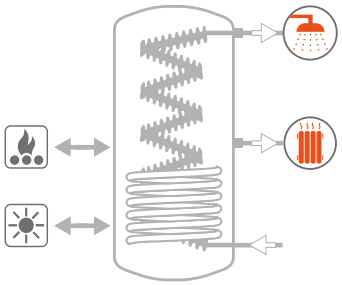

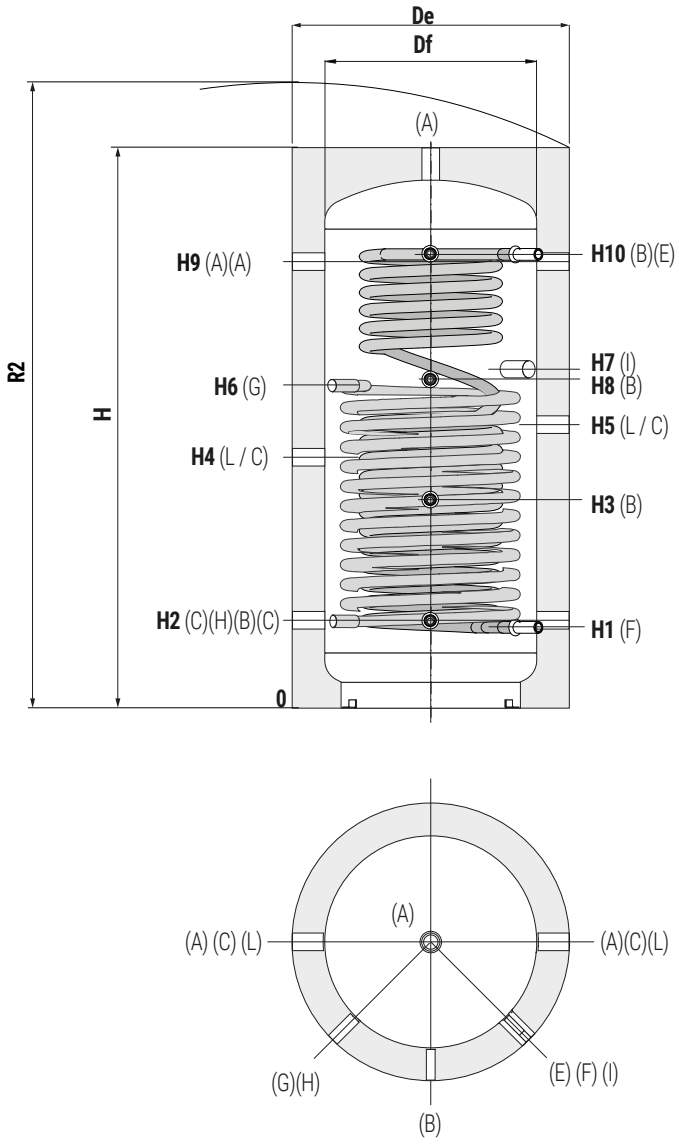

A	Heating delivery/from generator/Air purge G 1"1/2 F
B	Instrumentation G 1/2" F
C	Heating return/to generator
E	Domestic hot water outlet G 1/2" F
F	Domestic cold water circuit inlet G 1/2" F
G	Fixed heat exchanger inlet G 1" F
H	Fixed heat exchanger outlet G 1" F
I	Connection for electric immersion heater G 1"1/2 F
L	Heating delivery G 1"1/2 F

Model	Volume	DE	H	R2	H1	H2	H3	H4	H5	H6	H7	H8	H9	H10
	[lt]	[mm]												
200	180	590	1310	1445	227	252	552	602	702	822	852	822	1052	1079
300	279	690	1360	1530	257	272	572	622	722	812	872	812	1072	1084

Net volume data according to EN 15332 available on product label.

Products designed and manufactured for using within temperature and pressure limits in accordance to Art. 4.3 Directive 2014/68/EU (P.E.D.)

PUFFERMAS® 1

HEATING WATER BUFFER TANK WITH MACS® MODULE FOR IMMEDIATE D.H.W. PRODUCTION



APPLICATION
Stratified storage of technical water and instantaneous production of domestic hot water (DHW) with high flow rates.

MATERIAL
Mild steel painted on the outside. Buffer intented for closed circuit installation, so no anti-corrosion treatment is provided.

D.H.W. HEAT EXCHANGER
External MACS® module with Stainless steel 316L brazed plate exchanger for immediate D.H.W. production.

TECHNICAL DESCRIPTION
The immediate and fast production of D.H.W. granted by the MACS® module allows the following benefits:
- to reduce dimensions of the water heater needed
- easy maintenance
- maximum hygiene for anti-legionellosis bacteria's
- to produce more DHW than the quantity obtained by boiler with similar capacity because hot water is stored at a higher temperature than DHW.

INSULATION
Buffer tank: High thermal insulation with ecological hard polyurethane foam. Models 800-1000 available with dismountable hard foam insulation.
MACS® module: insulating PPE cover.
Grey PVC external lining.

WARRANTY
5 years (tank). See general sales conditions and warranty for electrical parts.

ACCESSORIES AND SPARE PARTS
See Accessories section for the entire list.

IMMEDIATE DHW PRODUCTION

Dismountable insulation



PUFFERMAS® 1 VB
HARD FOAM INSULATION

Model	MACS® Module	Art. Nr.	ENERGY EFFICIENCY CLASS
500	70	3251162314803	C
600		3251162314804	C
800		3251162314805	B
1000		3251162314806	C
1500		3251162314807	C
1000	120	3251162314808	C
1500		3251162314809	C

Model	MACS® Module	DHW production (10-45°C) with accumulation at 80°C	Maximum availability of DHW (10-45°C) with accumulation at 80°C
		[lt/min]	[lt]
500	70	37	680
600		37	800
800		37	1150
1000		37	1350
1500		37	2080
1000	120	61	1680
1500		61	2580

ACCESSORIES

Thermometer

Art. Nr.
5032240000107
5 units box



Recirculation kit

Art. Nr.
5221000000073
DHW recirculation group



Buffer tanks connecting kit

Art. Nr.	Connection
5006170001001	1" 1/2
Stainless steel extensible connecting kit - (200 ÷ 400 mm)	



Products designed and manufactured for using within temperature and pressure limits in accordance to Art. 4.3 Directive 2014/68/EU (P.E.D.)

PUFFERMAS® 1

HEATING WATER BUFFER TANK WITH MACS® MODULE FOR IMMEDIATE D.H.W. PRODUCTION

STORAGE		STAINLESS STEEL 316L BRAZED PLATE EXCHANGER (MACS®)		DHW HARDNESS
Pmax	Tmax	Pmax	Tmax	F max
4 bar	99 °C	10 bar	99 °C	30 °f

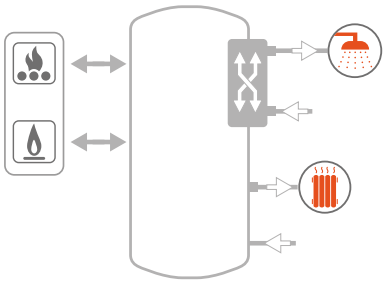

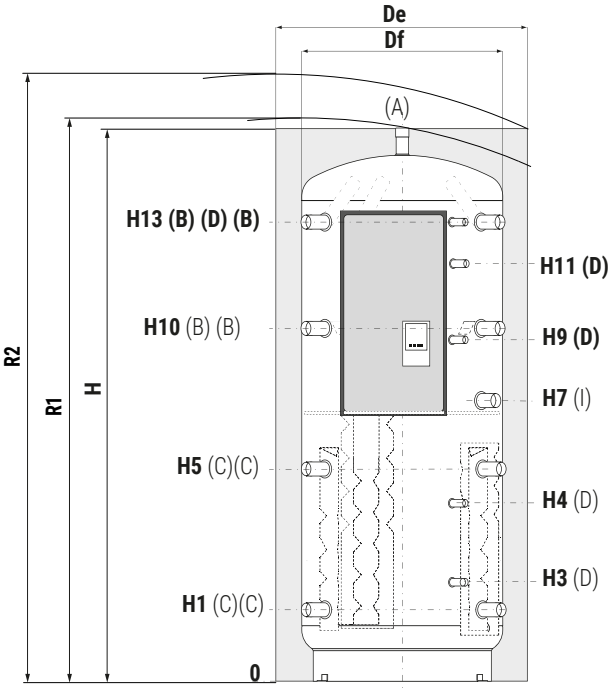

A	Heating delivery/from generator/Air purge G 1"1/2 F
B	Heating delivery/from generator G 1"1/2 F
C	Heating return/to generator G 1"1/2 F
D	Instrumentation G 1/2" F
I	Connection for electric immersion heater G 1"1/2 F
L	Domestic hot water outlet G 3/4" M (G 1" M for models 120kW)
M	Domestic cold water circuit inlet G 3/4" M (G 1" M for models 120kW)

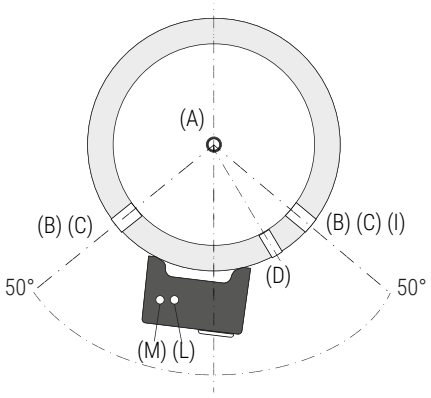

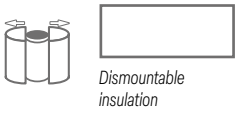

Dismountable insulation

Model	Volume	De	Df	H	R1	R2	H1	H3	H4	H5	H7	H9	H10	H11	H13
	[lt]	[mm]													
500	478	750	650	1619	//	1785	247	360	533	629	870	1025	1011	1130	1343
600	560	750	650	1870	//	2015	247	360	582	695	970	1200	1144	1485	1593
800	805	940	790	1840	1880	2067	265	378	584	690	918	1115	1115	1442	1541
1000	946	940	790	2130	2165	2329	265	384	656	787	1145	1388	1309	1588	1831
1500	1454	1100	950	2250	//	2505	313	432	736	845	1236	1396	1377	1783	1909

Net volume data according to EN 15332 available on product label.

MACS® ELECTRONIC MODULE FOR IMMEDIATE D.H.W. PRODUCTION

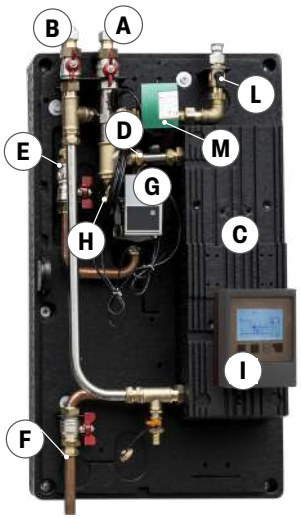

A	Domestic hot water outlet (ACS)
B	Domestic cold water circuit inlet
C	Stainless steel plate exchanger
D	Flow rate/ temperature probe
E	Primary circuit inlet
F	Primary circuit outlet
G	"Energy Savings" circulation Pump
H	Valves In/Out for DHW
I	Electronic control unit

DHW recirculation kit for MACS® module (optional)	
L	Connection for D.H.W. recirculation (optional)
M	D.H.W. recirculation pump (optional)

FOR DHW FLOW RATE CHARTS REFER TO HYDRONIC SECTION - ELECTRONIC MACS® MODULE

The MACS® module is an external unit that immediately produces D.H.W., using the heat energy stored in the Buffer thanks to the stainless steel plate exchanger, granting safety and comfort with the possibility to regulate outlet temperature.
With the new electronic regulation system, the management of the temperature on the DHW side is guaranteed and maintained in an optimal manner and with immediate response times from the electronic control unit on the module.

Products designed and manufactured for using within temperature and pressure limits in accordance to Art. 4.3 Directive 2014/68/EU (P.E.D.)

PUFFERMAS® 2

HEATING WATER BUFFER TANK WITH 1 FIXED HEAT EXCHANGER AND MACS® MODULE FOR IMMEDIATE D.H.W. PRODUCTION



APPLICATION
Stratified storage of technical water and instantaneous production of domestic hot water (DHW) with high flow rates.

MATERIAL
Mild steel painted on the outside. Buffer intented for closed circuit installation, so no anti-corrosion treatment is provided.

D.H.W. HEAT EXCHANGER
External MACS® module with Stainless steel 316L brazed plate exchanger for immediate D.H.W. production.

HEATING WATER HEAT EXCHANGER
Nr. 1 fixed heat exchanger suitable for solar thermal systems.

TECHNICAL DESCRIPTION
The immediate and fast production of D.H.W. granted by the MACS® module allows the following benefits:
- to reduce dimensions of the water heater needed
- easy maintenance
- maximum hygiene for anti-legionellosis bacteria's
- to produce more DHW than the quantity obtained by boiler with similar capacity because hot water is stored at a higher temperature than DHW.

INSULATION
Buffer tank: High thermal insulation with ecological hard polyurethane foam. Models 800-1000 available with dismountable hard foam insulation.
MACS® module: insulating PPE cover.
Grey PVC external lining.

WARRANTY
5 years (tank). See general sales conditions and warranty for electrical parts.

ACCESSORIES AND SPARE PARTS
See Accessories section for the entire list.

IMMEDIATE DHW PRODUCTION

Dismountable insulation



PUFFERMAS® 2 VB
HARD FOAM INSULATION

Model	MACS® Module	Art. Nr.	Heat exchanger surface [m²]	ErP ENERGY EFFICIENCY CLASS
500	70	3251162314823	1,9	C
600		3251162314824	2,1	C
800		3251162314825	2,5	B
1000		3251162314826	3,1	C
1500		3251162314827	3,8	C
1000	120	3251162314828	3,1	C
1500		3251162314829	3,8	C

Model	MACS® Module	DHW production (10-45°C) with accumulation at 80°C [lt/min]	Maximum availability of DHW (10-45°C) with accumulation at 80°C [lt]
500	70	37	680
600		37	800
800		37	1150
1000		37	1350
1500		37	2080
1000	120	61	1680
1500		61	2580

ACCESSORIES

Thermometer

Art. Nr.
5032240000107
5 units box



Recirculation kit

Art. Nr.
5221000000073
DHW recirculation group



Buffer tanks connecting kit

Art. Nr.	Connection
5006170001001	1" 1/2
Stainless steel extensible connecting kit - (200 ÷ 400 mm)	



Products designed and manufactured for using within temperature and pressure limits in accordance to Art. 4.3 Directive 2014/68/EU (P.E.D.)

PUFFERMAS® 2

HEATING WATER BUFFER TANK WITH 1 FIXED HEAT EXCHANGER AND MACS® MODULE FOR IMMEDIATE D.H.W. PRODUCTION

STORAGE		FIXED HEAT EXCHANGER		HEAT EXCHANGER STAINLESS STEEL PLATES (MACS®)		DHW HARDNESS
Pmax	Tmax	Pmax	Tmax	Pmax	Tmax	F max
4 bar	99 °C	12 bar	110 °C	10 bar	99 °C	30 °f

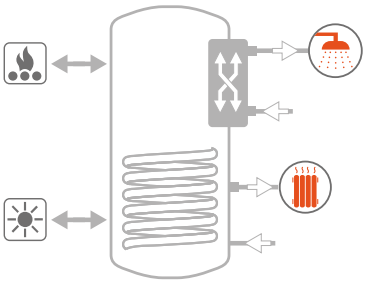

See TECHNICAL SUPPORT chapter for example of installation

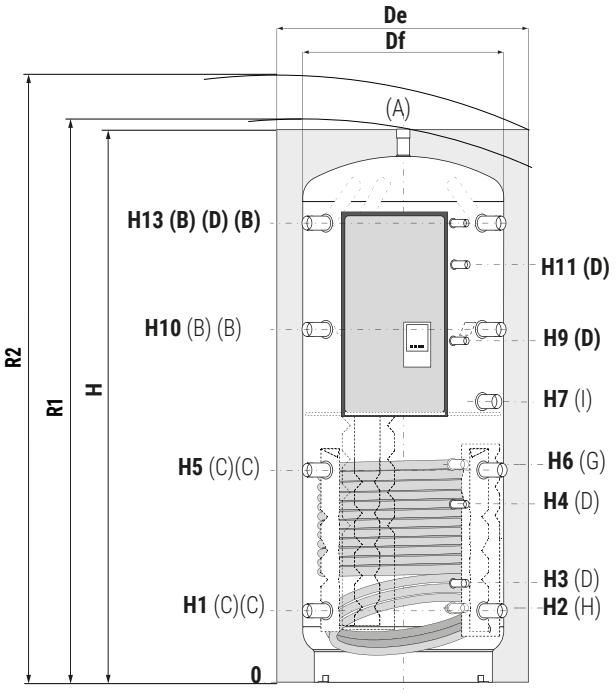

A	Heating delivery/from generator/Air purge G 1"1/2 F
B	Heating delivery/from generator G 1"1/2 F
C	Heating return/to generator G 1"1/2 F
D	Instrumentation G 1/2" F
G	Fixed heat exchanger inlet G 1" F
H	Fixed heat exchanger outlet G 1" F
I	Connection for electric immersion heater G 1"1/2 F
L	Domestic hot water outlet G 3/4" M (G 1" M for models 120kW)
M	Domestic cold water circuit inlet G 3/4" M (G 1" M for models 120kW)

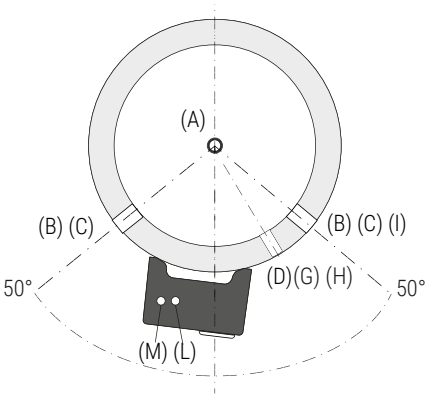

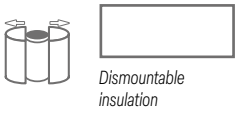

Dismountable insulation

Model	Volume	De	Df	H	R1	R2	H1	H2	H3	H4	H5	H6	H7	H9	H10	H11	H13
	[lt]	[mm]															
500	478	750	650	1619	//	1785	247	260	360	533	629	744	870	1025	1011	1130	1343
600	560	750	650	1870	//	2015	247	260	360	582	695	855	970	1200	1144	1485	1593
800	805	940	790	1840	1880	2067	265	278	378	584	690	762	918	1115	1115	1442	1541
1000	946	940	790	2130	2165	2329	265	284	384	656	787	953	1145	1388	1309	1588	1831
1500	1454	1100	950	2250	//	2505	313	336	432	736	845	1006	1236	1396	1377	1783	1909

Net volume data according to EN 15332 available on product label.

MACS® ELECTRONIC MODULE FOR IMMEDIATE D.H.W. PRODUCTION

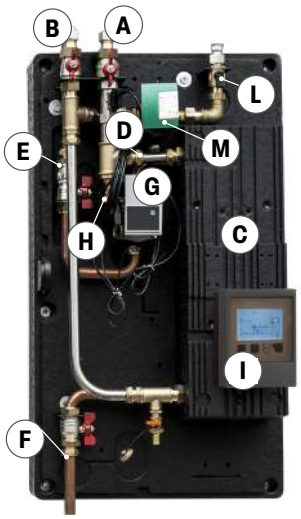

A	Domestic hot water outlet (ACS)
B	Domestic cold water circuit inlet
C	Stainless steel plate exchanger
D	Flow rate/ temperature probe
E	Primary circuit inlet
F	Primary circuit outlet
G	"Energy Savings" circulation Pump
H	Valves In/Out for DHW
I	Electronic control unit

DHW recirculation kit for MACS® module (optional)	
L	Connection for D.H.W. recirculation (optional)
M	D.H.W. recirculation pump (optional)

The MACS® module is an external unit that immediately produces D.H.W., using the heat energy stored in the Buffer thanks to the stainless steel plate exchanger, granting safety and comfort with the possibility to regulate outlet temperature.
With the new electronic regulation system, the management of the temperature on the DHW side is guaranteed and maintained in an optimal manner and with immediate response times from the electronic control unit on the module.

FOR DHW FLOW RATE CHARTS REFER TO HYDRONIC SECTION - ELECTRONIC MACS® MODULE

Products designed and manufactured for using within temperature and pressure limits in accordance to Art. 4.3 Directive 2014/68/EU (P.E.D.)

PUFFERMAS® 3

HEATING WATER BUFFER TANK WITH 2 FIXED HEAT EXCHANGERS AND MACS® MODULE FOR IMMEDIATE D.H.W. PRODUCTION



APPLICATION
Stratified storage of technical water and instantaneous production of domestic hot water (DHW) with high flow rates.

MATERIAL
Mild steel painted on the outside. Buffer intented for closed circuit installation, so no anti-corrosion treatment is provided.

D.H.W. HEAT EXCHANGER
External MACS® module with Stainless steel 316L brazed plate exchanger for immediate D.H.W. production.

HEATING WATER HEAT EXCHANGER
Nr. 2 fixed heat exchangers suitable for solar thermal systems.

TECHNICAL DESCRIPTION
The immediate and fast production of D.H.W. granted by the MACS® module allows the following benefits:
- to reduce dimensions of the water heater needed
- easy maintenance
- maximum hygiene for anti-legionellosis bacteria's
- to produce more DHW than the quantity obtained by boiler with similar capacity because hot water is stored at a higher temperature than DHW.

INSULATION
Buffer tank: High thermal insulation with ecological hard polyurethane foam. Models 800-1000 available with dismountable hard foam insulation.
MACS® module: insulating PPE cover.
Grey PVC external lining.

WARRANTY
5 years (tank). See general sales conditions and warranty for electrical parts.

ACCESSORIES AND SPARE PARTS
See Accessories section for the entire list.

IMMEDIATE DHW PRODUCTION

Dismountable insulation

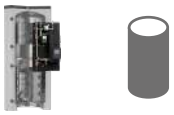

PUFFERMAS® 3 VB
HARD FOAM INSULATION

Model	MACS® Module	Art. Nr.	Heat exchanger surface Upper [m²]	Heat exchanger surface Lower [m²]	ErP ENERGY EFFICIENCY CLASS
500	70	3251162314843	1,3	1,9	C
600	70	3251162314844	1,3	2,1	C
800	70	3251162314845	1,8	2,5	B
1000	70	3251162314846	2,5	3,1	C
1500	70	3251162314847	2,8	3,8	C
1000	120	3251162314848	2,5	3,1	C
1500	120	3251162314849	2,8	3,8	C

Model	MACS® Module	DHW production (10-45°C) with accumulation at 80°C [lt/min]	Maximum availability of DHW (10-45°C) with accumulation at 80°C [lt]
500	70	37	680
600	70	37	800
800	70	37	1150
1000	70	37	1350
1500	70	37	2080
1000	120	61	1680
1500	120	61	2580

ACCESSORIES

Thermometer

Art. Nr.
5032240000107
5 units box



Recirculation kit

Art. Nr.
5221000000073
DHW recirculation group



Buffer tanks connecting kit

Art. Nr.	Connection
5006170001001	1" 1/2
Stainless steel extensible connecting kit - (200 ÷ 400 mm)	



Products designed and manufactured for using within temperature and pressure limits in accordance to Art. 4.3 Directive 2014/68/EU (P.E.D.)

PUFFERMAS® 3

HEATING WATER BUFFER TANK WITH 2 FIXED HEAT EXCHANGERS AND MACS® MODULE FOR IMMEDIATE D.H.W. PRODUCTION

STORAGE		FIXED HEAT EXCHANGER		HEAT EXCHANGER STAINLESS STEEL PLATES (MACS®)		DHW HARDNESS
Pmax	Tmax	Pmax	Tmax	Pmax	Tmax	F max
4 bar	99 °C	12 bar	110 °C	10 bar	99 °C	30 °f

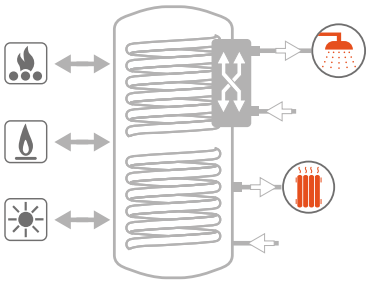

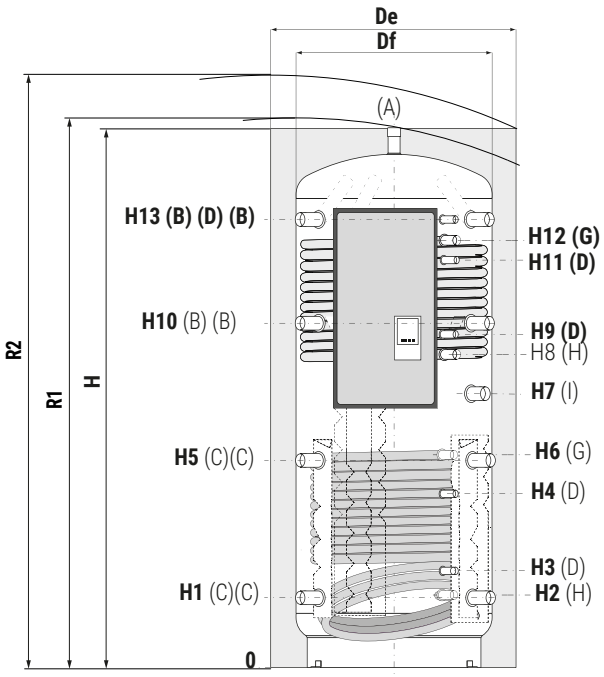

A	Heating delivery/from generator/Air purge G 1"1/2 F
B	Heating delivery/from generator G 1"1/2 F
C	Heating return/to generator G 1"1/2 F
D	Instrumentation G 1/2" F
G	Fixed heat exchanger inlet G 1" F
H	Fixed heat exchanger outlet G 1" F
I	Connection for electric immersion heater G 1"1/2 F
L	Domestic hot water outlet G 3/4" M (G 1" M for models 120kW)
M	Domestic cold water circuit inlet G 3/4" M (G 1" M for models 120kW)

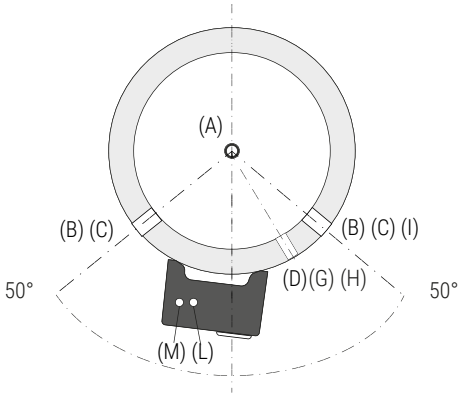

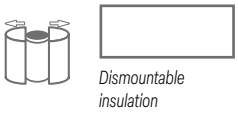

Dismountable insulation

Model	Volume	De	Df	H	R1	R2	H1	H2	H3	H4	H5	H6	H7	H8	H9	H10	H11	H12	H13
	[lt]	[mm]																	
500	478	750	650	1619	//	1785	247	260	360	533	629	744	870	930	1025	1011	1130	1231	1343
600	560	750	650	1870	//	2015	247	260	360	582	695	855	970	1090	1200	1144	1485	1391	1593
800	805	940	790	1840	1880	2067	265	278	378	584	690	762	918	1003	1115	1115	1442	1347	1541
1000	946	940	790	2130	2165	2329	265	284	384	656	787	953	1145	1188	1388	1309	1588	1661	1831
1500	1454	1100	950	2250	//	2505	313	336	432	736	845	1006	1236	1286	1396	1377	1783	1673	1909

Net volume data according to EN 15332 available on product label.

MACS® ELECTRONIC MODULE FOR IMMEDIATE D.H.W. PRODUCTION

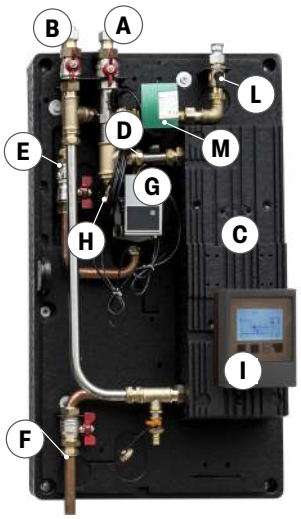

A	Domestic hot water outlet (ACS)
B	Domestic cold water circuit inlet
C	Stainless steel plate exchanger
D	Flow rate/ temperature probe
E	Primary circuit inlet
F	Primary circuit outlet
G	"Energy Savings" circulation Pump
H	Valves In/Out for DHW
I	Electronic control unit

DHW recirculation kit for MACS® module (optional)	
L	Connection for D.H.W. recirculation (optional)
M	D.H.W. recirculation pump (optional)

FOR DHW FLOW RATE CHARTS REFER TO HYDRONIC SECTION - ELECTRONIC MACS® MODULE

The MACS® module is an external unit that immediately produces D.H.W., using the heat energy stored in the Buffer thanks to the stainless steel plate exchanger, granting safety and comfort with the possibility to regulate outlet temperature.
With the new electronic regulation system, the management of the temperature on the DHW side is guaranteed and maintained in an optimal manner and with immediate response times from the electronic control unit on the module.

Products designed and manufactured for using within temperature and pressure limits in accordance to Art. 4.3 Directive 2014/68/EU (P.E.D.)

PUFFERMAS® **2 CTS**

HEATING WATER BUFFER TANK WITH STRATIFICATION DEVICE, 1 FIXED HEAT EXCHANGER AND MACS® MODULE FOR IMMEDIATE D.H.W. PRODUCTION



APPLICATION
Stratified storage of technical water and instantaneous production of domestic hot water (DHW) with high flow rates.

MATERIAL
Mild steel painted on the outside. Buffer intented for closed circuit installation, so no anti-corrosion treatment is provided.

D.H.W. HEAT EXCHANGER
External MACS® module with Stainless steel 316L brazed plate exchanger for immediate D.H.W. production.

HEATING WATER HEAT EXCHANGER
Nr. 1 fixed heat exchanger and CTS® stratificator system, suitable for solar thermal systems.

TECHNICAL DESCRIPTION
The immediate and fast production of D.H.W. granted by the MACS® module allows the following benefits:
- to reduce dimensions of the water heater needed
- easy maintenance
- maximum hygiene for anti-legionellosis bacteria's
- to produce more DHW than the quantity obtained by calorifier with similar capacity because hot water is stored at a higher temperature than DHW.

Puffermas 2 CTS® is characterized by multiple thermal stratification system based on the combination of Cordivari Labyrinth spreader for returning heating water (both from heating installation and from MACS® DHW station) with a new stratification device that conveys in the upper part of the tank the heated water up by the lower fixed exchanger. This combination ensures a perfect natural stratification inside the tank with no valve or additional external device.
The lower fixed exchanger can be connected with a solar system. Being positioned at the bottom lower part of the buffer tank and with very small footprint, it increases the volume available for the storage.

INSULATION
Buffer tank: High thermal insulation with ecological hard polyurethane foam. Models 800-1000 available with dismountable hard foam insulation.
MACS® module: insulating PPE cover.
Grey PVC external lining.

WARRANTY
5 years (tank). See general sales conditions and warranty for electrical parts.

ACCESSORIES AND SPARE PARTS
See Accessories section for the entire list.

IMMEDIATE DHW PRODUCTION

Dismountable insulation





PUFFERMAS® 2 CTS VB
HARD FOAM INSULATION

Model	MACS® Module	Art. Nr.	Heat exchanger surface [m²]	ErP ENERGY EFFICIENCY CLASS
500	70	3251162316503	1,9	C
600		3251162316504	2,1	C
800		3251162316505	2,5	B
1000		3251162316506	3,1	C
1500		3251162316507	3,8	C
1000	120	3251162316508	3,1	C
1500		3251162316509	3,8	C

Model	MACS® Module	DHW production (10-45°C) with accumulation at 80°C [lt/min]	Maximum availability of DHW (10-45°C) with accumulation at 80°C [lt]
500	70	37	680
600		37	800
800		37	1150
1000		37	1350
1500		37	2080
1000	120	61	1680
1500		61	2580

ACCESSORIES

Thermometer

Art. Nr.
5032240000107
5 units box



Recirculation kit

Art. Nr.
5221000000073
DHW recirculation group



Buffer tanks connecting kit

Art. Nr.	Connection
5006170001001	1" 1/2
Stainless steel extensible connecting kit - (200 ÷ 400 mm)	



Products designed and manufactured for using within temperature and pressure limits in accordance to Art. 4.3 Directive 2014/68/EU (P.E.D.)

PUFFERMAS® **2 CTS**

HEATING WATER BUFFER TANK WITH STRATIFICATION DEVICE, 1 FIXED HEAT EXCHANGER AND MACS® MODULE FOR IMMEDIATE D.H.W. PRODUCTION

STORAGE		FIXED HEAT EXCHANGER		HEAT EXCHANGER STAINLESS STEEL PLATES (MACS®)		DHW HARDNESS
Pmax	Tmax	Pmax	Tmax	Pmax	Tmax	F max
4 bar	99 °C	12 bar	110 °C	10 bar	99 °C	30 °f

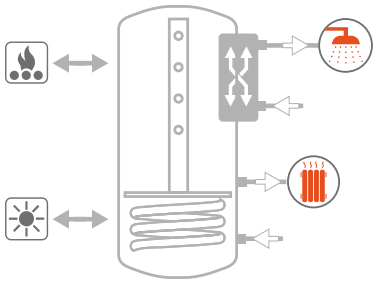

See TECHNICAL SUPPORT chapter for example of installation

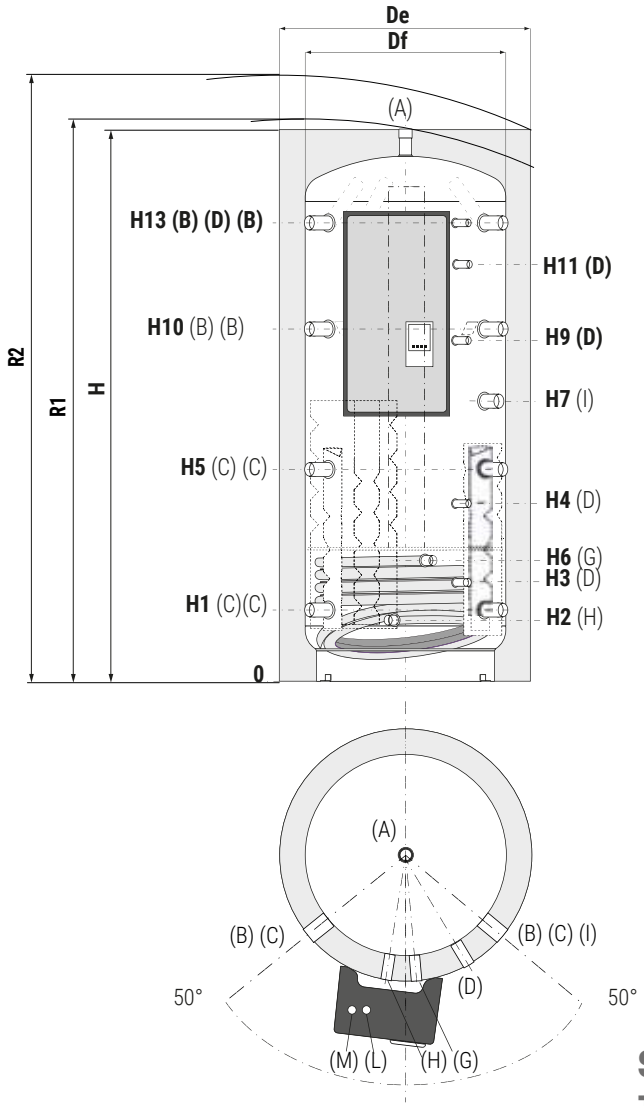

A	Heating delivery/from generator/Air purge G 1"1/2 F
B	Heating delivery/from generator G 1"1/2 F
C	Heating return/to generator G 1"1/2 F
D	Instrumentation G 1/2" F
G	Fixed heat exchanger inlet G 1" F
H	Fixed heat exchanger outlet G 1" F
I	Connection for electric immersion heater G 1"1/2 F
L	Domestic hot water outlet G 3/4" M (G 1" M for models 120kW)
M	Domestic cold water circuit inlet G 3/4" M (G 1" M for models 120kW)

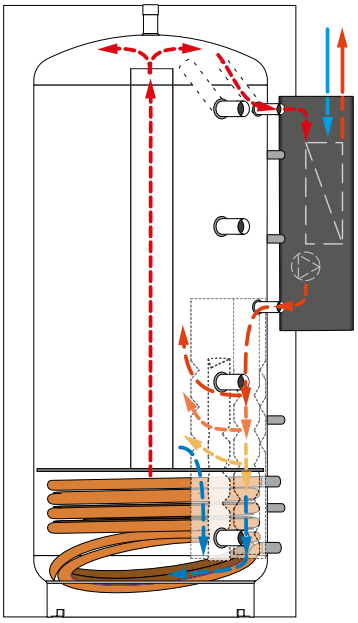

SUITABLE FOR SOLAR THERMAL SYSTEMS

THE ILLUSTRATION UNDERLINES THE STRATIFICATION PROCESS (FROM TOP TO BOTTOM) THAT ALLOWS TO HAVE ALL NEEDED ENERGY RAPIDLY AVAILABLE



Dismountable insulation

Model	Volume	De	Df	H	R1	R2	H1	H2	H3	H4	H5	H6	H7	H8	H9	H10	H11	H12	H13
	[lt]	[mm]																	
500	478	750	650	1619	//	1785	247	215	360	533	629	425	870	//	1025	1011	1130	//	1343
600	560	750	650	1870	//	2015	247	215	360	582	695	425	970	//	1200	1144	1485	//	1593
800	805	940	790	1840	1880	2067	265	233	378	584	690	443	918	//	1115	1115	1442	//	1541
1000	946	940	790	2130	2165	2329	265	233	384	656	787	443	1145	//	1388	1309	1588	//	1831
1500	1454	1100	950	2250	//	2505	313	281	432	736	845	491	1236	//	1396	1377	1783	//	1909

Net volume data according to EN 15332 available on product label.

Products designed and manufactured for using within temperature and pressure limits in accordance to Art. 4.3 Directive 2014/68/EU (P.E.D.)

PUFFERMAS® **3 CTS**

HEATING WATER BUFFER TANK WITH STRATIFICATION DEVICE, 2 FIXED HEAT EXCHANGERS AND MACS® MODULE FOR IMMEDIATE D.H.W. PRODUCTION



APPLICATION
Storage of heating hot water with stratification device and D.H.W immediate production with high flow rate. Ideal for solar thermal solutions and for heating systems with mixed energy sources such as biomass and solar and even allowing the integration of a third energy source.

MATERIAL
Mild steel painted on the outside. Buffer intented for closed circuit installation, so no anti-corrosion treatment is provided.

D.H.W. HEAT EXCHANGER
External MACS® module with Stainless steel 316L brazed plate exchanger for immediate D.H.W. production.

HEATING WATER HEAT EXCHANGER
Nr. 2 fixed heat exchangers and CTS® stratificator system, suitable for solar thermal systems and other generator..

TECHNICAL DESCRIPTION
The immediate and fast production of D.H.W. granted by the MACS® module allows the following benefits:
- to reduce dimensions of the water heater needed
- easy maintenance
- maximum hygiene for anti-legionellosis bacteria's
- to produce more DHW than the quantity obtained by calorifier with similar capacity because hot water is stored at a higher temperature than DHW.

Puffermas 3 CTS® is characterized by multiple thermal stratification system based on the combination of Cordivari Labyrinth spreader for returning heating water (both from heating installation and from MACS® DHW station) with a new stratification device that conveys in the upper part of the tank the heated water up by the lower fixed coil. This combination ensures a perfect natural stratification inside the tank with no valve or additional external device.
The lower fixed coil allows the possibility of connecting with a solar system. Being positioned at the bottom lower part of the buffer tank and with very small footprint, it increases the volume available for the storage. Puffermas® 3 CTS is able to integrate the use of a third separate heat source in addition to solar and biomass.

INSULATION
Buffer tank: High thermal insulation with ecological hard polyurethane foam. Models 800-1000 available with dismountable hard foam insulation.
MACS® module: insulating PPE cover.
Grey PVC external lining.

WARRANTY
5 years (tank). See general sales conditions and warranty for electrical parts.

ACCESSORIES AND SPARE PARTS
See Accessories section for the entire list.

IMMEDIATE DHW PRODUCTION

Dismountable insulation



PUFFERMAS® 3 CTS VB
HARD FOAM INSULATION

Model	MACS® Module	Art. Nr.	Heat exchanger surface [m²] Upper	Lower	ErP ENERGY EFFICIENCY CLASS
500	70	3251162316543	1,3	1,9	C
600		3251162316544	1,3	2,1	C
800		3251162316545	1,8	2,5	B
1000		3251162316546	2,5	3,1	C
1500		3251162316547	2,8	3,8	C
1000	120	3251162316548	2,5	3,1	C
1500		3251162316549	2,8	3,8	C

Model	MACS® Module	DHW production (10-45°C) with accumulation at 80°C [lt/min]	Maximum availability of DHW (10-45°C) with accumulation at 80°C [lt]
500	70	37	680
600		37	800
800		37	1150
1000		37	1350
1500		37	2080
1000	120	61	1680
1500		61	2580

Model	MACS® Module	DHW production (10-45°C) with accumulation T≥ 60 °C [lt/min]	Maximum availability of DHW (10-45°C) with accumulation at 60°C [lt]
800	180 HP	50	970
1000		50	1140
1500		50	1740

ACCESSORIES

Thermometer

Art. Nr.
5032240000107
5 units box



Recirculation kit

Art. Nr.
5221000000073
DHW recirculation group



Buffer tanks connecting kit

Art. Nr.	Connection
5006170001001	1" 1/2
Stainless steel extensible connecting kit - (200 ÷ 400 mm)	



Products designed and manufactured for using within temperature and pressure limits in accordance to Art. 4.3 Directive 2014/68/EU (P.E.D.)

PUFFERMAS® **3 CTS**

HEATING WATER BUFFER TANK WITH STRATIFICATION DEVICE, 2 FIXED HEAT EXCHANGERS AND MACS® MODULE FOR IMMEDIATE D.H.W. PRODUCTION

STORAGE		FIXED HEAT EXCHANGER		HEAT EXCHANGER STAINLESS STEEL PLATES (MACS®)		DHW HARDNESS
Pmax	Tmax	Pmax	Tmax	Pmax	Tmax	F max
4 bar	99 °C	12 bar	110 °C	10 bar	99 °C	30 °f

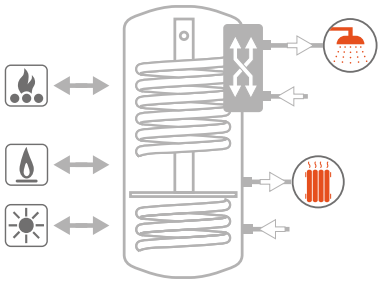

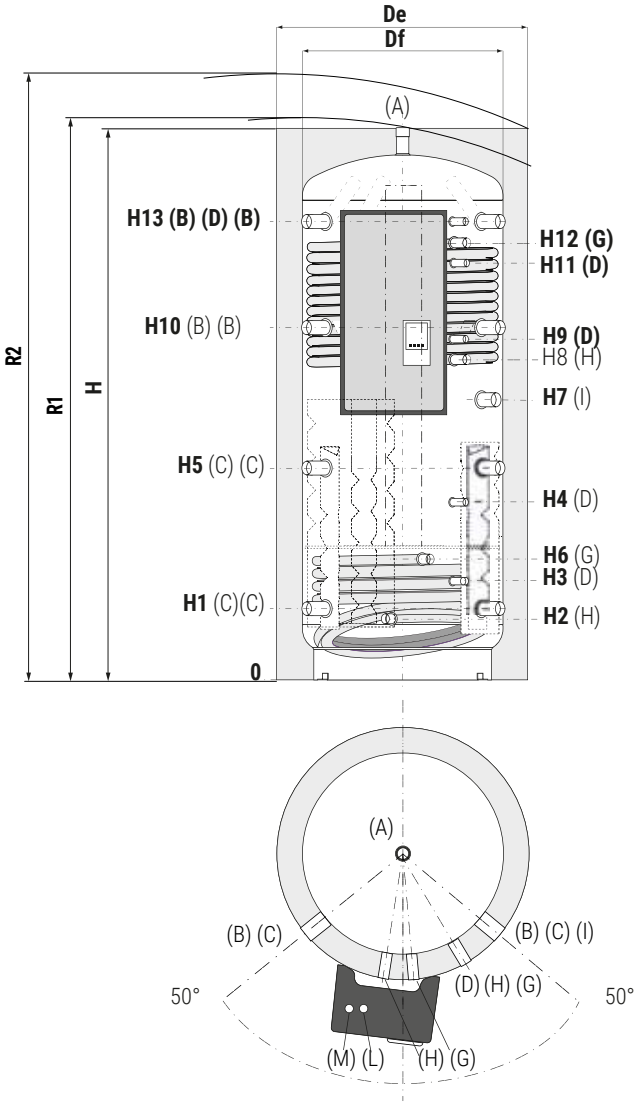

A	Heating delivery/from generator/Air purge G 1"1/2 F
B	Heating delivery/from generator G 1"1/2 F
C	Heating return/to generator G 1"1/2 F
D	Instrumentation G 1/2" F
G	Fixed heat exchanger inlet G 1" F
H	Fixed heat exchanger outlet G 1" F
I	Connection for electric immersion heater G 1"1/2 F
L	Domestic hot water outlet G 3/4" M (G 1" M for models 120kW)
M	Domestic cold water circuit inlet G 3/4" M (G 1" M for models 120kW)

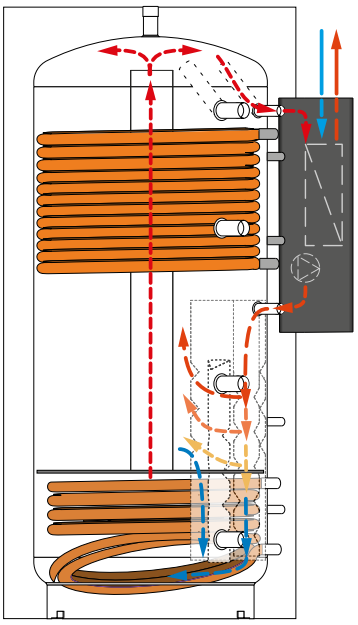

SUITABLE FOR SOLAR THERMAL SYSTEMS

THE ILLUSTRATION UNDERLINES THE STRATIFICATION PROCESS (FROM TOP TO BOTTOM) THAT ALLOWS TO HAVE ALL NEEDED ENERGY RAPIDLY AVAILABLE



Dismountable insulation

Model	Volume	De	Df	H	R1	R2	H1	H2	H3	H4	H5	H6	H7	H8	H9	H10	H11	H12	H13
	[lt]	[mm]																	
500	478	750	650	1619	//	1785	247	215	360	533	629	425	870	930	1025	1011	1130	1231	1343
600	560	750	650	1870	//	2015	247	215	360	582	695	425	970	1090	1200	1144	1485	1391	1593
800	805	940	790	1840	1880	2067	265	233	378	584	690	443	918	1003	1115	1115	1442	1347	1541
1000	946	940	790	2130	2165	2329	265	233	384	656	787	443	1145	1188	1388	1309	1588	1661	1831
1500	1454	1100	950	2250	//	2505	313	281	432	736	845	491	1236	1286	1396	1377	1783	1673	1909

Net volume data according to EN 15332 available on product label.

Products designed and manufactured for using within temperature and pressure limits in accordance to Art. 4.3 Directive 2014/68/EU (P.E.D.)

CORDIVARI

PUFFERMAS® **2 CTS POWER**

HEATING WATER BUFFER TANK WITH STRATIFICATION DEVICE, 1 FIXED HEAT EXCHANGER, MACS® MODULE FOR IMMEDIATE D.H.W. PRODUCTION AND INTEGRATED SOLAR STATION



APPLICATION
Storage by stratification of heating water, immediate production of domestic hot water (DHW) with high flow rates and performances and management of the solar circulation, in solar thermal system / biomass boiler.

MATERIAL
Mild steel painted on the outside. Buffer intented for closed circuit installation, so no anti-corrosion treatment is provided.

D.H.W. HEAT EXCHANGER
External MACS® module with Stainless steel 316L brazed plate exchanger for immediate D.H.W. production.

SOLAR STATION:
Complete with electronic control unit with 5 temperatures probes able to manage up to 27 types of system and complete circulation group.

HEATING WATER HEAT EXCHANGER
Nr. 1 fixed heat exchanger and CTS® stratificator system, suitable for solar thermal systems.

TECHNICAL DESCRIPTION
Specific for accumulation and management of the heat produced by the thermal solar system, combines the use of the Puffer's characteristics with the ones of a fast DHW producer without the storage of domestic hot water, with the following advantages:
- to reduce dimensions of the needed water heater
- easy maintenance
- maximum hygiene for anti-legionellosis bacteria's
- to produce more DHW than the quantity obtained by boiler with similar capacity because hot water is stored at a higher temperature than DHW.

INSULATION
Buffer tank: High thermal insulation with ecological hard polyurethane foam. Models 800-1000 available with dismountable hard foam insulation.
MACS® module: insulating PPE cover.
Grey PVC external lining.

WARRANTY
5 years (tank). See general sales conditions and warranty for electrical parts.

ACCESSORIES AND SPARE PARTS
See Accessories section for the entire list.





Dismountable insulation

	Model	MACS® Module	Art. Nr.	Heat exchangers surface [m²]	ErP ENERGY EFFICIENCY CLASS
PUFFERMAS® 2 CTS POWER VB HARD FOAM INSULATION	**500**	70	3251162316523	1,9	C
	600		3251162316524	2,1	C
	800		3251162316525	2,5	B
	1000		3251162316526	3,1	C
	1500		3251162316527	3,8	C
	1000	120	3251162316528	3,1	C
	1500		3251162316529	3,8	C

Model	MACS® Module	DHW production (10-45°C) with accumulation at 80°C [lt/min]	Maximum availability of DHW (10-45°C) with accumulation at 80°C [lt]
500	70	37	680
600		37	800
800		37	1150
1000		37	1350
1500		37	2080
1000	120	61	1680
1500		61	2580

ACCESSORIES

Thermometer

Art. Nr.
5032240000107
5 units box



Recirculation kit

Art. Nr.
5221000000073
DHW recirculation group



Buffer tanks connecting kit

Art. Nr.	Connection
5006170001001	1" 1/2
Stainless steel extensible connecting kit - (200 ÷ 400 mm)	



Products designed and manufactured for using within temperature and pressure limits in accordance to Art. 4.3 Directive 2014/68/EU (P.E.D.)

PUFFERMAS® **2 CTS POWER**

HEATING WATER BUFFER TANK WITH STRATIFICATION DEVICE, 1 FIXED HEAT EXCHANGER, MACS® MODULE FOR IMMEDIATE D.H.W. PRODUCTION AND INTEGRATED SOLAR STATION

STORAGE		FIXED HEAT EXCHANGER		HEAT EXCHANGER STAINLESS STEEL PLATES (MACS®)		DHW HARDNESS
Pmax	Tmax	Pmax	Tmax	Pmax	Tmax	F max
4 bar	99 °C	12 bar	110 °C	10 bar	99 °C	30 °f

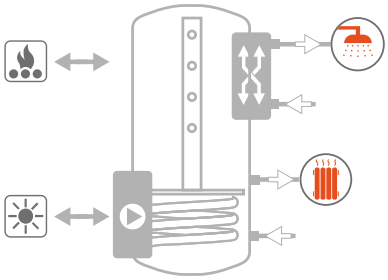

See TECHNICAL SUPPORT chapter for example of installation

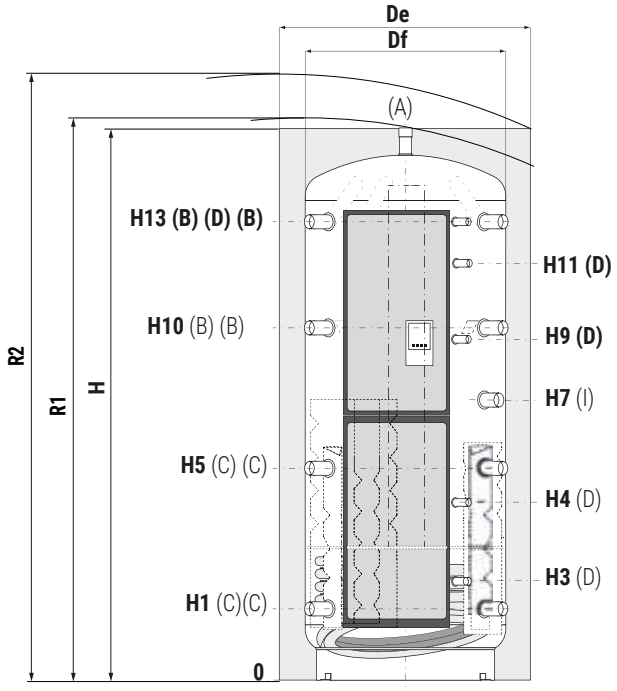

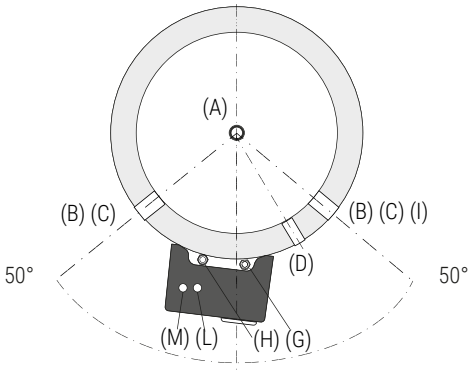

A	Heating delivery/from generator/Air purge G 1"1/2 F
B	Heating delivery/from generator G 1"1/2 F
C	Heating return/to generator G 1"1/2 F
D	Instrumentation G 1/2" F
I	Connection for electric immersion heater G 1"1/2 F
L	Domestic hot water outlet G 3/4" M (G 1" M for models 120kW)
M	Domestic cold water circuit inlet G 3/4" M (G 1" M for models 120kW)

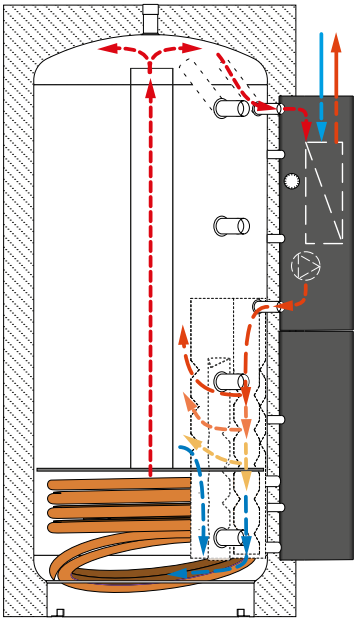

SUITABLE FOR SOLAR THERMAL SYSTEMS

THE ILLUSTRATION UNDERLINES THE STRATIFICATION PROCESS (FROM TOP TO BOTTOM) THAT ALLOWS TO HAVE ALL NEEDED ENERGY RAPIDLY AVAILABLE



Dismountable insulation

Model	Volume	De	Df	H	R1	R2	H1	H3	H4	H5	H7	H9	H10	H11	H13
	[lt]	[mm]													
500	478	750	650	1619	//	1785	247	360	533	629	870	1025	1011	1130	1343
600	560	750	650	1870	//	2015	247	360	582	695	970	1200	1144	1485	1593
800	805	940	790	1840	1880	2067	265	378	584	690	918	1115	1115	1442	1541
1000	946	940	790	2130	2165	2329	265	384	656	787	1145	1388	1309	1588	1831
1500	1454	1100	950	2250	//	2505	313	432	736	845	1236	1396	1377	1783	1909

Net volume data according to EN 15332 available on product label.

Products designed and manufactured for using within temperature and pressure limits in accordance to Art. 4.3 Directive 2014/68/EU (P.E.D.)

PUFFERMAS® **3 CTS POWER**

HEATING WATER BUFFER TANK WITH STRATIFICATION DEVICE, 2 FIXED HEAT EXCHANGERS, MACS® MODULE FOR IMMEDIATE D.H.W. PRODUCTION AND INTEGRATED SOLAR STATION



APPLICATION
Storage by stratification of heating water, immediate production of domestic hot water (DHW) with high flow rates and performances and management of the solar circulation, in solar thermal system / biomass boiler.

MATERIAL
Mild steel painted on the outside. Buffer intented for closed circuit installation, so no anti-corrosion treatment is provided.

D.H.W. HEAT EXCHANGER
External MACS® module with Stainless steel 316L brazed plate exchanger for immediate D.H.W. production.

SOLAR STATION:
Complete with electronic control unit with 5 temperatures probes able to manage up to 27 types of system and complete circulation group.

HEATING WATER HEAT EXCHANGER
Nr. 2 fixed heat exchangers and CTS® stratificator system, suitable for solar thermal systems and other generator.

TECHNICAL DESCRIPTION
Specific for accumulation and management of the heat produced by the thermal solar system, combines the use of the Puffer's characteristics with the ones of a fast DHW producer without the storage of domestic hot water, with the following advantages:
- to reduce dimensions of the needed water heater
- easy maintenance
- maximum hygiene for anti-legionellosis bacteria's
- to produce more DHW than the quantity obtained by boiler with similar capacity because hot water is stored at a higher temperature than DHW.

Puffermas® 3 CTS POWER is able to integrate the use of a third separate heat source in addition to solar and biomass.

INSULATION
Buffer tank: High thermal insulation with ecological hard polyurethane foam. Models 800-1000 available with dismountable hard foam insulation.
MACS® module: insulating PPE cover.
Grey PVC external lining.

WARRANTY
5 years (tank). See general sales conditions and warranty for electrical parts.

ACCESSORIES AND SPARE PARTS
See Accessories section for the entire list.

IMMEDIATE DHW PRODUCTION

Dismountable insulation





PUFFERMAS® 3 CTS VB
HARD FOAM INSULATION

Model	MACS® Module	Art. Nr.	Heat exchanger surface Upper [m²]	Heat exchanger surface Lower [m²]	ENERGY EFFICIENCY CLASS
500	70	3251162316563	1,3	1,9	C
600	70	3251162316564	1,3	2,1	C
800	70	3251162316565	1,8	2,5	B
1000	70	3251162316566	2,5	3,1	C
1500	70	3251162316567	2,8	3,8	C
1000	120	3251162316568	2,5	3,1	C
1500	120	3251162316569	2,8	3,8	C

Model	MACS® Module	DHW production (10-45°C) with accumulation at 80°C [lt/min]	Maximum availability of DHW (10-45°C) with accumulation at 80°C [lt]
500	70	37	680
600	70	37	800
800	70	37	1150
1000	70	37	1350
1500	70	37	2080
1000	120	61	1680
1500	120	61	2580

ACCESSORIES

Thermometer

Art. Nr.
5032240000107
5 units box



Recirculation kit

Art. Nr.
5221000000073
DHW recirculation group



Buffer tanks connecting kit

Art. Nr.	Connection
5006170001001	1" 1/2
Stainless steel extensible connecting kit - (200 ÷ 400 mm)	



Products designed and manufactured for using within temperature and pressure limits in accordance to Art. 4.3 Directive 2014/68/EU (P.E.D.)

PUFFERMAS® **3 CTS POWER**

HEATING WATER BUFFER TANK WITH STRATIFICATION DEVICE, 2 FIXED HEAT EXCHANGERS, MACS® MODULE FOR IMMEDIATE D.H.W. PRODUCTION AND INTEGRATED SOLAR STATION

STORAGE		FIXED HEAT EXCHANGER		HEAT EXCHANGER STAINLESS STEEL PLATES (MACS®)		DHW HARDNESS
Pmax	Tmax	Pmax	Tmax	Pmax	Tmax	F max
4 bar	99 °C	12 bar	110 °C	10 bar	99 °C	30 °f

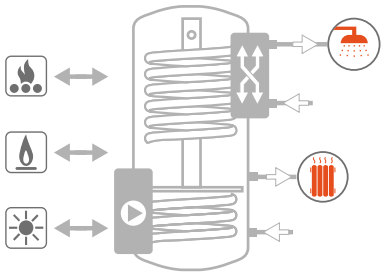

See TECHNICAL SUPPORT chapter for example of installation

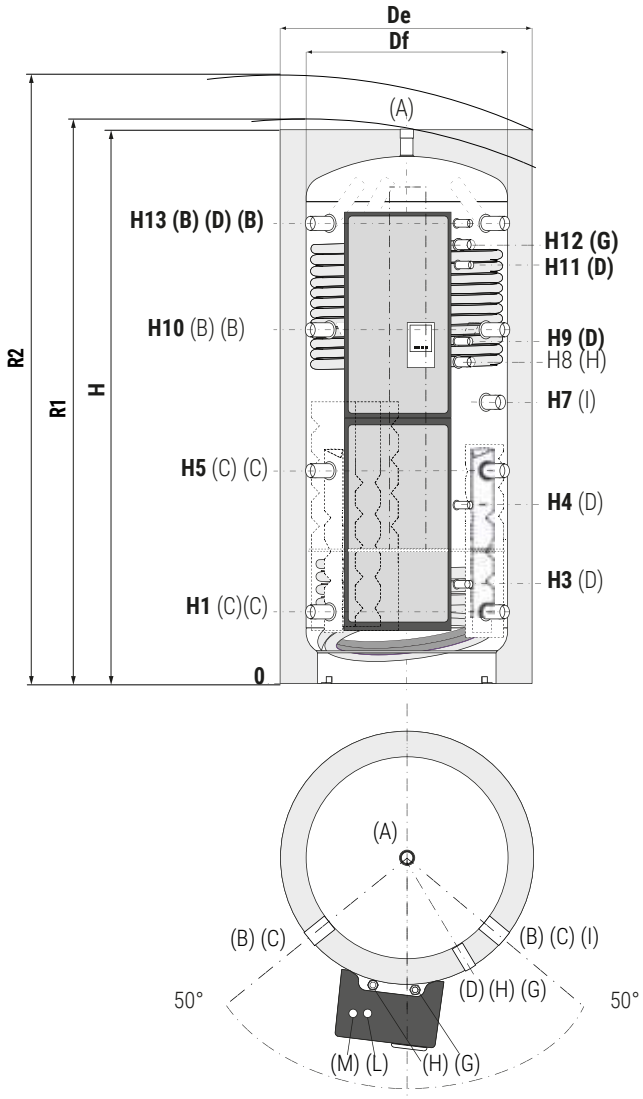

A	Heating delivery/from generator/Air purge G 1"1/2 F
B	Heating delivery/from generator G 1"1/2 F
C	Heating return/to generator G 1"1/2 F
D	Instrumentation G 1/2" F
G	Fixed heat exchanger inlet G 1" F
H	Fixed heat exchanger outlet G 1" F
I	Connection for electric immersion heater G 1"1/2 F
L	Domestic hot water outlet G 3/4" M (G 1" M for models 120kW)
M	Domestic cold water circuit inlet G 3/4" M (G 1" M for models 120kW)

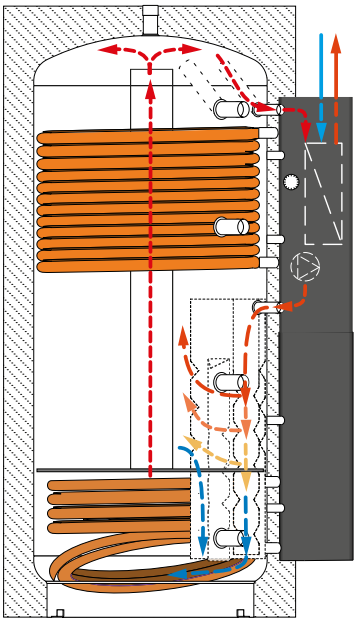

SUITABLE FOR SOLAR THERMAL SYSTEMS

THE ILLUSTRATION UNDERLINES THE STRATIFICATION PROCESS (FROM TOP TO BOTTOM) THAT ALLOWS TO HAVE ALL NEEDED ENERGY RAPIDLY AVAILABLE



Dismountable insulation

Model	Volume	De	Df	H	R1	R2	H1	H3	H4	H5	H7	H8	H9	H10	H11	H12	H13
	[lt]	[mm]															
500	478	750	650	1619	//	1785	247	360	533	629	870	930	1025	1011	1130	1231	1343
600	560	750	650	1870	//	2015	247	360	582	695	970	1090	1200	1144	1485	1391	1593
800	805	940	790	1840	1880	2067	265	378	584	690	918	1003	1115	1115	1442	1347	1541
1000	946	940	790	2130	2165	2329	265	384	656	787	1145	1188	1388	1309	1588	1661	1831
1500	1454	1100	950	2250	//	2505	313	432	736	845	1236	1286	1396	1377	1783	1673	1909

Net volume data according to EN 15332 available on product label.

Products designed and manufactured for using within temperature and pressure limits in accordance to Art. 4.3 Directive 2014/68/EU (P.E.D.)

BUFFER TANK FOR HEAT PUMP & CHILLED WATER STORAGE RANGE









	MILD STEEL	POLYWARM®	STAINLESS STEEL	STAINLESS STEEL / MILD STEEL	MILD STEEL	POLYWARM®	MILD STEEL
Model	VOLANO UP Mild steel	VOLANO UP (clean systems)	VOLANO UP Stainless steel	VOLANO CUBE	VOLANO BS	VOLANO BS (clean systems)	VOLANO BS HOT/COLD
Page nr.	364	366	368	372	374	376	378
Material and internal finishing	Mild steel	Polywarm® Coating	Stainless steel	Mild steel / Stainless steel	Mild steel	Polywarm® Coating	Mild steel
Insulation	Polyurethane Hard Foam	Polyurethane Hard Foam	Polyurethane Hard Foam	Polyurethane Hard Foam	Polyurethane Hard Foam	Polyurethane Hard Foam	Anti-condensation expanded polyethylene + polyester fiber
External lining	• Soft PVC • Rigid Technopolymer • Anti-corrosion metal sheet	• Soft PVC • Rigid Technopolymer • Anti-corrosion metal sheet	• Soft PVC • Rigid Technopolymer • Anti-corrosion metal sheet	• Anti-corrosion metal sheet	• Soft PVC	• Soft PVC	• Soft PVC
Positioning	INDOOR / OUTDOOR	INDOOR / OUTDOOR	INDOOR / OUTDOOR	INDOOR / OUTDOOR	INDOOR	INDOOR	INDOOR
Temperature and pressures	-10 / +95 °C 6 bar	-10 / +90 °C 6 bar	-10 / +95 °C 6 bar	-10 / +95 °C 6 bar	-10 / +95 °C 4 bar	-10 / +95 °C 4 bar	-10 / +90 °C 7 bar
Application	Hot/Cold	Hot/Cold	Hot/Cold	Hot/Cold	Hot/Cold	Hot/Cold	Hot/Cold
Energy efficiency class	**A-B**	**A-B**	**B**	**B-C**	**B-C**	**B-C**	**C**
Available range	8 ÷ 100	25 ÷ 100	25 ÷ 100	50 ÷ 80	100 ÷ 1000	100 ÷ 1000	500 ÷ 5000
Installation	Wall-mounted	Wall-mounted	Wall-mounted	Wall-mounted	Floor-standing	Floor-standing	Floor-standing
Suggested Application	Domestic Heat Pumps Heating/ Cooling	Domestic Heat Pumps Heating/ Cooling	Domestic Heat Pumps Heating/ Cooling	Domestic Heat Pumps Heating/ Cooling	Heat pump Heating/Cooling	Heat pump Heating/Cooling	Large-Scale Chiller Systems – VRV / VRF Technologies









NEW	NEW					
MILD STEEL	MILD STEEL	MILD STEEL	POLYWARM®	STAINLESS STEEL	GALVANIZED	GALVANIZED / MILD STEEL
VOLANO BS REVERSO FLANGED	VOLANO BS REVERSO	VOLANO BS COOLING-HEATING	VOLANO BS COOLING-HEATING	VOLANO BS COOLING-HEATING	CHILLED WATER STORAGE TANK ZBL	CHILLED WATER STORAGE TANK GC
380	382	386	388	390	392	394
Mild steel	Mild steel	Mild steel	Polywarm® Coating	Stainless steel	Mild steel with hot-dip galvanization	Mild steel / Mild steel with hot-dip galvanization
Anti-condensation insulation + polyester fibre	Anti-condensation insulation + polyester fibre Polyurethane Hard Foam	Polyurethane Hard Foam	Polyurethane Hard Foam	Polyurethane Hard Foam	Polyurethane Hard Foam	Anti-condensation expanded polyethylene
• Soft PVC	• Aluminium metal sheet • Painted metal sheet	• Painted metal sheet	• Painted metal sheet	• Painted metal sheet	• Painted metal sheet	• Soft PVC
INDOOR	OUTDOOR	INDOOR / OUTDOOR	INDOOR / OUTDOOR	INDOOR / OUTDOOR	INDOOR / OUTDOOR	INDOOR
-10 / +90 °C 4/7 bar	-10 / +90 °C 4/7 bar	-10 / +90 °C 7 bar	-10 / +90 °C 7 bar	-30 / +90 °C 7 bar	-10 / +60 °C 7 bar	-10 / +90 °C 7 bar
Hot/Cold	Hot/Cold	Hot/Cold	Hot/Cold	Hot/Cold	Cold	Cold
C	**C**	**B-C**	**C**	**C**	**N.A.**	**N.A.**
500 ÷ 5000	500 ÷ 5000	100 ÷ 2000	100 ÷ 1000	100 ÷ 1000	100 ÷ 2000	100 ÷ 5000
Floor-standing	Floor-standing	Floor-standing	Floor-standing	Floor-standing	Floor-standing	Floor-standing
Large-Scale Chiller Systems – VRV / VRF Technologies	Heat pump Heating/Cooling - Large-Scale Systems	Heat pump Heating/Cooling	Heat pump Heating/Cooling	Heat pump Heating/Cooling	- Chillers - Industrial Systems	Chiller Systems – VRV / VRF Technologies

INDEX **BUFFER TANK** FOR HEAT PUMP & **CHILLED WATER STORAGE**



CONNECTIONS	4	4		4			6		4		4		
EXTERNAL LINING	SOFT PVC	SOFT PVC	ANTI-CORROSION METAL SHEET	SOFT PVC	RIGID TECHNO POLYMER	ANTI-CORROSION METAL SHEET	SOFT PVC	RIGID TECHNO POLYMER	SOFT PVC	RIGID TECHNO POLYMER	SOFT PVC	RIGID TECHNO POLYMER	ANTI-CORROSION METAL SHEET
INDOOR INSTALLATION	●	●		●			●		●		●		
OUTDOOR INSTALLATION			●		●	●		●		●		●	●
G	■	■	■	■	■	■	■	■	■	■	■	■	■
W				■	■	■	■	■			■	■	■
X				■	■	■	■	■	■	■	■	■	■
PRESSURE	6 bar												
INSULATION	Polyurethane Hard Foam												
APPLICATION	Hot/Cold												

50lt			80lt					100lt				
												
6		8	4		6		8	4			6	
SOFT PVC	RIGID TECHNO POLYMER	ANTI-CORROSION METAL SHEET	SOFT PVC	RIGID TECHNO POLYMER	SOFT PVC	RIGID TECHNO POLYMER	ANTI-CORROSION METAL SHEET	SOFT PVC	RIGID TECHNO POLYMER	ANTI-CORROSION METAL SHEET	SOFT PVC	RIGID TECHNO POLYMER
												
												

MILD STEEL

POLYWARM®

STAINLESS STEEL

6 bar

Polyurethane Hard Foam



Hot/Cold

FLOOR-STANDING **BUFFER TANK**
FOR HEAT PUMP RANGE GUIDE



BS



BS
HOT/COLD



BS
REVERSO FLANGED



BS
REVERSO

PRESSURE	**4 BAR**	**7 BAR**	**4 / 7 BAR**	**4 / 7 BAR**
CAPACITIES	**100 ÷ 1000**	**500 ÷ 5000**	**500 ÷ 5000**	**500 ÷ 2000**
CONNECTIONS	**6**	**4**	**4**	**4**
EXTERNAL LINING	SOFT PVC	SOFT PVC	SOFT PVC	PAINTED METAL SHEET
INSULATION	POLYURETHANE HARD FOAM	ANTI-CONDENSATION INSULATION + POLYESTER FIBER	ANTI-CONDENSATION INSULATION + POLYESTER FIBER	POLYURETHANE HARD FOAM
INDOOR INSTALLATION				
OUTDOOR INSTALLATION				
G				
W				
X				
Z				
APPLICATION	 Hot/Cold	 Hot/Cold	 Hot/Cold	 Hot/Cold



BS
REVERSO FLANGED



BS
COOLING-HEATING



CHILLED WATER



CHILLED WATER STORAGE TANK VT



CHILLED WATER STORAGE TANK OR

4 / 7 BAR	7 BAR	7 BAR	7 BAR	7 BAR
2500 ÷ 5000	100 ÷ 2000	100 ÷ 2000	100 ÷ 5000	100 ÷ 5000
4	4	4	4	4
ALUMINIUM SHEET	PAINTED METAL SHEET	PAINTED METAL SHEET	SOFT PVC	SOFT PVC
ANTI-CONDENSATION INSULATION + POLYESTER FIBRE	POLYURETHANE HARD FOAM	POLYURETHANE HARD FOAM	ANTI-CONDENSATION EXPANDED POLYETHYLENE	ANTI-CONDENSATION EXPANDED POLYETHYLENE
			MILD STEEL	
			POLYWARM®	
			STAINLESS STEEL	
			GALVANISED	
Hot/Cold	Hot/Cold	Cold	Cold	Cold

VOLANO **UP - MILD STEEL**

HANGING SEPARATOR/BUFFER TANK FOR HEAT PUMP IN MILD STEEL



TECHNICAL DESCRIPTION

Buffers either for hot or cold water have two main functions: they work both as hydraulic separator and buffer tank.
The hydraulic separator makes the heat pump flow rates and terminals flow rates unconnected. The buffer function reduces the heat pump on/off switchings.
Hanging energy buffer tanks are designed for wall installation.

MATERIAL

Mild steel.

EXTERNAL LINING

- VOLANO UP GBF : Grey PVC (for indoor installation).
- VOLANO UP GBP: Technopolymer coating suitable for outdoor installations.
- VOLANO UP GBL : External coating in metal sheet protected by a particular anticorrosive treatment (available for CLASS A models - suitable for outdoor installation).

INSULATION

High thermal insulation with ecological polyurethane hard foam.

WARRANTY

5 years - See general sales conditions and warranty.

MILD STEEL

PROMPT AVAILABILITY

NEW ACCESSORIES* BASE-MOUNTED SUPPORT

4 CONNECTIONS

		Installation type	Model	Art. Nr.	Energy efficiency class
	**VOLANO UP GBF** GREY PVC EXTERNAL LINING	INDOOR	8	3070160920006	B
			12	3070160920004	B
			25	3070160920001	B
			25 Low	3070160920047	B
			50	3070160920003	B
			50 Low	3070160920043	B
			80	3070160920018	B
			100	3070160920019	B
		Quantities (≥12pcs)	8	3070160920006	B
		Quantities (≥12pcs)	12	3070160920004	B
		Quantities (≥20pcs)	25	3070160920001	B
		Quantities (≥10pcs)	50	3070160920003	B
	**VOLANO UP GBP** TECHNOPOLYMER EXTERNAL LINING	OUTDOOR	25	3070160920035	B
			25 Low	3070160920048	B
			50	3070160920036	B
			50 Low	3070160920044	B
			80	3070160920037	B
			100	3070160920038	B
		Quantities (≥10pcs)	50	3070160920036	B
	**VOLANO UP GBL (CLASS A)** METAL SHEET EXTERNAL LINING	OUTDOOR	12	3070160920020	A
			25	3070160920021	A
			50	3070160920022	A
			100	3070160920024	A

6 CONNECTIONS

		Installation type	Model	Art. Nr.	Energy efficiency class
	**VOLANO UP GBF** GREY PVC EXTERNAL LINING	INDOOR	25	3070160920031	B
			50	3070160920032	B
			80	3070160920033	B
			100	3070160920034	B
		Quantities (≥20pcs)	25	3070160920031	B
		Quantities (≥10pcs)	50	3070160920032	B
	**VOLANO UP GBP** TECHNOPOLYMER EXTERNAL LINING	OUTDOOR	25	3070160920039	B
			50	3070160920040	B
			80	3070160920041	B
			100	3070160920042	B

Products designed and manufactured for using within temperature and pressure limits in accordance to Art. 4.3 Directive 2014/68/EU (P.E.D.)

VOLANO **UP - MILD STEEL**

HANGING SEPARATOR/BUFFER TANK FOR HEAT PUMP IN MILD STEEL

PRESSURE	TEMPERATURE
Pmax	Tmin/Tmax
6 bar	-10 / +99 °C

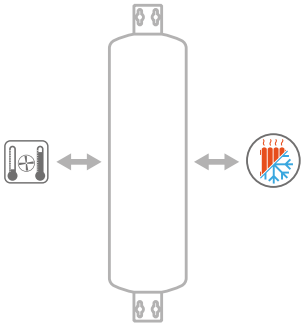

4 CONNECTIONS

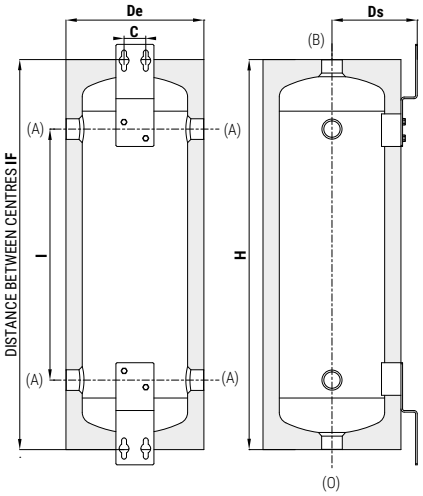

6 CONNECTIONS

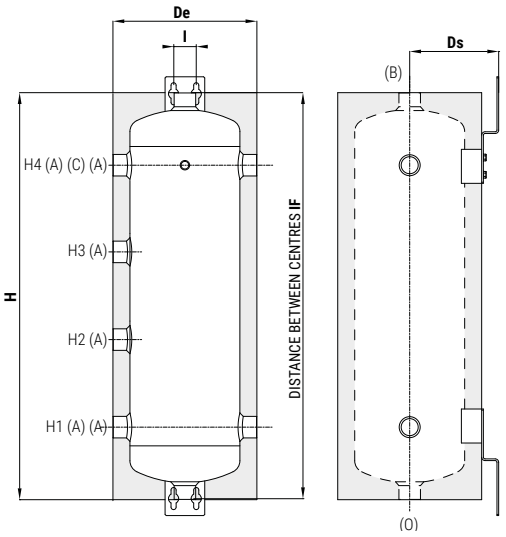

A	To the System
B	Safety Valve
C	Connection for instrumentation 1/2"
O	Drain

VOLANO UP (4 CONNECTIONS)

Model	Volume	Weight	De	Ds	H	I	IF	C	B-O	A
	[lt]	[Kg]				[mm]			Connections F	
8	8,3	6,5	255	149	382	126	378	40	1"	1"
12	12,4	7,5	255	149	526	270	522	40	1"	1"
25	25	11	290	166	790	450	776	40	1"	1"1/4
25 Low	25	9	343	192	535	245	511	40	1"	1"1/4
50	51	16	343	192	1000	600	996	40	1"	1"1/4
50 Low	50	16	450	252	495	150	450	70	1"1/4	1"1/4
80	81	18	450	252	745	395	695	70	1"1/4	1"1/4
100	95	24	450	252	870	525	825	70	1"1/4	1"1/4

VOLANO UP (4 CONNECTIONS) - CLASS A

Model	Volume	Weight	De	Ds	H	I	IF	C	B-O	A
	[lt]	[Kg]				[mm]			Connections F	
12	12,4	13,5	344	193	566	270	562	40	1"	1"
25	25	19,0	340	194	830	450	816	40	1"	1"1/4
50	51	29,0	423	231	1040	600	1038	40	1"	1"1/4
100	95	40,0	550	302	930	525	885	70	1"1/4	1"1/4

VOLANO UP (6 CONNECTIONS)

Model	Volume	Weight	De	H	H1	H2	H3	H4	IF	I	DS	B-O	A
	[lt]	[Kg]					[mm]					Connections F	
25	25	14	290	790	170	320	470	620	776	40	166	1"	1"1/4
50	51	19	343	1000	200	400	600	800	996	40	192	1"	1"1/4
80	80	22	450	745	175	310	440	570	695	70	252	1"1/4	1"1/4
100	95	26	450	875	175	350	525	700	825	70	252	1"1/4	1"1/4

NEW **FLOOR STANDING SUPPORT FOR VOLANO UP RANGE**

Steel floor standing support + fixing screws

Art. Nr.	Suitable for model
5207321100001	25 - 25 low
5207321100002	50
Compatible with any type of external cladding and internal finish.	

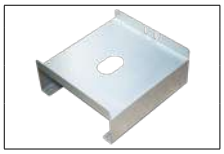

Detail of the fastening





Products designed and manufactured for using within temperature and pressure limits in accordance to Art. 4.3 Directive 2014/68/EU (P.E.D.)

VOLANO **UP - POLYWARM®**

HANGING SEPARATOR/BUFFER TANK FOR HEAT PUMP IN POLYWARM® COATED MILD STEEL



TECHNICAL DESCRIPTION
Buffers either for hot or cold water have two main functions: they work both as hydraulic separator and buffer tank.
The hydraulic separator makes the heat pump flow rates and terminals flow rates unconnected. The buffer function reduces the heat pump on/off switchings.
Hanging energy buffer tanks are designed for wall installation.

MATERIAL
Mild steel Polywarm® coated.

EXTERNAL LINING
- *VOLANO UP WBF* : Grey PVC (for indoor installation).
- *VOLANO UP WBP*: Technopolymer coating suitable for outdoor installations.
- *VOLANO UP WBL* : External coating in metal sheet protected by a particular anticorrosive treatment (available for CLASS A models - suitable for outdoor installation).

INSULATION
High thermal insulation with ecological polyurethane hard foam.

WARRANTY
5 years - See general sales conditions and warranty.

POLYWARM® CLEAN SYSTEMS

NEW ACCESSORIES* BASE-MOUNTED SUPPORT

PROMPT AVAILABILITY

4 CONNECTIONS

	Installation type	Model	Art. Nr.	Energy efficiency class
 **VOLANO UP WBF** GREY PVC EXTERNAL LINING	INDOOR	25	3070160310001	B
		25 low	3070160310032	B
		50	3070160310002	B
		50 low	3070160310005	B
		80	3070160310003	B
		100	3070160310004	B
	Quantities (≥24pcs)	25	3070160310001	B
	Quantities (≥10pcs)	50	3070160310002	B
 **VOLANO UP WBP** TECHNOPOLYMER EXTERNAL LINING	OUTDOOR	25	3070160310020	B
		25 low	3070160310031	B
		50	3070160310021	B
		50 low	3070160310019	B
		80	3070160310022	B
		100	3070160310023	B
 **VOLANO UP WBL (class A)** METAL SHEET EXTERNAL LINING	OUTDOOR	25	3070160310028	A
		50	3070160310029	A
		100	3070160310030	A

6 CONNECTIONS

	Installation type	Model	Art. Nr.	Energy efficiency class
 **VOLANO UP WBF** GREY PVC EXTERNAL LINING	INDOOR	25	3070160310006	B
		50	3070160310007	B
		80	3070160310008	B
		100	3070160310009	B
	Quantities (≥20pcs)	25	3070160310006	B
	Quantities (≥10pcs)	50	3070160310007	B
 **VOLANO UP WBP** TECHNOPOLYMER EXTERNAL LINING	OUTDOOR	25	3070160310024	B
		50	3070160310025	B
		80	3070160310026	B
		100	3070160310027	B

Products designed and manufactured for using within temperature and pressure limits in accordance to Art. 4.3 Directive 2014/68/EU (P.E.D.)

VOLANO **UP - POLYWARM®**

HANGING SEPARATOR/BUFFER TANK FOR HEAT PUMP IN POLYWARM® COATED MILD STEEL

PRESSURE	TEMPERATURE
Pmax	Tmin/Tmax
6 bar	-10 / +90 °C

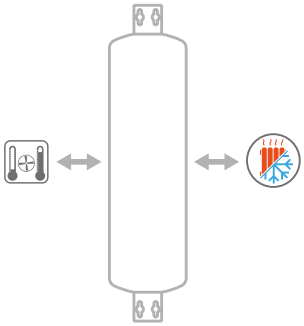

4 CONNECTIONS

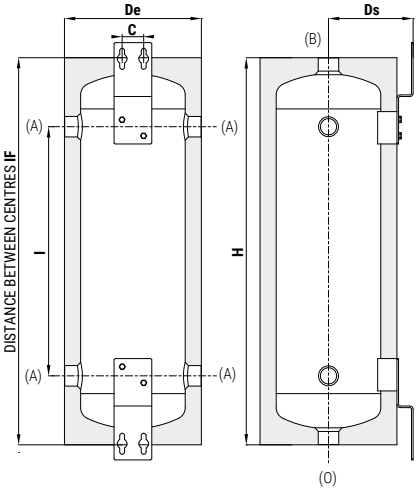

6 CONNECTIONS

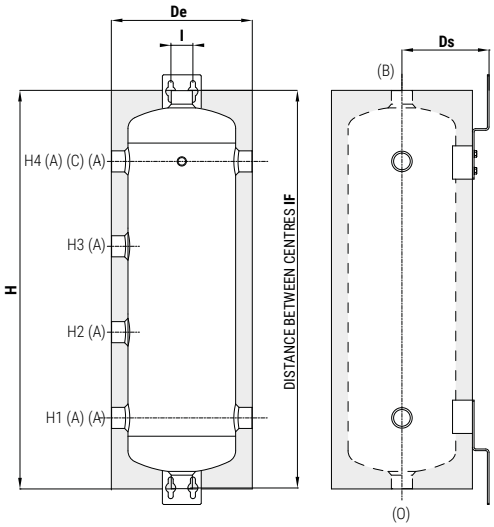

A	To the System
B	Safety Valve
C	Connection for instrumentation 1/2"
O	Drain

VOLANO UP (4 CONNECTIONS)

Model	Volume	Weight	De	Ds	H	I	IF	C	B-O	A
	[lt]	[Kg]			[mm]				Connections F	
25	25	11	290	166	790	450	776	40	1"1/4	1"1/4
25 Low	25	9	343	192	535	245	511	40	1"	1"1/4
50	51	16	343	192	1000	600	996	40	1"1/4	1"1/4
50 Low	50	16	450	252	495	150	450	70	1"1/4	1"1/4
80	81	18	450	252	745	395	695	70	1"1/4	1"1/4
100	95	24	450	252	870	525	825	70	1"1/4	1"1/4

VOLANO UP (4 CONNECTIONS) - CLASS A

Model	Volume	Weight	De	Ds	H	I	IF	C	B-O	A
	[lt]	[Kg]			[mm]				Connections F	
25	25	19,0	340	194	830	450	816	40	1"1/4	1"1/4
50	51	29,0	423	231	1040	600	1038	40	1"1/4	1"1/4
100	95	40,0	550	302	930	525	885	70	1"1/4	1"1/4

VOLANO UP (6 CONNECTIONS)

Model	Volume	Weight	De	H	H1	H2	H3	H4	IF	I	DS	B-O	A
	[lt]	[Kg]					[mm]					Connections F	
25	25	14	290	790	170	320	470	620	776	40	166	1"1/4	1"1/4
50	51	19	343	1000	200	400	600	800	996	40	192	1"1/4	1"1/4
80	80	22	450	745	175	310	440	570	695	70	252	1"1/4	1"1/4
100	95	26	450	875	175	350	525	700	825	70	252	1"1/4	1"1/4

NEW **FLOOR STANDING SUPPORT FOR VOLANO UP RANGE**

Steel floor standing support + fixing screws

Art. Nr.	Suitable for model
5207321100001	25 - 25 low
5207321100002	50
Compatible with any type of external cladding and internal finish.	

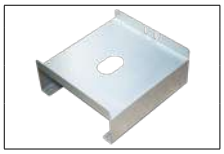

Detail of the fastening





Products designed and manufactured for using within temperature and pressure limits in accordance to Art. 4.3 Directive 2014/68/EU (P.E.D.)

VOLANO **UP - STAINLESS STEEL**

HANGING SEPARATOR/BUFFER TANK FOR HEAT PUMP IN STAINLESS STEEL



NEW ACCESSORIES*
BASE-MOUNTED SUPPORT

TECHNICAL DESCRIPTION
Buffers either for hot or cold water have two main functions: they work both as hydraulic separator and buffer tank.
The hydraulic separator makes the heat pump flow rates and terminals flow rates unconnected. The buffer function reduces the heat pump on/off switchings.
Hanging energy buffer tanks are designed for wall installation.

MATERIAL
Stainless steel.

STAINLESS STEEL

EXTERNAL LINING
- *VOLANO UP XBF* : Grey PVC (for indoor installation).
- *VOLANO UP XBP*: Technopolymer coating suitable for outdoor installations.

INSULATION
High thermal insulation with ecological polyurethane hard foam.

WARRANTY
5 years - See general sales conditions and warranty.

4 CONNECTIONS

		Installation type	Model	Art. Nr.	Energy efficiency class
	**VOLANO UP XBF** GREY PVC EXTERNAL LINING	INDOOR	25	3001012310021	B
			50	3001012310022	B
			50 low	3001012310037	B
			80	3001012310023	B
			100	3001012310024	B
	**VOLANO UP XBP** TECHNOPOLYMER EXTERNAL LINING	OUTDOOR	25	3001012310029	B
			50	3001012310030	B
			50 low	3001012310038	B
			80	3001012310031	B
			100	3001012310032	B

6 CONNECTIONS

		Installation type	Model	Art. Nr.	Energy efficiency class
	**VOLANO UP XBF** GREY PVC EXTERNAL LINING	INDOOR	25	3001012310025	B
			50	3001012310026	B
			80	3001012310027	B
			100	3001012310028	B
	**VOLANO UP XBP** TECHNOPOLYMER EXTERNAL LINING	OUTDOOR	25	3001012310033	B
			50	3001012310034	B
			80	3001012310035	B
			100	3001012310036	B

Products designed and manufactured for using within temperature and pressure limits in accordance to Art. 4.3 Directive 2014/68/EU (P.E.D.)

VOLANO **UP - STAINLESS STEEL**

HANGING SEPARATOR/BUFFER TANK FOR HEAT PUMP IN STAINLESS STEEL

PRESSURE	TEMPERATURE
Pmax	Tmin/Tmax
6 bar	-10 / +95 °C

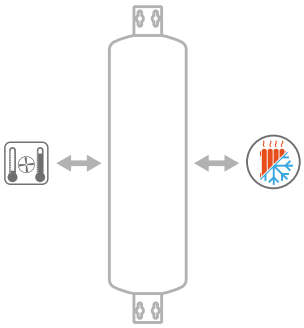

4 CONNECTIONS

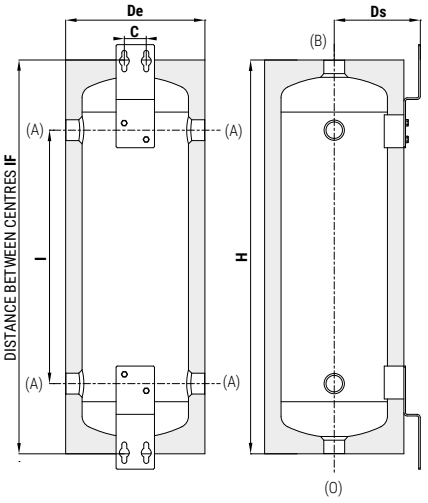

6 CONNECTIONS

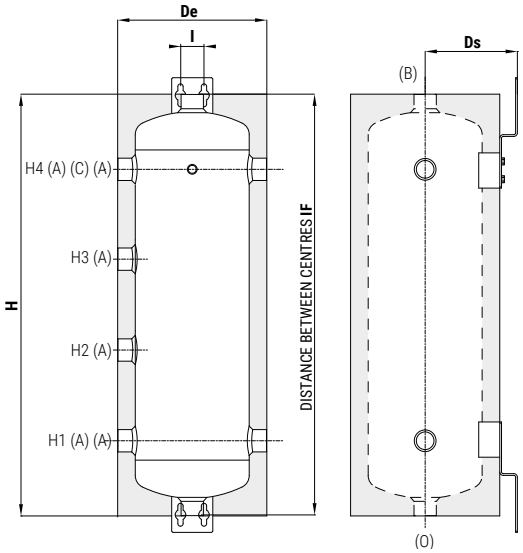

A	To the System
B	Safety Valve
C	Connection for instrumentation 1/2"
O	Drain

VOLANO UP (4 CONNECTIONS)

Model	Volume	Weight	De	Ds	H	I	IF	C	B-O	A
	[lt]	[Kg]				[mm]			Connections F	
25	25	11	290	166	790	450	776	40	1"	1"1/4
50	51	16	343	192	1000	600	996	40	1"	1"1/4
50 Low	50	16	450	252	495	150	450	70	1"1/4	1"1/4
80	81	18	450	252	745	395	695	70	1"1/4	1"1/4
100	95	24	450	252	870	525	825	70	1"1/4	1"1/4

VOLANO UP (6 CONNECTIONS)

Model	Volume	Weight	De	H	H1	H2	H3	H4	IF	I	DS	B-O	A
	[lt]	[Kg]					[mm]					Connections F	
25	25	14	290	790	170	320	470	620	776	40	166	1"	1"1/4
50	51	19	343	1000	200	400	600	800	996	40	192	1"	1"1/4
80	80	22	450	745	175	310	440	570	695	70	252	1"1/4	1"1/4
100	95	26	450	875	175	350	525	700	825	70	252	1"1/4	1"1/4

NEW **FLOOR STANDING SUPPORT FOR VOLANO UP RANGE**

Steel floor standing support + fixing screws

Art. Nr.	Suitable for model
5207321100001	25
5207321100002	50
Compatible with any type of external cladding and internal finish.	

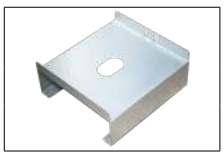

Detail of the fastening

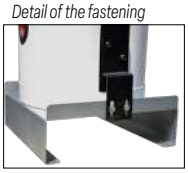



Products designed and manufactured for using within temperature and pressure limits in accordance to Art. 4.3 Directive 2014/68/EU (P.E.D.)

VOLANO **30 TOP** - MILD STEEL / STAINLESS STEEL

HANGING SEPARATOR/BUFFER TANK FOR HEAT PUMP IN STAINLESS STEEL OR MILD STEEL



TECHNICAL DESCRIPTION

Buffers either for hot or cold water have two main functions: they work both as hydraulic separator and buffer tank.
The hydraulic separator makes the heat pump flow rates and terminals flow rates unconnected. The buffer function reduces the heat pump on/off switchings.
Hanging energy buffer tanks 30 TOP are designed for ceiling or wall installation.

MATERIAL

- Mild steel.
- Stainless steel.

EXTERNAL LINING

- *VOLANO 30 TOP WBF* : Grey PVC (for indoor installation).
- *VOLANO 30 TOP WBP*: Technopolymer coating suitable for outdoor installations.

INSULATION

High thermal insulation with ecological polyurethane hard foam.

WARRANTY

5 years - See general sales conditions and warranty.

NEW

PROMPT AVAILABILITY

STAINLESS STEEL

MILD STEEL

MILD STEEL

4 CONNECTIONS

	Installation type	Model	Art. Nr.	Energy efficiency class
 **VOLANO 30 TOP GBF** GREY PVC EXTERNAL LINING	INDOOR	30	3070160920045	A
 **VOLANO 30 TOP GBP** TECHNOPOLYMER EXTERNAL LINING	OUTDOOR	30	3070160920046	A

STAINLESS STEEL

4 CONNECTIONS

	Installation type	Model	Art. Nr.	Energy efficiency class
 **VOLANO 30 TOP XBF** GREY PVC EXTERNAL LINING	INDOOR	30	3001012310039	A
 **VOLANO 30 TOP XBP** TECHNOPOLYMER EXTERNAL LINING	OUTDOOR	30	3001012310040	A

Products designed and manufactured for using within temperature and pressure limits in accordance to Art. 4.3 Directive 2014/68/EU (P.E.D.)

VOLANO **30 TOP** - MILD STEEL / STAINLESS STEEL

HANGING SEPARATOR/BUFFER TANK FOR HEAT PUMP IN STAINLESS STEEL OR MILD STEEL

	PRESSURE	TEMPERATURE
	Pmax	Tmin/Tmax
Mild steel	6 bar	-10 / +99 °C
Stainless steel	6 bar	-10 / +95 °C

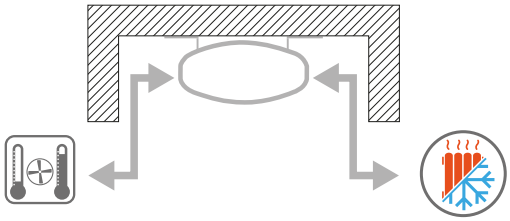

VT VERSION - WALL MOUNTING

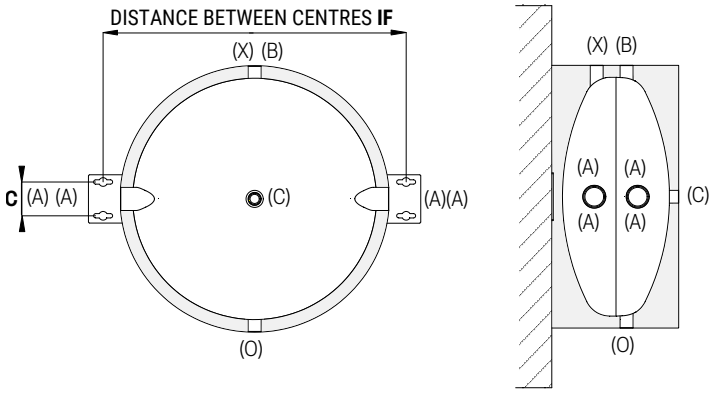

A	To the System
B	Safety Valve
C	Connection for instrumentation 1/2"
O	Drain (for WALL MOUNTING version)
X	Drain 3/8" (for CEILING MOUNTING version)

OR VERSION - CEILING MOUNTING

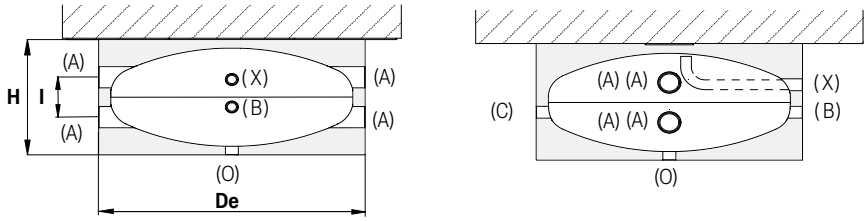

VOLANO 30 TOP

Model	Volume	Weight	De	H	I	IF	C	B-O	A
	[lt]	[Kg]			[mm]			Connections F	
30	30	17,5	550	265	96	620	70	1/2"	1"1/4



Products designed and manufactured for using within temperature and pressure limits in accordance to Art. 4.3 Directive 2014/68/EU (P.E.D.)

VOLANO **CUBE**

HANGING SEPARATOR/BUFFER SPACE SAVING TANK FOR HEAT PUMP IN STAINLESS STEEL OR MILD STEEL



NEW

PROMPT AVAILABILITY

STAINLESS STEEL

MILD STEEL

TECHNICAL DESCRIPTION
Buffers either for hot or cold water have two main functions: they work both as hydraulic separator and buffer tank.
The hydraulic separator makes the heat pump flow rates and terminals flow rates unconnected. The buffer function reduces the heat pump on/off switchings.
VOLANO CUBE hanging energy buffer tanks are designed for wall installation.

MATERIAL
- Mild steel.
- Stainless steel.

EXTERNAL LINING
External coating in metal sheet protected by a particular anticorrosive treatment. Suitable for outdoor installation.

INSULATION
High thermal insulation with ecological polyurethane hard foam.

WARRANTY
5 years - See general sales conditions and warranty.

MILD STEEL		Installation type	Model	Art. Nr.	Energy efficiency class
	**VOLANO CUBE GBL** METAL SHEET EXTERNAL LINING	OUTDOOR	50	3070160920025	B
			80	3070160920026	C
		Quantities (4pcs)	50	3070160920027	B
		Quantities (4pcs)	80	3070160920028	C

STAINLESS STEEL		Installation type	Model	Art. Nr.	Energy efficiency class
	**VOLANO CUBE XBL** METAL SHEET EXTERNAL LINING NEW	OUTDOOR	50	3070012310001	B
			80	3070012310002	C

EXAMPLE OF INSTALLATION WITH **VOLANO CUBE**

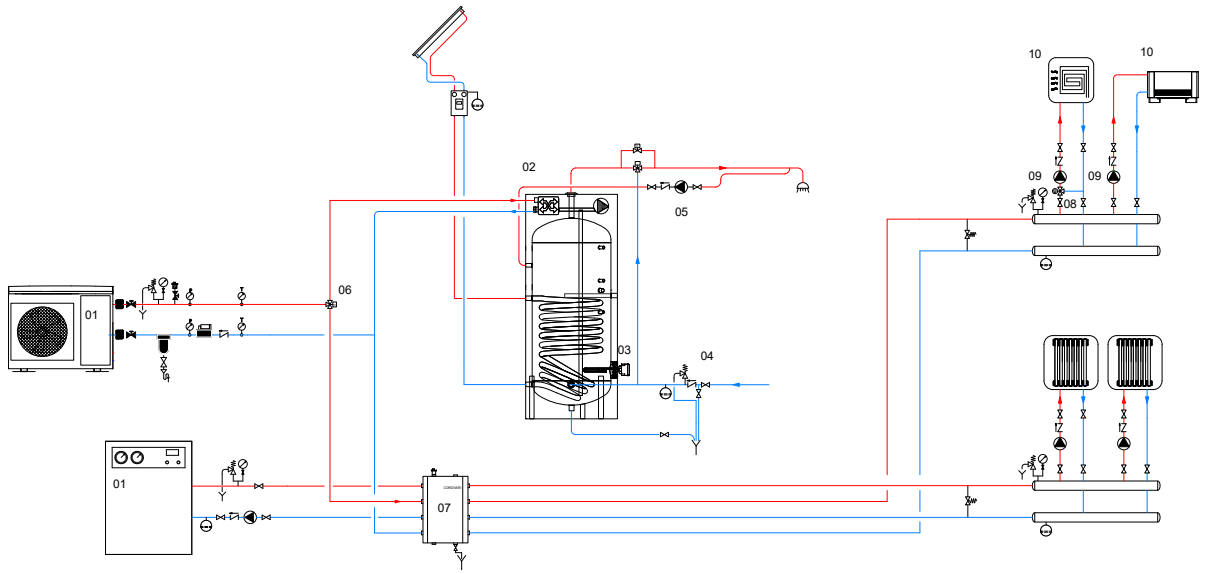

01	Generator / Heat pump	04	Hydraulic safety group	07	Volano CUBE	10	Heating/cooling units
02	Calorifier tank Bolly® 2 PDC	05	D.H.W. circulation group	08	Thermostatic mixing valve		
03	Electric immersion heater	06	Motorized 3-way valve	09	Circulation group for heating/cooling system		

The following schemes are purely illustrative. To realize the installation, always refer to a qualified technician.

Products designed and manufactured for using within temperature and pressure limits in accordance to Art. 4.3 Directive 2014/68/EU (P.E.D.)

VOLANO **CUBE**

HANGING SEPARATOR/BUFFER SPACE SAVING TANK FOR HEAT PUMP IN STAINLESS STEEL OR MILD STEEL

	PRESSURE	TEMPERATURE
	Pmax	Tmin/Tmax
Mild steel	6 bar	-10 / +99 °C
Stainless steel	6 bar	-10 / +95 °C

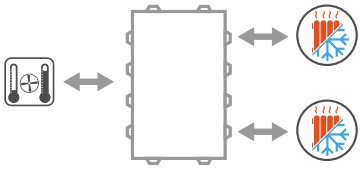

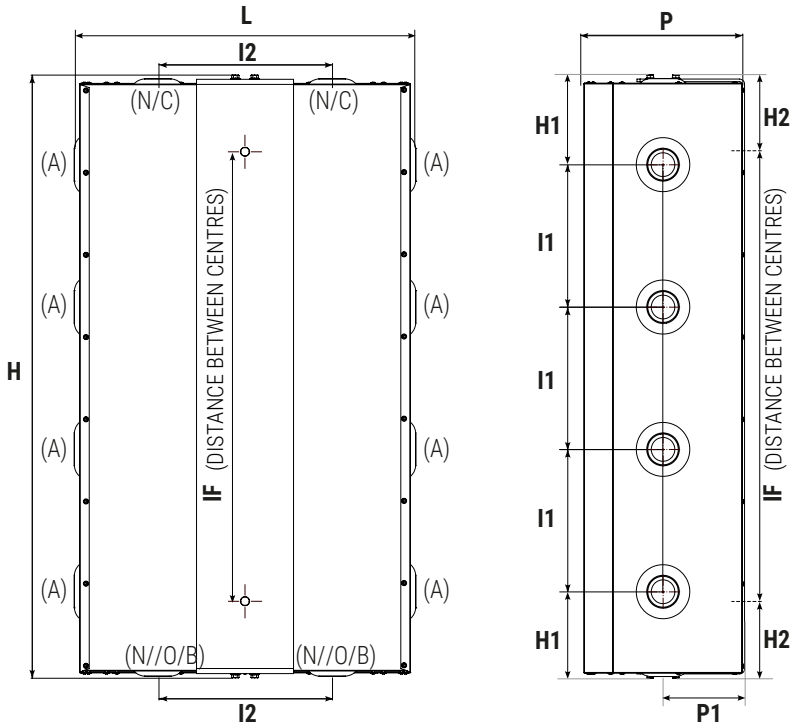

A	To the System
N	Connection for instrumentation
O	Drain
B	Safety Valve
C	Air purge

Model	Volume	Weight	H	L	P	H1	H2	I1	I2	P1	IF	A	N/O/B/C
	[lt]	[Kg]	[mm]									Connections F	
50	52	39	940	528	252	140	120	222	270	128	700	1"1/4	1"
80	80	50	1070	593	278	154	185	253	270	141	700	1"1/4	1"1/4

PERFECT THERMAL STRATIFICATION

The patented design of the Volano Cube ensures perfect thermal stratification of the internal fluid, with great advantages in terms of system efficiency and versatility of configuration and use. The 8 side hydraulic connections allow the simultaneous use of two generators (e.g., heat pump and boiler) and two types of terminals (high and low temperature). The 4 service connections provide maximum flexibility for installing the necessary safety and control instrumentation.

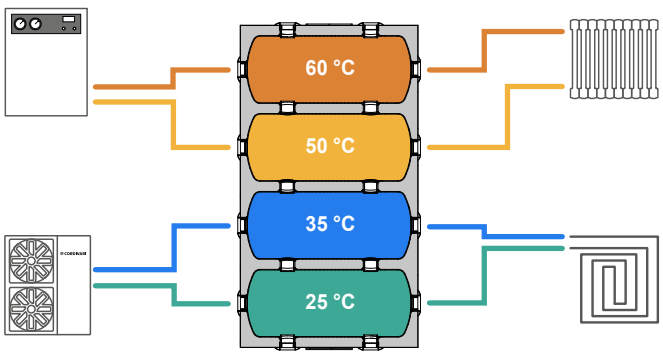

INTEGRATION WITH BOOST HEATER

Thanks to the patented design of the Volano Cube, it is possible to efficiently use an electric Boost heater that, if necessary, under particular operating conditions, facilitates the commissioning or reset of the primary circuit of the system.

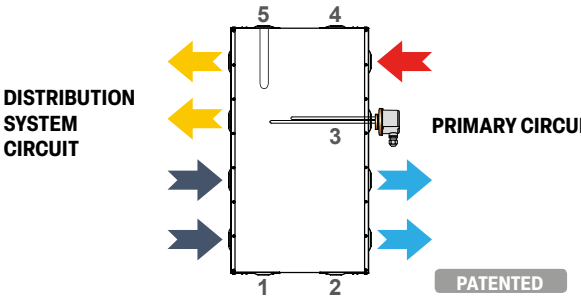

1	Drain
2	Dirt Separator/Safety valve
3	Optional electric heater
4	Vent
5	Socket electric resistance control probe

Products designed and manufactured for using within temperature and pressure limits in accordance to Art. 4.3 Directive 2014/68/EU (P.E.D.)

VOLANO **BS** - MILD STEEL

FLOOR STANDING BUFFER TANK FOR HEAT PUMP IN MILD STEEL



TECHNICAL DESCRIPTION
Buffer either for hot or cold water provided by heat pump, in order to limit the generator on/off switchings.
MATERIAL
Mild steel.

EXTERNAL LINING
Grey PVC.
INSULATION
High thermal insulation with ecological polyurethane hard foam.
WARRANTY
5 years - See general sales conditions and warranty.

PROMPT AVAILABILITY

MILD STEEL

		Installation type	Model	Art. Nr.	Energy efficiency class
	**VOLANO BS GBF (connections 1")** GREY PVC EXTERNAL LINING	 INDOOR	100	3001162311001	B
			200	3001162311002	C
		Quantities (≥12pcs)	100	3001162311001	B
	**VOLANO BS GBF (connections 1" ¼ - 2")** GREY PVC EXTERNAL LINING	 INDOOR	100	3001162311008	B
			200	3001162311009	C
			300	3001162311003	C
			500	3001162311004	C
			500 (B)	3001162311014	B
			800	3001162311005	C
			1000	3001162311006	C
		Quantities (≥12pcs)	100	3001162311008	B

EXAMPLE OF INSTALLATION WITH **VOLANO BS**

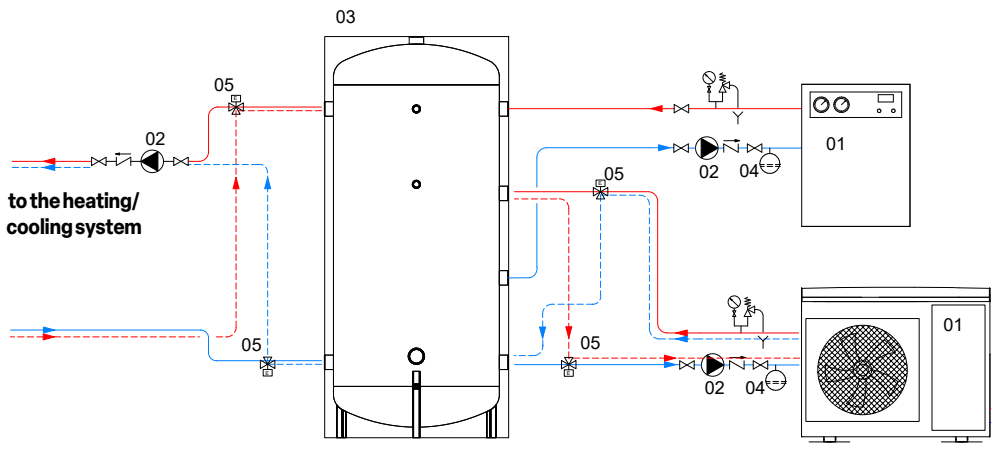

01	Generator / Heat pump	03	VOLANO BS	05	Motorized 3-way valve
02	Circulation group	04	Expansion vessel		

The following schemes are purely illustrative. To realize the installation, always refer to a qualified technician.

Products designed and manufactured for using within temperature and pressure limits in accordance to Art. 4.3 Directive 2014/68/EU (P.E.D.)

VOLANO **BS** - **MILD STEEL**

FLOOR STANDING BUFFER TANK FOR HEAT PUMP IN MILD STEEL

PRESSURE	TEMPERATURE
Pmax	Tmin/Tmax
4 bar	-10 / +99 °C

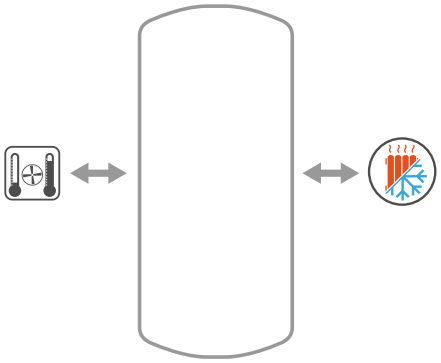

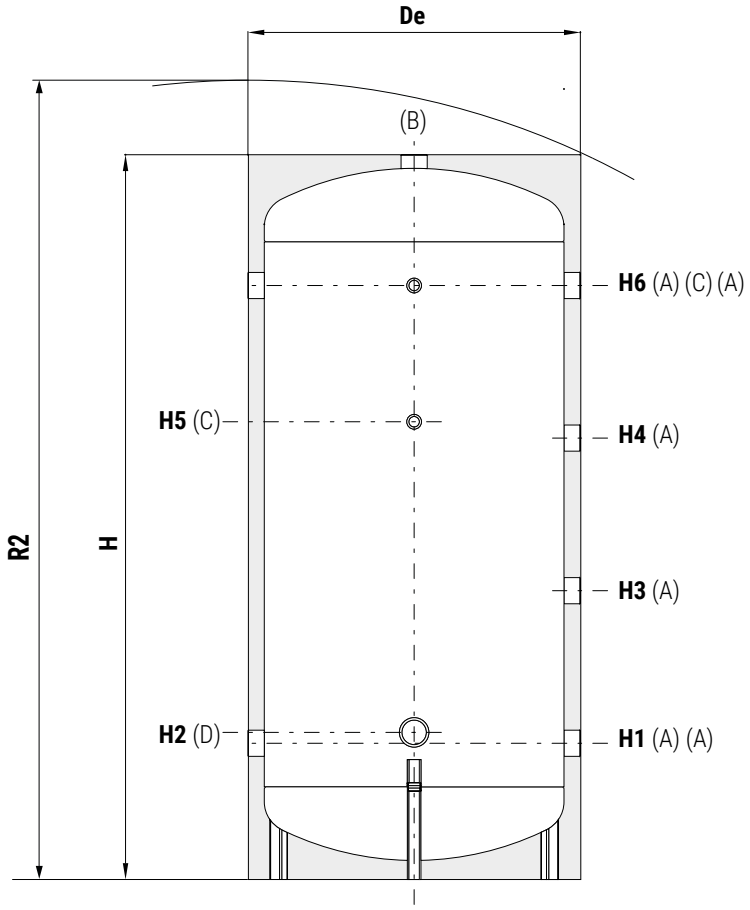

A	To the System
B	To the System/Safety valve
C	Connection for instrumentation G 1/2" F
D	Connection for electric immersion heater G 1" 1/2 F

VOLANO BS GBF - CONN. 1"

Model	Volume	Weight	De	H	R2	H1	H2	H3	H4	H5	H6	B	A
	[lt]	[Kg]					[mm]					Connections F	
100	95	18	450	895	1005	210	250	375	545	515	715	1"1/4	1"
200	181	28	510	1285	1380	210	250	505	795	840	1090	1"1/4	1"

VOLANO BS GBF

Model	Volume	Weight	De	H	R2	H1	H2	H3	H4	H5	H6	B	A
	[lt]	[Kg]					[mm]					Connections F	
100	95	18	450	895	1005	210	250	375	545	515	715	1"1/4	1"1/4
200	181	28	510	1285	1380	210	250	505	795	840	1090	1"1/4	1"1/4
300	280	37	620	1335	1475	255	275	535	815	845	1095	1"1/5	1"1/4
500	480	52	720	1615	1770	270	290	635	1000	1090	1360	1"1/4	1"1/4
800	790	89	900	2040	2230	370	370	805	1235	1370	1670	1"1/4	1"1/2
1000	990	118	1000	1985	2220	345	345	780	1210	1345	1645	1"1/2	2"

VOLANO BS GBF - CLASS B

Model	Volume	Weight	De	H	R2	H1	H2	H3	H4	H5	H6	B	A
	[lt]	[Kg]					[mm]					Connections F	
500 (B)	480	52	750	1615	1785	270	290	635	1000	1090	1360	1"1/4	1"1/4

Products designed and manufactured for using within temperature and pressure limits in accordance to Art. 4.3 Directive 2014/68/EU (P.E.D.)

VOLANO **BS** - **POLYWARM®**

FLOOR STANDING BUFFER TANK FOR HEAT PUMP IN MILD STEEL POLYWARM® COATED



TECHNICAL DESCRIPTION
Buffer either for hot or cold water provided by heat pump, in order to limit the generator on/off switchings.
MATERIAL
Mild steel Polywarm® coated.
EXTERNAL LINING
Grey PVC.

INSULATION
High thermal insulation with ecological polyurethane hard foam.
WARRANTY
5 years - See general sales conditions and warranty.

POLYWARM®
CLEAN SYSTEMS

		Installation type	Model	Art. Nr.	Energy efficiency class
	**VOLANO BS WBF (connections 1")** GREY PVC EXTERNAL LINING	 INDOOR	**100**	3070160310010	**C**
			200	3070160310011	**C**
		Quantities (≥12pcs)	**100**	3070160310010	**C**
	**VOLANO BS WBF (connections 1" ¼ - 2")** GREY PVC EXTERNAL LINING	 INDOOR	**100**	3070160310012	**C**
			200	3070160310013	**C**
			300	3070160310014	**C**
			500	3070160310015	**C**
			500 (B)	3070160310016	**B**
			800	3070160310017	**C**
			1000	3070160310018	**C**
		Quantities (≥12pcs)	**100**	3070160310012	**C**

EXAMPLE OF INSTALLATION WITH **VOLANO BS**

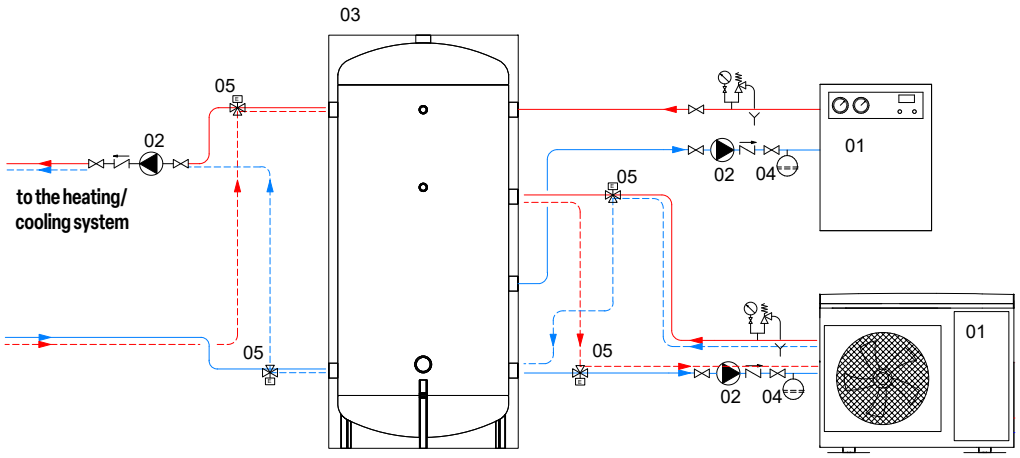

01	Generator / Heat pump	03	VOLANO BS	05	Motorized 3-way valve
02	Circulation group	04	Expansion vessel		

The following schemes are purely illustrative. To realize the installation, always refer to a qualified technician.

Products designed and manufactured for using within temperature and pressure limits in accordance to Art. 4.3 Directive 2014/68/EU (P.E.D.)

VOLANO **BS** - **POLYWARM®**

FLOOR STANDING BUFFER TANK FOR HEAT PUMP IN MILD STEEL POLYWARM® COATED

PRESSURE	TEMPERATURE
Pmax	Tmin/Tmax
4 bar	-10 / +90 °C

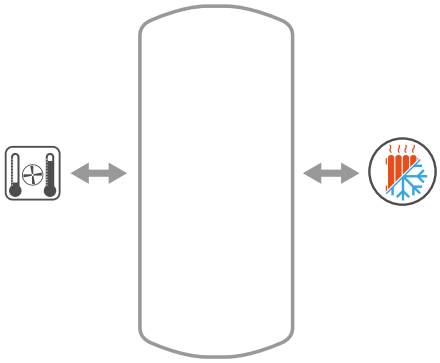

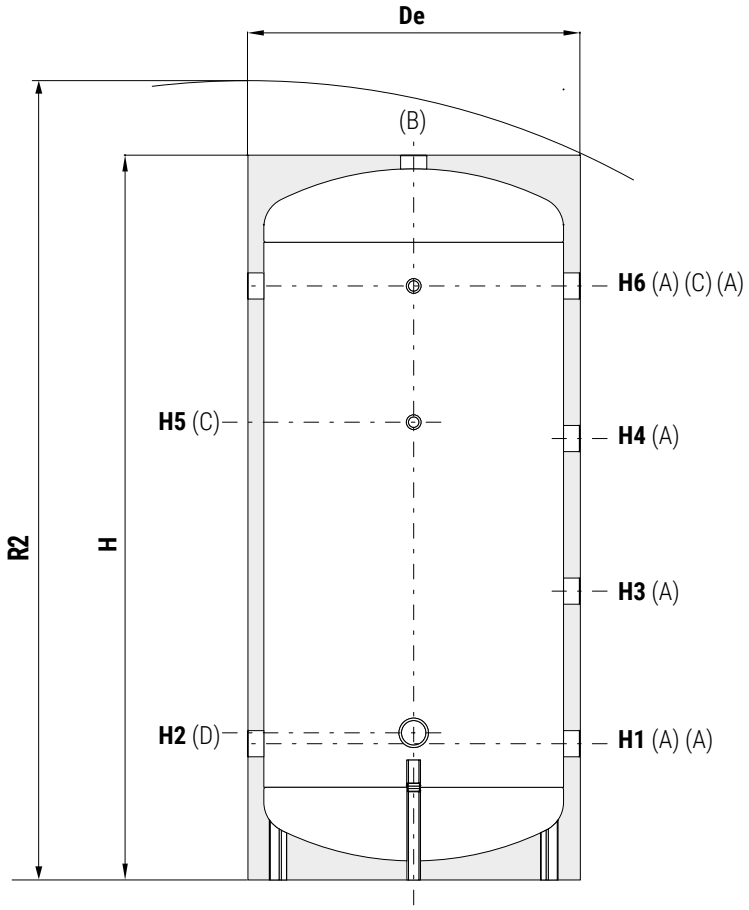

A	To the System
B	To the System/Safety valve
C	Connection for instrumentation G 1/2" F
D	Connection for electric immersion heater G 1" 1/2 F

VOLANO BS WBF - CONN. 1''

Model	Volume	Weight	De	H	R2	H1	H2	H3	H4	H5	H6	B	A
	[lt]	[Kg]					[mm]					Connections F	
100	95	18	450	895	1005	210	250	375	545	515	715	1"1/4	1"
200	181	28	510	1285	1380	210	250	505	795	840	1090	1"1/4	1"

VOLANO BS WBF

Model	Volume	Weight	De	H	R2	H1	H2	H3	H4	H5	H6	B	A
	[lt]	[Kg]					[mm]					Connections F	
100	95	18	450	895	1005	210	250	375	545	515	715	1"1/4	1"1/4
200	181	28	510	1285	1380	210	250	505	795	840	1090	1"1/4	1"1/4
300	280	37	620	1335	1475	255	275	535	815	845	1095	1"1/5	1"1/4
500	480	52	720	1615	1770	270	290	635	1000	1090	1360	1"1/4	1"1/4
800	790	89	900	2040	2230	370	370	805	1235	1370	1670	1"1/4	1"1/2
1000	990	118	1000	1985	2220	345	345	780	1210	1345	1645	1"1/2	2"

VOLANO BS WBF - CLASS B

Model	Volume	Weight	De	H	R2	H1	H2	H3	H4	H5	H6	B	A
	[lt]	[Kg]					[mm]					Connections F	
500 (B)	480	52	750	1615	1785	270	290	635	1000	1090	1360	1"1/4	1"1/4

Products designed and manufactured for using within temperature and pressure limits in accordance to Art. 4.3 Directive 2014/68/EU (P.E.D.)

VOLANO **BS HOT/COLD - MILD STEEL**

FLOOR STANDING BUFFER TANK FOR HEATING AND COOLING SYSTEMS WITH DOUBLE INSULATION FOR HEAT PUMP



APPLICATION AND TECHNICAL DESCRIPTION
The buffer tanks VOLANO BS HOT/COLD with increased insulation for reversible heating/cooling systems are intended for systems that work for the whole year, in which in summer there is the need to accumulate chilled water and in winter hot heating water.
These accumulators improve the efficiency of the system by limiting the number of hourly ignitions of the generator (whether chiller, heat pump or conventional generator) and, increasing the thermal inertia of the circuit, allowing to obtain more stable operating temperatures..

MATERIAL
Mild steel.

EXTERNAL LINING
Grey PVC external lining with plastic black caps for connections.

INSULATION
Increased insulation: Internal insulation layer with closed cell polyethylene of 20 mm not self-extinguishing fixed to the tank body (not removable) coupled with an external layer of insulation of polyester fiber, thickness with high thermal insulation, material with fire resistance class B s2d0 in accordance with EN13501.

WARRANTY
5 years - See general sales conditions and warranty.

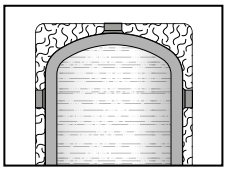

INCREASED INSULATION HOT/COLD



Dismountable soft fleece insulation

MILD STEEL





VOLANO BS GCF
DISMOUNTABLE SOFT FLEECE INSULATION



INDOOR

Model	Art. Nr.	Energy efficiency class
500	3001162150004	C
800	3001162150005	C
1000	3001162150006	C
1500	3001162150007	C
2000	3001162150008	C
2500	3001162150009	
3000	3001162310510	
4000	3001162310511	
5000	3001162310512	

EXAMPLE OF INSTALLATION WITH **VOLANO BS HOT/COLD**

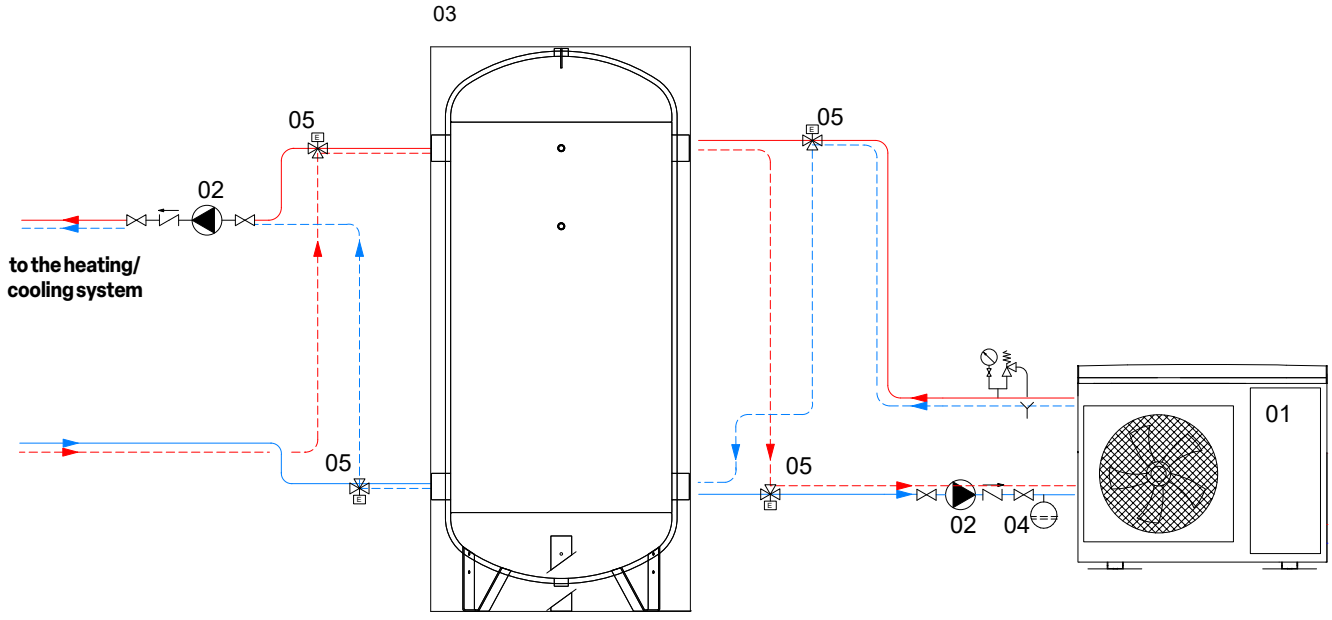

01	Generator	03	VOLANO BS HOT/COLD	05	Motorized 3-way valve
02	Circulation group	04	Expansion vessel		

The following schemes are purely illustrative. To realize the installation, always refer to a qualified technician.

Products designed and manufactured for using within temperature and pressure limits in accordance to Art. 4.3 Directive 2014/68/EU (P.E.D.)

VOLANO **BS HOT/COLD - MILD STEEL**

FLOOR STANDING BUFFER TANK FOR HEATING AND COOLING SYSTEMS WITH DOUBLE INSULATION FOR HEAT PUMP

PRESSURE	TEMPERATURE
Pmax	Tmin/Tmax
7 bar	-10 / +90 °C

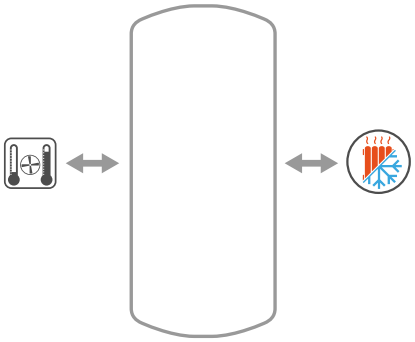

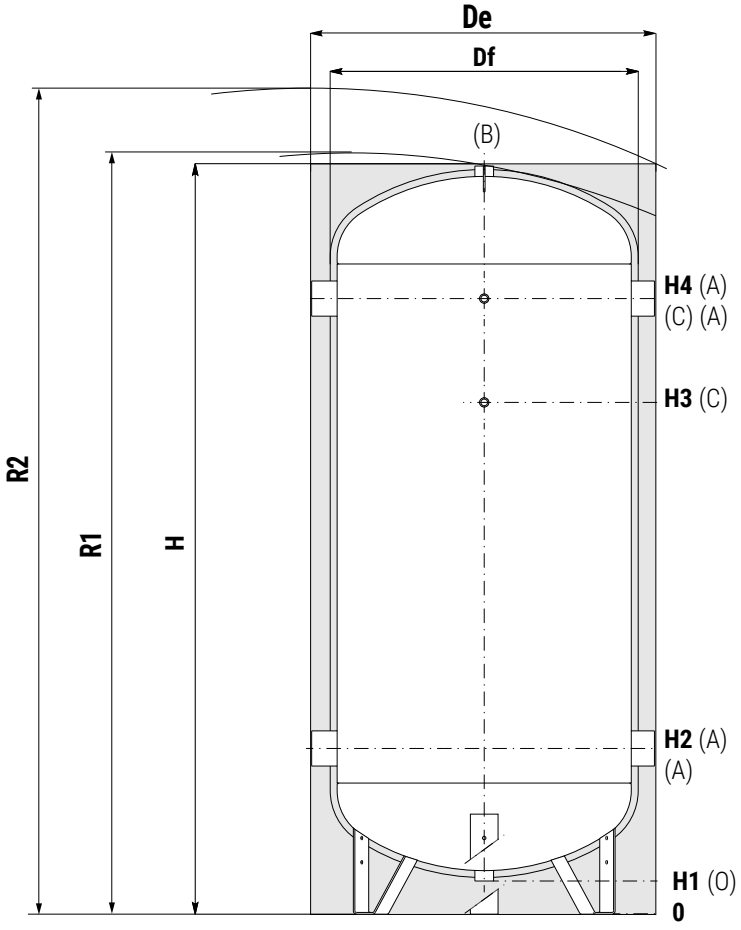

A	System connections
B	To the System/Safety valve
C	Connection for instrumentation G 1/2" F
O	Drain

VOLANO BS HOT/COLD

Model	Weight	Volume	Df	De	H	R1	R2	H1	H2	H3	H4	B-O	A
	[Kg]	[lt]					[mm]					Connections F	
500	101	501	690	910	1900	1970	2110	120	440	1240	1490	1"1/4	3"
800	147	788	790	1010	2200	2280	2430	115	460	1460	1760	1"1/4	3"
1000	170	1034	890	1110	2255	2360	2520	95	480	1480	1780	1"1/2	3"
1500	183	1432	990	1250	2455	2570	2760	120	490	1700	2000	2"	3"
2000	219	1970	1140	1400	2510	2660	2880	105	510	1720	2020	2"	3"
2500	274	2300	1290	1390	2325	2520	2710	150	620	1520	1820	2"	4"
3000	321	2908	1290	1390	2825	2990	3150	150	620	1920	2320	2"	4"
4000	442	3749	1440	1540	2900	3100	3290	135	650	1950	2350	2"	4"
5000	565	4964	1640	1740	2940	3190	3420	110	655	1955	2355	2"	4"

Products designed and manufactured for using within temperature and pressure limits in accordance to Art. 4.3 Directive 2014/68/EU (P.E.D.)

VOLANO **BS REVERSO FLANGED INDOOR**

FLOOR STANDING BUFFER TANK FOR HEATING AND COOLING SYSTEMS WITH DOUBLE INSULATION FOR HEAT PUMP



TECHNICAL DESCRIPTION
The VOLANO BS REVERSO FLANGED INDOOR is used in air conditioning systems for chilled water storage, as well as in heating systems requiring high-flow hot water storage.

MATERIAL
Mild steel.

APPLICATION
Storage of chilled or hot water.

ANTI-CORROSION TREATMENT
No anti-corrosion treatment is required, as it is connected to closed-loop systems.

INSULATION
Increased insulation: Internal insulation layer with closed cell polyethylene of 20 mm not self-extinguishing fixed to the tank body (not removable) coupled with an external layer of insulation of polyester fiber, thickness with high thermal insulation, material with fire resistance class B s2d0 in accordance with EN13501.

CONNECTION FOR ELECTRIC IMMERSION HEATER
1''1/2 connection for electric heater.

WARRANTY
5 years – See general terms and conditions of sale.

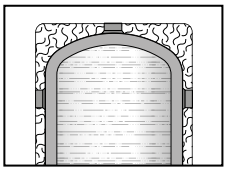

INCREASED INSULATION HOT/COLD



Dismountable soft fleece insulation

MILD STEEL

4 bar



VOLANO BS REVERSO GCF FLANGED INDOOR
DISMOUNTABLE SOFT FLEECE INSULATION



INDOOR

Installation type	Model	Art. Nr.	Energy efficiency class
	500	3001162150010	C
	800	3001162150011	C
	1000	3001162150012	C
	1500	3001162150013	C
	2000	3001162150014	C
	2500	3001162150015	
	3000	3001162150016	
	4000	3001162150017	
	5000	3001162150018	

7 bar



NEW

VOLANO BS REVERSO GCF FLANGED INDOOR
DISMOUNTABLE SOFT FLEECE INSULATION



INDOOR

Installation type	Model	Art. Nr.	Energy efficiency class
	500	3001162150020	C
	800	3001162150021	C
	1000	3001162150022	C
	1500	3001162150023	C
	2000	3001162150024	C
	2500	3001162150025	
	3000	3001162150026	
	4000	3001162150027	
	5000	3001162150028	

EXAMPLE OF INSTALLATION WITH **VOLANO BS REVERSO FLANGED INDOOR**

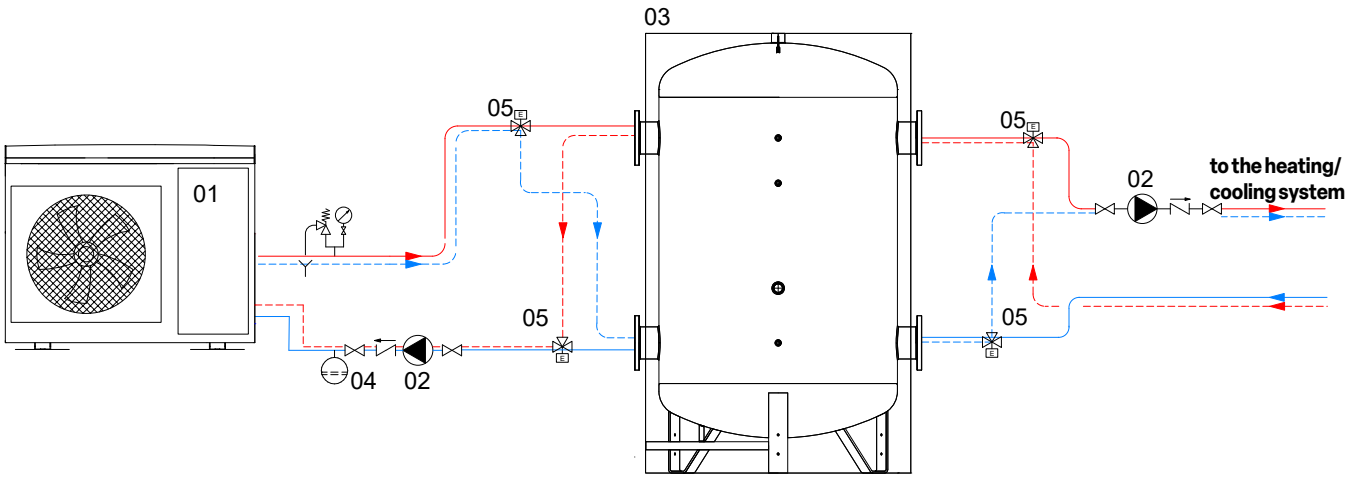

01	Generator	03	VOLANO BS REVERSO FLANGED	05	Motorized 3-way valve
02	Circulation group	04	Expansion vessel		

The following schemes are purely illustrative. To realize the installation, always refer to a qualified technician.

Products designed and manufactured for using within temperature and pressure limits in accordance to Art. 4.3 Directive 2014/68/EU (P.E.D.)

VOLANO **BS REVERSO FLANGED INDOOR**

FLOOR STANDING BUFFER TANK FOR HEATING AND COOLING SYSTEMS WITH DOUBLE INSULATION FOR HEAT PUMP

PRESSURE	TEMPERATURE
Pmax	Tmin/Tmax
4 bar	-10 / +90 °C
7 bar	

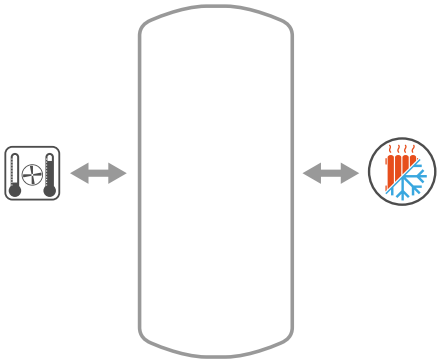

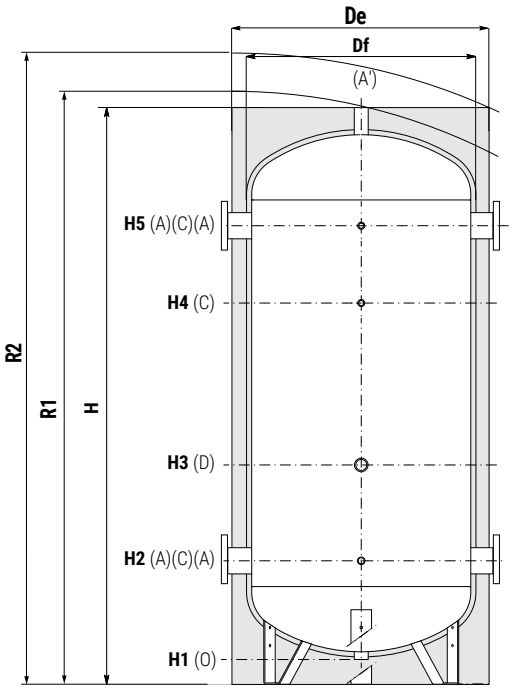

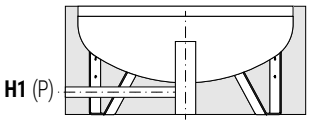

Drain for models from 2500 to 5000

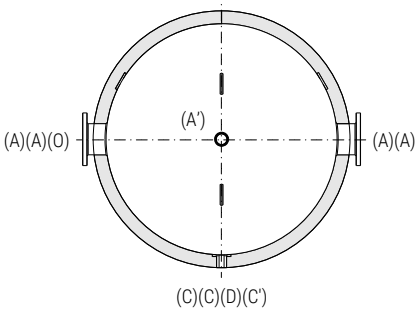

A	System connections
A'	System connections
C	Connection for instrumentation G 1/2" F
D	Connection for electric immersion heater G 1" 1/2 F
O	Drain
P	Drain for models > 2500

VOLANO BS REVERSO FLANGED INDOOR - 4 BAR

Model	Weight	Volume	DF	DE	H	R1	R2	H1	H2	H3	H4	H5	O/P	A'	A
	[Kg]	[lt]	[mm]										Connections F		
500	77	478	690	910	1805	1940	2030	130	505	705	1205	1355	1" 1/4	1" 1/4	DN80 PN16
800	101	790	790	1010	2180	2320	2410	115	560	860	1460	1660	1" 1/4	1" 1/4	DN80 PN16
1000	133	990	890	1110	2115	2300	2400	105	545	825	1425	1605	1" 1/2	1" 1/2	DN100 PN16
1500	194	1438	990	1250	2405	2610	2720	120	590	920	1700	1870	2"	2"	DN150 PN16
2000	225	1977	1140	1400	2460	2720	2840	105	610	940	1720	1890	2"	2"	DN150 PN16
2500	265	2306	1290	1390	2305	2650	2700	145	685	970	1520	1760	1"	2"	DN150 PN16
3000	329	2998	1440	1540	2380	2790	2840	130	715	1000	1450	1785	1"	2"	DN150 PN16
4000	377	3926	1640	1740	2390	2900	2960	105	720	1000	1430	1765	1"	2"	DN150 PN16
5000	442	4984	1640	1740	2950	3380	3430	105	720	1170	1995	2295	1"	2"	DN150 PN16

VOLANO BS REVERSO FLANGED INDOOR - 7 BAR

Model	Weight	Volume	DF	DE	H	R1	R2	H1	H2	H3	H4	H5	O/P	A'	A
	[Kg]	[lt]	[mm]										Connections F		
500	86	496	690	910	1880	2010	2100	125	545	745	1245	1395	1" 1/4	1" 1/4	DN80 PN16
800	121	788	790	1010	2120	2270	2350	115	560	860	1460	1660	1" 1/4	1" 1/4	DN80 PN16
1000	159	1034	890	1110	2235	2410	2500	100	600	880	1480	1660	1" 1/2	1" 1/2	DN100 PN16
1500	223	1435	990	1250	2435	2650	2760	130	590	920	1700	1900	2"	2"	DN150 PN16
2000	304	1968	1140	1400	2490	2750	2870	105	610	940	1720	1920	2"	2"	DN150 PN16
2500	316	2300	1290	1390	2305	2650	2700	145	685	970	1520	1760	1"	2"	DN150 PN16
3000	415	2988	1440	1540	2380	2790	2840	130	715	1000	1450	1785	1"	2"	DN150 PN16
4000	523	3908	1640	1740	2390	2900	2960	105	720	1000	1430	1765	1"	2"	DN150 PN16
5000	608	4963	1640	1740	2950	3380	3430	105	720	1170	1995	2295	1"	2"	DN150 PN16

Products designed and manufactured for using within temperature and pressure limits in accordance to Art. 4.3 Directive 2014/68/EU (P.E.D.)

VOLANO **BS REVERSO FLANGED**

FLOOR STANDING BUFFER TANK FOR HEAT PUMP WITH FLANGED CONNECTIONS FOR LARGE INSTALLATIONS



TECHNICAL DESCRIPTION
VOLANO BS REVERSO FLANGED is used in cooling systems to store cold water and also in heating systems to store hot water at high flow rate.
MATERIAL
Mild steel.
APPLICATION
Storage of chilled or hot water.
ANTI-CORROSION TREATMENT
No anti-corrosion treatment is required, as it is connected to closed-loop systems.

INSULATION
One layer of anti-condensation insulation plus a second layer of polyester fiber, all covered by an aluminium external cover (which can be dissembled to facilitate passage)
EXTERNAL LINING
Aluminium external cover.
CONNECTION FOR ELECTRIC IMMERSION HEATER
1''1/2 connection for electric heater.
WARRANTY
5 years – See general terms and conditions of sale.

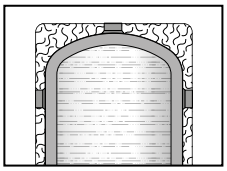

INCREASED INSULATION HOT/COLD



Dismountable soft fleece insulation

MILD STEEL

4 bar



VOLANO BS REVERSO FLANGED GCA
ALUMINIUM EXTERNAL COVER

Installation type	Model	Art. Nr.
OUTDOOR	2500	3001162310559
	3000	3001162310560
	4000	3001162310561
	5000	3001162310562

7 bar



NEW

VOLANO BS REVERSO FLANGED GCA
ALUMINIUM EXTERNAL COVER

Installation type	Model	Art. Nr.
OUTDOOR	2500	3001162310020
	3000	3001162310021
	4000	3001162310022
	5000	3001162310023

EXAMPLE OF INSTALLATION WITH **VOLANO BS REVERSO FLANGED**

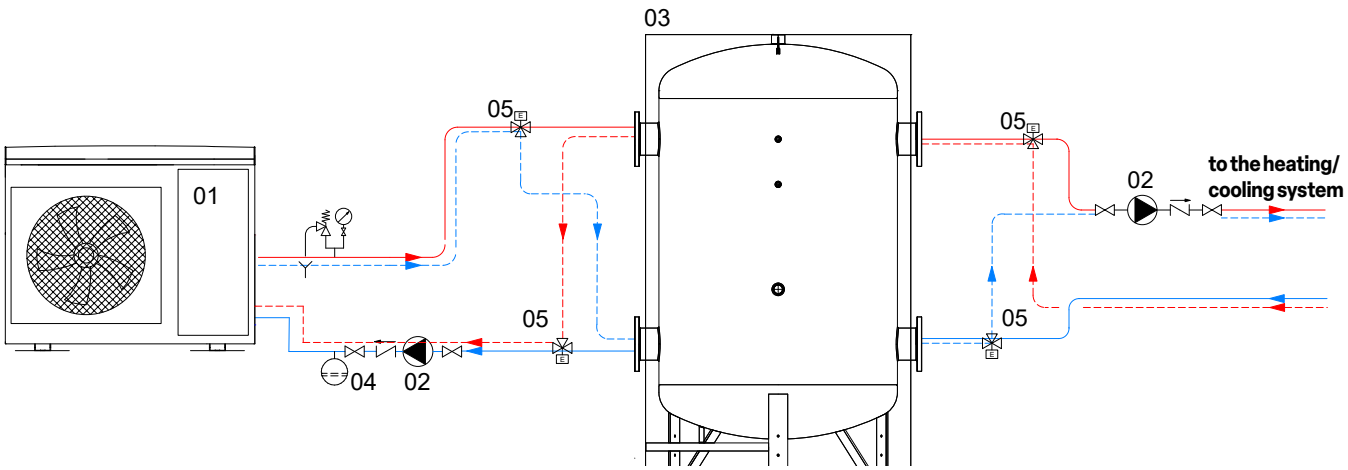

01	Generator	03	VOLANO BS REVERSO FLANGED	05	Motorized 3-way valve
02	Circulation group	04	Expansion vessel		

The following schemes are purely illustrative. To realize the installation, always refer to a qualified technician.

Products designed and manufactured for using within temperature and pressure limits in accordance to Art. 4.3 Directive 2014/68/EU (P.E.D.)

VOLANO **BS REVERSO FLANGED**

FLOOR STANDING BUFFER TANK FOR HEAT PUMP WITH FLANGED CONNECTIONS FOR LARGE INSTALLATIONS

PRESSURE	TEMPERATURE
Pmax	Tmin/Tmax
4 bar	-10 / +99 °C
7 bar	

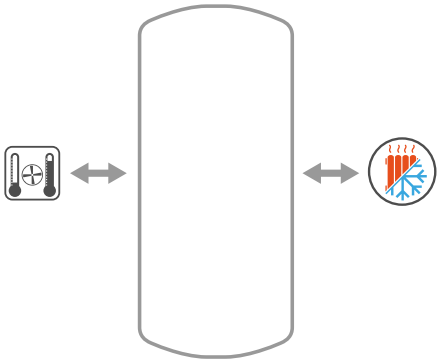

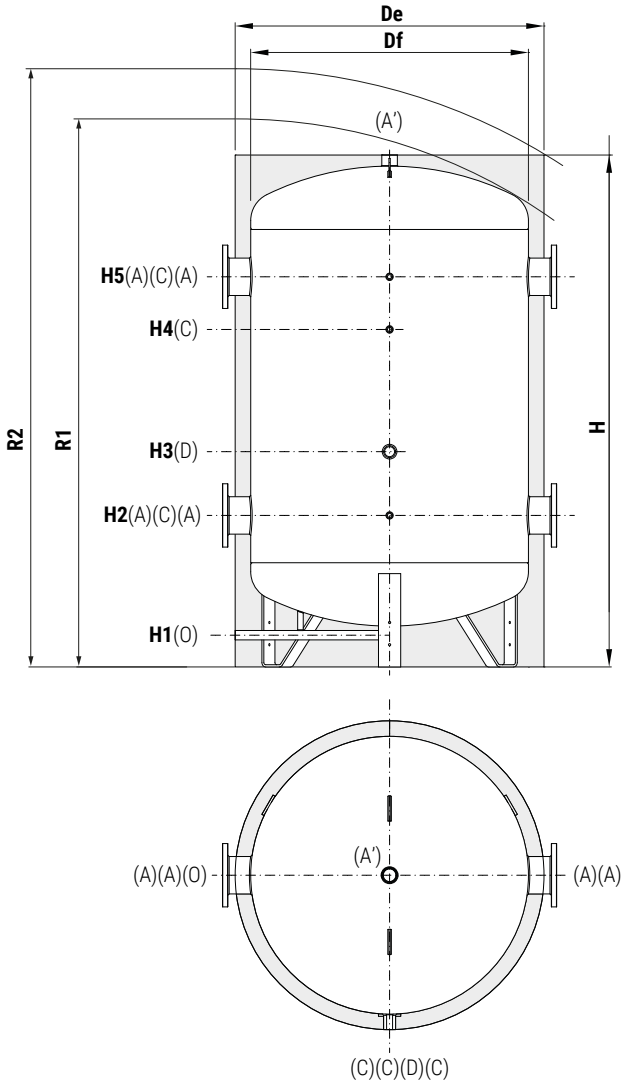

A	System connections
A'	System connections
C	Connection for instrumentation G 1/2" F
D	Connection for electric immersion heater G 1" 1/2 F
O	Drain

VOLANO BS REVERSO FLANGED 4 BAR

Model	Weight	Volume	Df	De	H	R1	R2	H1	H2	H3	H4	H5	O/P	A'	A
	[Kg]	[lt]	[mm]										Connections F		
2500	292	2306	1290	1390	2305	2650	2700	145	685	970	1520	1760	1"	2"	DN150 PN16
3000	359	2998	1440	1540	2380	2790	2840	130	715	1000	1450	1785	1"	2"	DN150 PN16
4000	412	3926	1640	1740	2390	2900	2960	105	720	1000	1430	1765	1"	2"	DN150 PN16
5000	484	4984	1640	1740	2920	3350	3400	105	720	1170	1995	2295	1"	2"	DN150 PN16

VOLANO BS REVERSO FLANGED 7 BAR

Model	Weight	Volume	Df	De	H	R1	R2	H1	H2	H3	H4	H5	O/P	A'	A
	[Kg]	[lt]	[mm]										Connections F		
2500	343	2300	1290	1390	2305	2650	2700	145	685	970	1520	1760	1"	2"	DN150 PN16
3000	445	2988	1440	1540	2380	2790	2840	130	715	1000	1450	1785	1"	2"	DN150 PN16
4000	558	3908	1640	1740	2390	2900	2960	105	720	1000	1430	1765	1"	2"	DN150 PN16
5000	650	4963	1640	1740	2920	3360	3410	105	720	1170	1995	2295	1"	2"	DN150 PN16

Products designed and manufactured for using within temperature and pressure limits in accordance to Art. 4.3 Directive 2014/68/EU (P.E.D.)

VOLANO **BS REVERSO**

FLOOR STANDING BUFFER TANK FOR HEAT PUMP AND OUTDOOR INSTALLATION



TECHNICAL DESCRIPTION
The BS REVERSO thermal buffer tank is used in air conditioning systems for chilled water storage, as well as in heating systems requiring high-flow hot water storage.
MATERIAL
Mild steel.
APPLICATION
Storage of chilled or hot water.
ANTI-CORROSION TREATMENT
No anti-corrosion treatment is required, as it is connected to closed-loop systems.

INSULATION
Polyurethane hard foam with high thermal insulation performance.
EXTERNAL LINING
Pre-painted galvanized metal sheet, grey color.
CONNECTION FOR ELECTRIC IMMERSION HEATER
1''1/2 connection for electric heater.
WARRANTY
5 years – See general terms and conditions of sale.

PROMPT AVAILABILITY

MILD STEEL

4 bar	Installation type	Model	Art. Nr.	Energy efficiency class
 **VOLANO BS REVERSO GBL** PRE-PAINTED GALVANIZED METAL SHEET	OUTDOOR	100	3001162310551	C
		200	3001162310552	C
		300	3001162310553	C
		500	3001162310564	C
		800	3001162310565	C
		1000	3001162310566	C
		1500	3001162310567	C
		2000	3001162310568	C

7 bar	Installation type	Model	Art. Nr.	Energy efficiency class
 **VOLANO BS REVERSO GBL** PRE-PAINTED GALVANIZED METAL SHEET	OUTDOOR	100	3001162310010	C
		200	3001162310011	C
		300	3001162310012	C
		500	3001162310013	C
		800	3001162310014	C
		1000	3001162310015	C
		1500	3001162310016	C
		2000	3001162310019	C

EXAMPLE OF INSTALLATION WITH **VOLANO BS REVERSO**

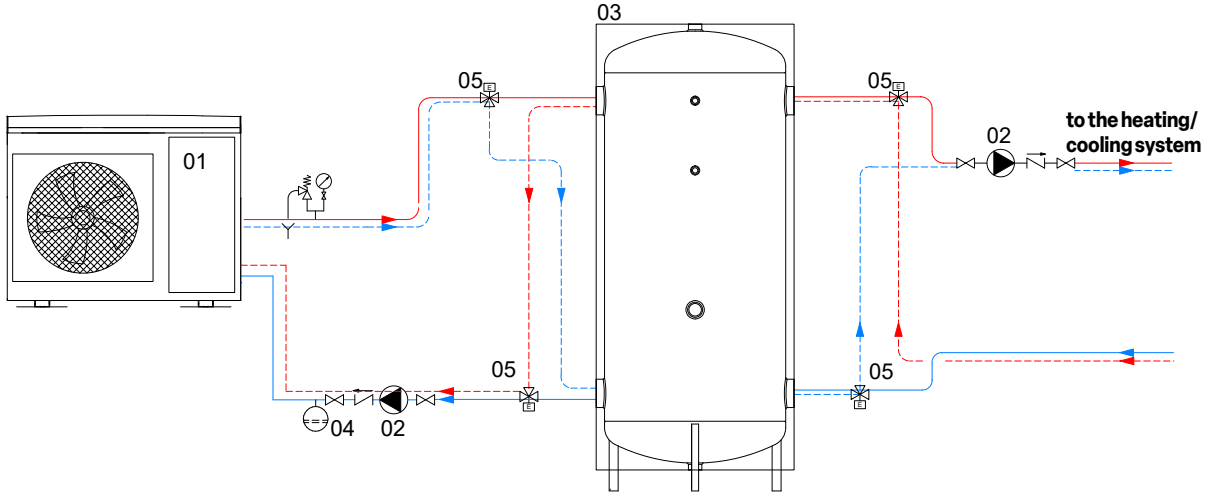

01	Generator	03	VOLANO BS REVERSO	05	Motorized 3-way valve
02	Circulation group	04	Expansion vessel		

The following schemes are purely illustrative. To realize the installation, always refer to a qualified technician.

Products designed and manufactured for using within temperature and pressure limits in accordance to Art. 4.3 Directive 2014/68/EU (P.E.D.)

VOLANO **BS REVERSO**

FLOOR STANDING BUFFER TANK FOR HEAT PUMP AND OUTDOOR INSTALLATION

PRESSURE	TEMPERATURE
Pmax	Tmin/Tmax
4 bar	-10 / +99 °C
7 bar	

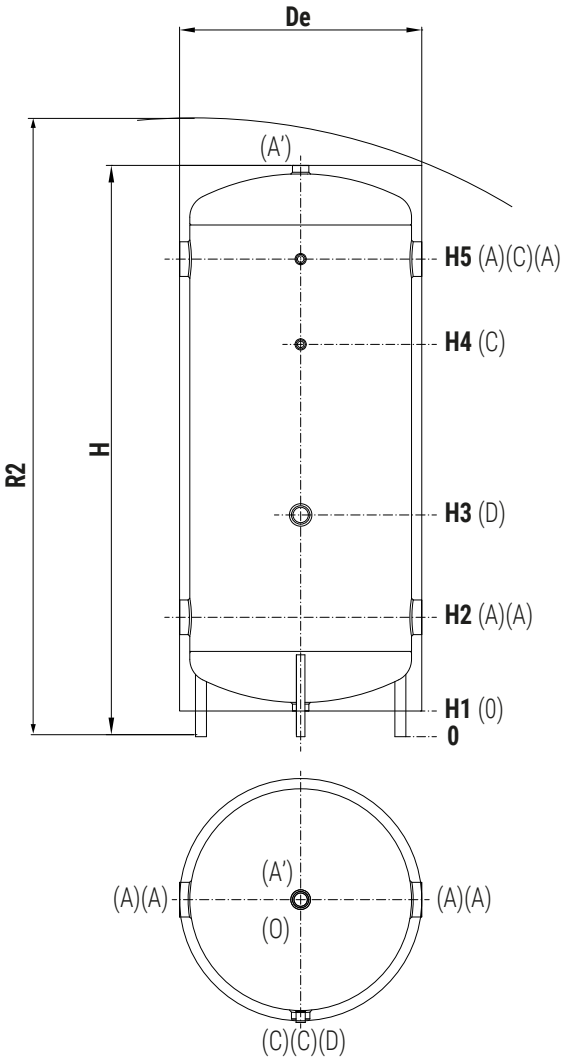

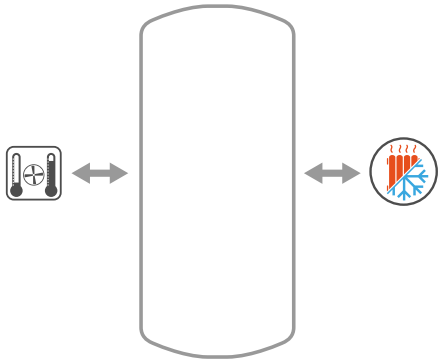

A	System connections
A'	System connections/Safety valve
C	Connection for instrumentation G 1/2" F
D	Connection for electric immersion heater G 1" 1/2 F
O	Drain

VOLANO BS REVERSO - 4 BAR

Model	Volume	De	H	R2	H1	H2	H3	H4	H5	A'	A
	[lt]				[mm]					Connections F	
100	95	450	948	1050	73	258	398	563	763	1"1/4	1"1/2
200	180	510	1336	1435	71	263	503	893	1143	1"1/4	1"1/2
300	279	620	1395	1530	75	315	535	905	1155	1"1/4	2"
500	478	750	1700	1860	75	350	650	1150	1400	1"1/4	3"
800	790	900	2095	2285	80	425	825	1425	1725	1"1/4	3"
1000	990	1000	2035	2270	75	395	795	1395	1695	1"1/2	3"
1500	1417	1100	2336	2585	102	471	901	1681	1951	2"	3"
2000	1975	1300	2436	2765	102	506	936	1716	2016	2"	3"

VOLANO BS REVERSO - 7 BAR

Model	Volume	De	H	R2	H1	H2	H3	H4	H5	A'	A
	[lt]				[mm]					Connections F	
100	99	450	1005	1100	75	290	430	595	795	1"1/4	1"1/2
200	187	510	1405	1495	75	305	545	935	1185	1"1/4	1"1/2
300	288	620	1460	1590	75	350	570	940	1190	1"1/4	2"
500	496	750	1780	1935	75	395	695	1195	1445	1"1/4	3"
800	788	900	2090	2275	80	425	825	1425	1725	1"1/4	3"
1000	1033	1000	2155	2380	75	460	860	1460	1760	1"1/2	3"
1500	1434	1100	2370	2610	105	475	905	1685	1985	2"	3"
2000	1967	1300	2440	2765	105	510	940	1720	2020	2"	3"

Products designed and manufactured for using within temperature and pressure limits in accordance to Art. 4.3 Directive 2014/68/EU (P.E.D.)

VOLANO **BS COOLING-HEATING**

HARD-FOAM INSULATED BUFFER TANK IN MILD STEEL FOR COOLING-HEATING SYSTEMS



APPLICATION AND TECHNICAL DESCRIPTION
Storage of chilled or hot water for inverter installations.
These buffers have an high thermal insulation and external lining with galvanized and painted metallic cover. The anti-corrosion treatment is not necessary being installed in closed systems. They are suitable for installations that works with cold water during summer and hot water during winter.
They also allow to limit the number of on/off switch of the generator (either heat pump, chilled system or standard generator) increasing the thermic inertia of the system and to have more stable temperatures.

MATERIAL
Mild steel.
EXTERNAL LINING
Pre-painted galvanized metal sheet, grey color.
INSULATION
Polyurethane hard foam with high thermal insulation performance.
WARRANTY
5 years – See general terms and conditions of sale.

PROMPT AVAILABILITY

MILD STEEL

		Installation type	Model	Art. Nr.	Energy efficiency class
	**VOLANO BS COOLING-HEATING GBL** PRE-PAINTED GALVANIZED METAL SHEET	OUTDOOR	100	3001162310501	C
			200	3001162310502	C
			300	3001162310503	C
			500	3001162310524	C
			800	3001162310529	C
			1000	3001162310530	C
			1500	3001162310527	C
			2000	3001162310528	C
	**VOLANO BS COOLING-HEATING GBL (class B)** PRE-PAINTED GALVANIZED METAL SHEET	OUTDOOR	800	3001162310525	B
			1000	3001162310526	B

EXAMPLE OF INSTALLATION WITH **VOLANO BS COOLING-HEATING**

01	Generator
02	Circulation group
03	VOLANO BS COOLING-HEATING
04	Expansion vessel
05	Motorized 3-way valve

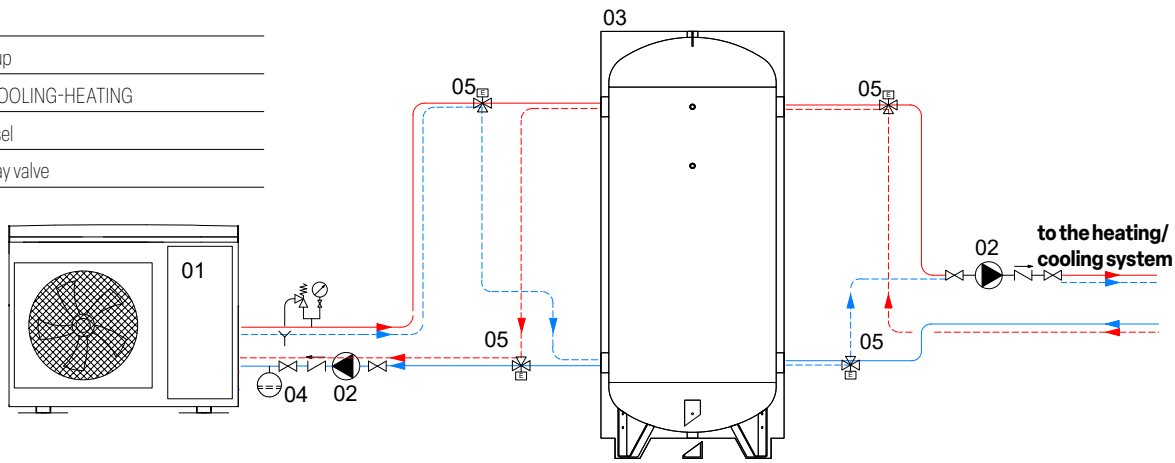

The following schemes are purely illustrative. To realize the installation, always refer to a qualified technician.

Products designed and manufactured for using within temperature and pressure limits in accordance to Art. 4.3 Directive 2014/68/EU (P.E.D.)

VOLANO **BS COOLING-HEATING**

HARD-FOAM INSULATED BUFFER TANK IN MILD STEEL FOR COOLING-HEATING SYSTEMS

PRESSURE	TEMPERATURE
Pmax	Tmin/Tmax
7 bar	-10 / +99 °C

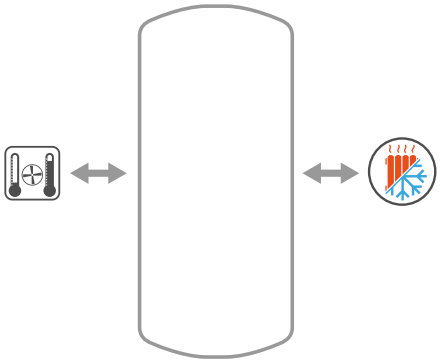

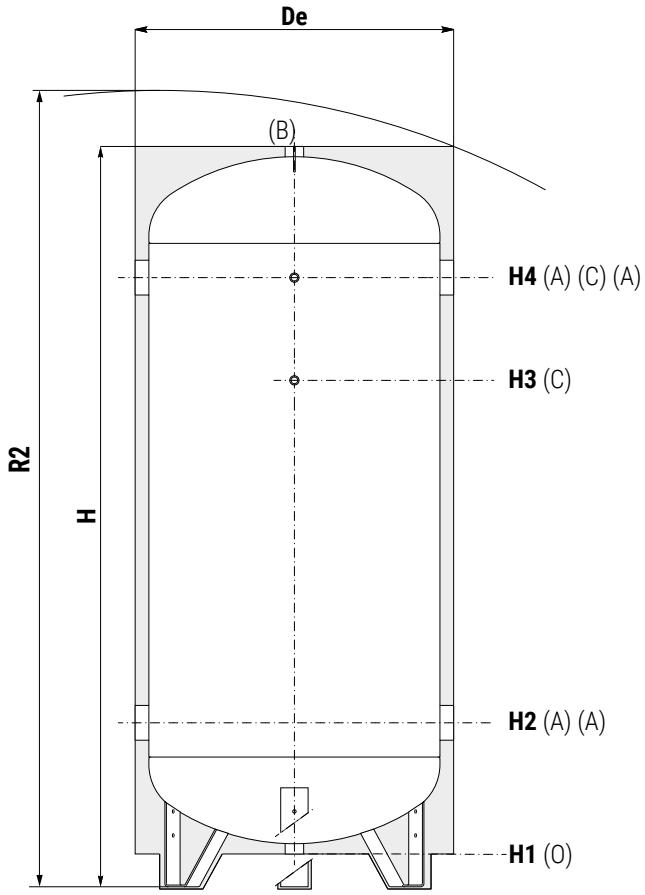

A	System connections
B	Safety valve
C	Connection for instrumentation G 1/2" F
O	Drain

VOLANO BS COOLING-HEATING GBL

Model	Weight	Volume	De	H	R2	H1	H2	H3	H4	B-O	A	C
	[Kg]	[lt]				[mm]				Connections F		
100	32	101	450	1006	1115	73	287	592	792	1"1/4	1"1/2	1/2"
200	53	190	510	1407	1505	68	297	927	1177	1"1/4	1"1/2	1/2"
300	67	292	620	1518	1640	129	404	994	1244	1"1/4	2"	1/2"
500	101	501	750	1790	1945	80	400	1200	1450	1"1/4	3"	1/2"
800	147	788	850	2100	2270	80	430	1437	1730	1"1/4	3"	1/2"
1000	170	1034	950	2166	2370	80	463	1463	1763	1"1/2	3"	1/2"
1500	183	1432	1100	2366	2615	100	471	1681	1981	2"	3"	1/2"
2000	219	1970	1300	2436	2770	100	506	1716	2016	2"	3"	1/2"
800 (B)	147	788	900	2100	2290	80	430	1437	1730	1"1/4	3"	1/2"
1000 (B)	170	1034	1000	2166	2390	80	463	1463	1763	1"1/2	3"	1/2"

Products designed and manufactured for using within temperature and pressure limits in accordance to Art. 4.3 Directive 2014/68/EU (P.E.D.)

VOLANO **BS COOLING-HEATING** -POLYWARM®

HARD-FOAM INSULATED BUFFER TANK WITH INTERNAL POLYWARM® COATING FOR COOLING-HEATING SYSTEMS



APPLICATION AND TECHNICAL DESCRIPTION
Storage of chilled or hot water for inverter installations.
These buffers have an high thermal insulation and external lining with galvanized and painted metallic cover.
They are suited for installations that works with cold water during summer and hot water during winter.
They also allow to limit the number of switch on/off of the generator (either heat pump, chilled system or standard generator) increasing the thermic inertia of the system and to have more stable temperatures.

MATERIAL
Mild steel Polywarm® coated.
EXTERNAL LINING
Pre-painted galvanized metal sheet, grey color.
INSULATION
Polyurethane hard foam with high thermal insulation performance.
WARRANTY
5 years – See general terms and conditions of sale.

POLYWARM®
CLEAN SYSTEMS

		Installation type	Model	Art. Nr.	Energy efficiency class
	**VOLANO BS COOLING-HEATING WBL** PRE-PAINTED GALVANIZED METAL SHEET	OUTDOOR	**100**	3001162330001	**C**
			200	3001162330002	**C**
			300	3001162330003	**C**
			500	3001162330004	**C**
			800	3001162330005	**C**
			1000	3001162330006	**C**

EXAMPLE OF INSTALLATION WITH **VOLANO BS COOLING-HEATING**

01	Generator
02	Circulation group
03	VOLANO BS COOLING-HEATING
04	Expansion vessel
05	Motorized 3-way valve

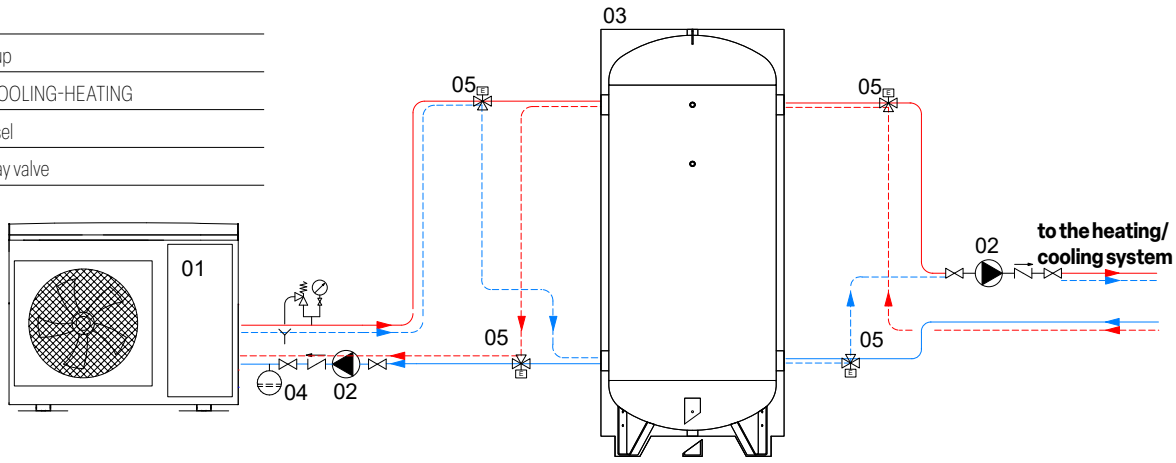

The following schemes are purely illustrative. To realize the installation, always refer to a qualified technician.

Products designed and manufactured for using within temperature and pressure limits in accordance to Art. 4.3 Directive 2014/68/EU (P.E.D.)

VOLANO **BS COOLING-HEATING** - POLYWARM®

HARD-FOAM INSULATED BUFFER TANK WITH INTERNAL POLYWARM® COATING FOR COOLING-HEATING SYSTEMS

PRESSURE	TEMPERATURE
Pmax	Tmin/Tmax
7 bar	-10 / +90 °C

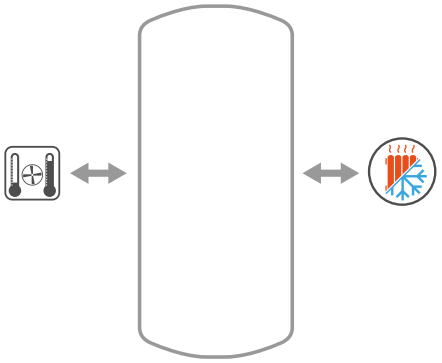

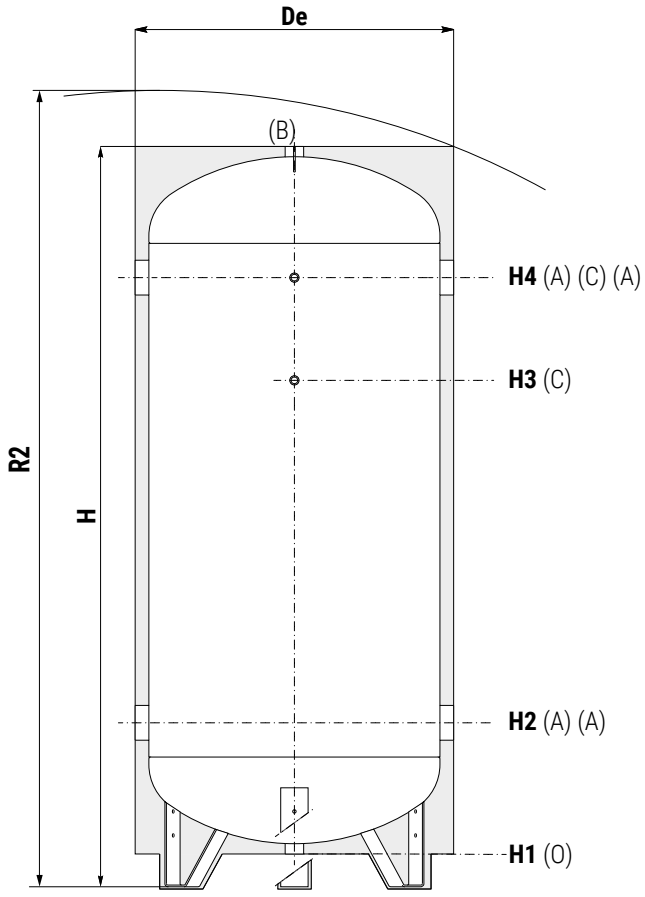

A	System connections
B	Safety valve
C	Connection for instrumentation G 1/2" F
O	Drain

VOLANO BS VOLANO BS COOLING-HEATING WBL

Model	Weight	Volume	De	H	R2	H1	H2	H3	H4	B-O	A	C
	[Kg]	[lt]				[mm]				Connections F		
100	32	99	450	1010	1110	78	292	597	792	1"1/4	1"1/2	1/2"
200	53	187	510	1410	1505	73	302	932	1177	1"1/4	1"1/2	1/2"
300	67	288	620	1520	1650	134	409	999	1244	1"1/4	2"	1/2"
500	101	496	750	1795	1985	85	404	1204	1454	1"1/4	3"	1/2"
800	147	788	850	2100	2305	85	371	1371	1671	1"1/4	3"	1/2"
1000	170	1034	950	2190	2435	105	483	1483	1783	1"1/2	3"	1/2"

Products designed and manufactured for using within temperature and pressure limits in accordance to Art. 4.3 Directive 2014/68/EU (P.E.D.)

VOLANO **BS COOLING-HEATING - INOX**

HARD-FOAM INSULATED STAINLESS STEEL BUFFER TANK FOR COOLING-HEATING SYSTEMS



STAINLESS STEEL

APPLICATION AND TECHNICAL DESCRIPTION
Storage of chilled water for cooling systems.
These buffers have rigid insulation and external galvanized and painted metallic cover.
They are used to increase the thermal inertia and, for those installations with low water-capacity, avoiding that the chilling generator is continuously working.

MATERIAL
Stainless steel.
EXTERNAL LINING
Pre-painted galvanized metal sheet, grey color.
INSULATION
Polyurethane hard foam with high thermal insulation performance.
WARRANTY
5 years – See general terms and conditions of sale.

		Installation type	Model	Art. Nr.	Energy efficiency class
	**VOLANO BS COOLING-HEATING XBL** PRE-PAINTED GALVANIZED METAL SHEET	OUTDOOR	**100**	3001012310001	**C**
			200	3001012310002	**C**
			300	3001012310003	**C**
			500	3001012310004	**C**
			800	3001012310005	**C**
			1000	3001012310006	**C**

EXAMPLE OF INSTALLATION WITH **VOLANO BS COOLING-HEATING**

01	Generator
02	Circulation group
03	VOLANO BS COOLING-HEATING
04	Expansion vessel
05	Motorized 3-way valve

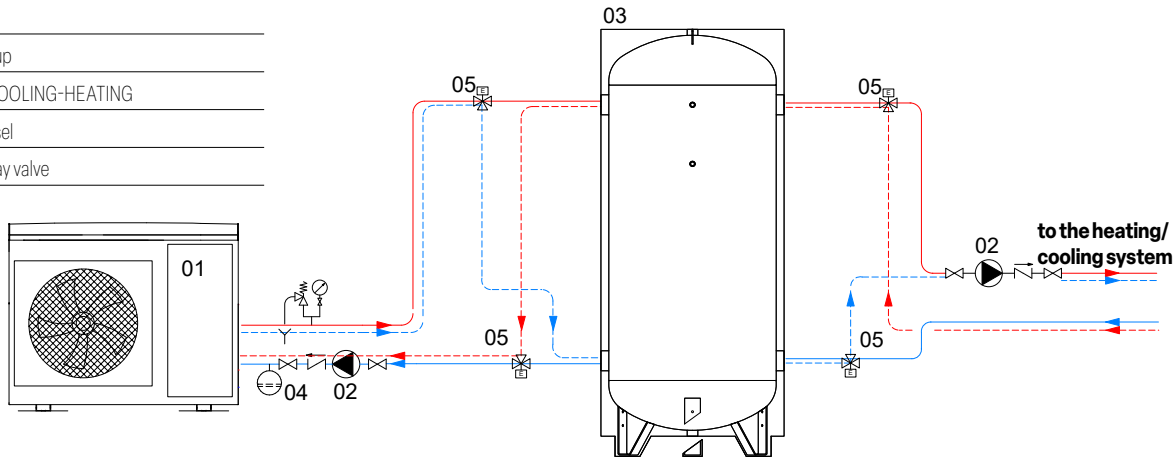

The following schemes are purely illustrative. To realize the installation, always refer to a qualified technician.

Products designed and manufactured for using within temperature and pressure limits in accordance to Art. 4.3 Directive 2014/68/EU (P.E.D.)

VOLANO **BS COOLING-HEATING - INOX**

HARD-FOAM INSULATED STAINLESS STEEL BUFFER TANK FOR COOLING-HEATING SYSTEMS

PRESSURE	TEMPERATURE
Pmax	Tmin/Tmax
7 bar	-30 / +95 °C

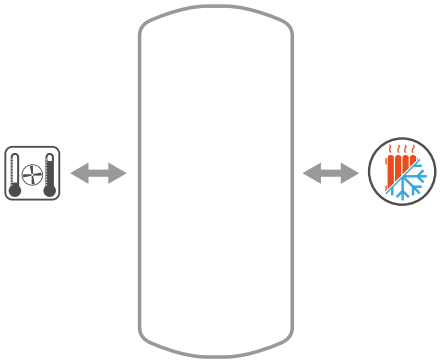

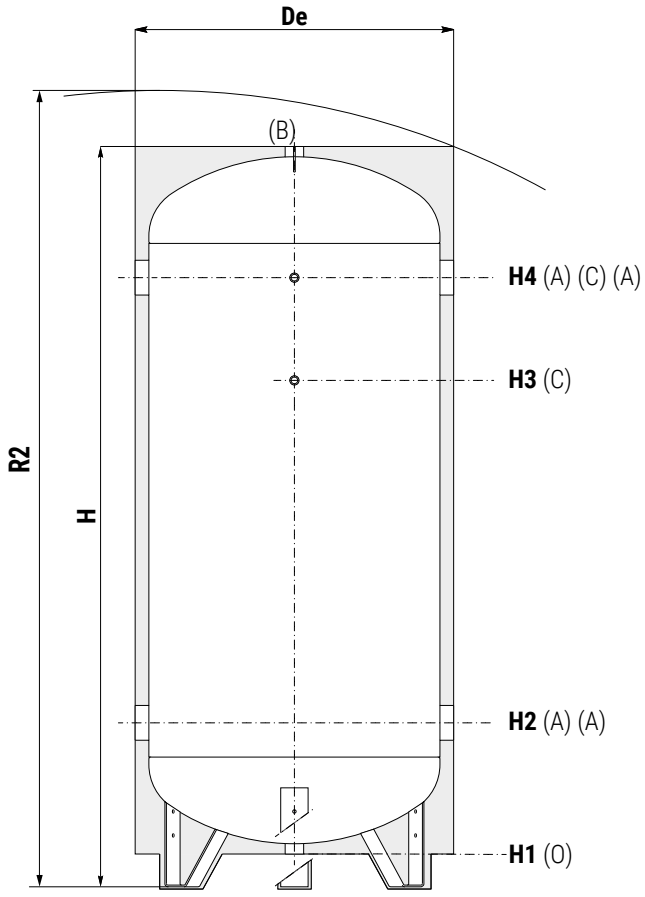

A	System connections
B	Safety valve
C	Connection for instrumentation G 1/2" F
O	Drain

VOLANO BS COOLING-HEATING XBL

Model	Weight	Volume	De	H	R2	H1	H2	H3	H4	B-O	A	C
	[Kg]	[lt]				[mm]				Connections F		
100	32	99	450	1010	1110	78	292	597	792	1"1/4	1"1/2	1/2"
200	53	187	510	1410	1505	73	302	932	1177	1"1/4	1"1/2	1/2"
300	67	288	620	1520	1650	134	409	999	1244	1"1/4	2"	1/2"
500	101	496	750	1795	1985	85	404	1204	1454	1"1/4	3"	1/2"
800	147	788	850	2100	2305	85	371	1371	1671	1"1/4	3"	1/2"
1000	170	1034	950	2190	2435	105	483	1483	1783	1"1/2	3"	1/2"

Products designed and manufactured for using within temperature and pressure limits in accordance to Art. 4.3 Directive 2014/68/EU (P.E.D.)

CHILLED WATER STORAGE TANK **ZBL**

VERTICAL GALVANIZED CHILLED WATER TANK



APPLICATION AND TECHNICAL DESCRIPTION
Storage of chilled water for cooling systems.
These buffers have rigid insulation and external galvanized and painted metallic cover.
They are used to increase the thermal inertia and, for those installations with low water-capacity, avoiding that the chilling generator is continuously working.
MATERIAL
Galvanized mild steel.

EXTERNAL LINING
Pre-painted galvanized metal sheet, grey color.
INSULATION
Polyurethane hard foam with high thermal insulation performance.
WARRANTY
5 years – See general terms and conditions of sale.

PROMPT AVAILABILITY

GALVANIZED



CHILLED WATER STORAGE TANK ZBL
PRE-PAINTED GALVANIZED METAL SHEET

OUTDOOR

Installation type	Model	Art. Nr.
	100	3001162310001
	200	3001162310002
	300	3001162310003
	500	3001162310004
	800	3001162310005
	1000	3001162310006
	1500	3001162310017
	2000	3001162310018

EXAMPLE OF INSTALLATION WITH **CHILLED WATER STORAGE TANK ZBL**

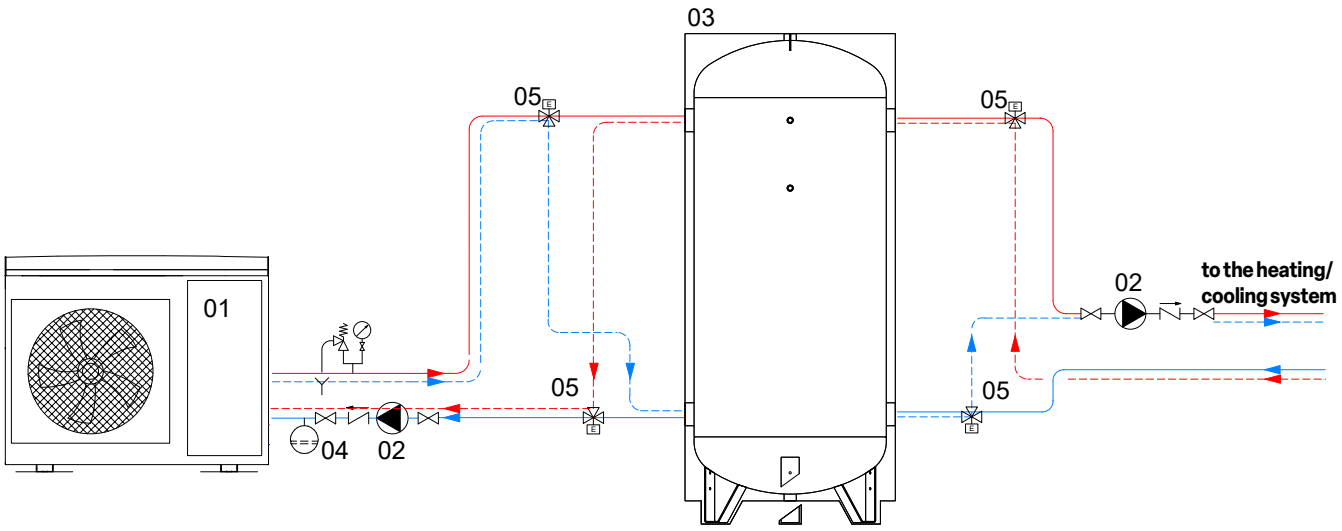

01	Generator	03	CHILLED WATER STORAGE TANK	05	Motorized 3-way valve
02	Circulation group	04	Expansion vessel		

The following schemes are purely illustrative. To realize the installation, always refer to a qualified technician.

Products designed and manufactured for using within temperature and pressure limits in accordance to Art. 4.3 Directive 2014/68/EU (P.E.D.)

CHILLED WATER STORAGE TANK **ZBL**

VERTICAL GALVANIZED CHILLED WATER TANK

PRESSURE	TEMPERATURE
Pmax	Tmin/Tmax
7 bar	-10 / +60 °C

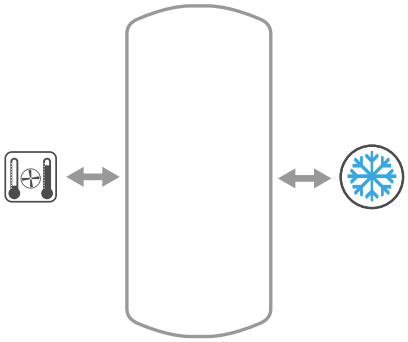

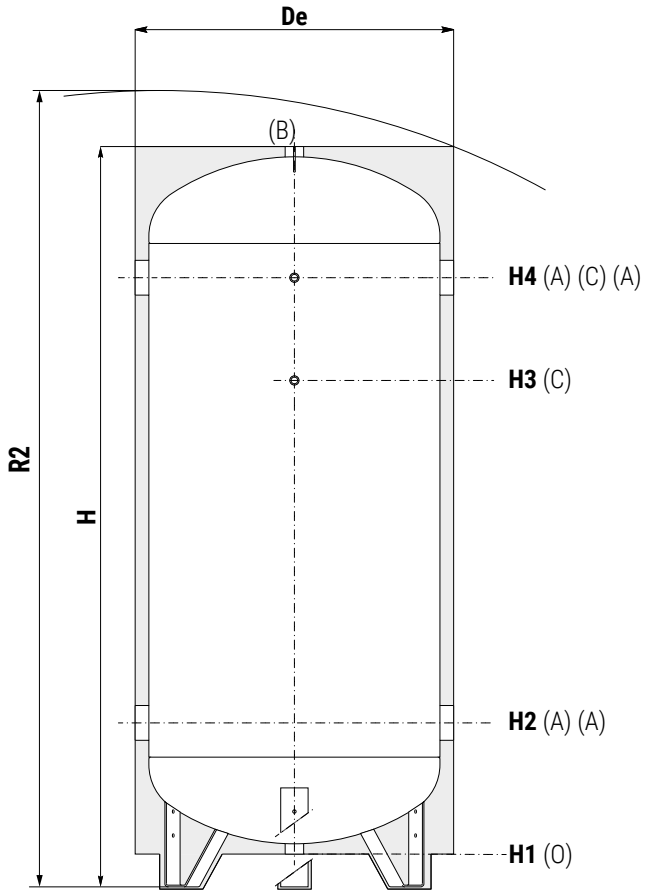

A	System connections
B	Safety valve
C	Connection for instrumentation G 1/2" F
O	Drain

CHILLED WATER STORAGE TANK ZBL

Model	Weight	Volume	De	H	R2	H1	H2	H3	H4	B-O	A	C
	[Kg]	[lt]				[mm]				Connections F		
100	32	99	450	1010	1110	73	287	592	792	1"1/4	1"1/2	1/2"
200	53	187	510	1410	1505	68	297	927	1177	1"1/4	1"1/2	1/2"
300	67	288	620	1520	1650	129	404	994	1244	1"1/4	2"	1/2"
500	101	496	730	1810	1960	121	441	1241	1491	1"1/4	3"	1/2"
800	147	788	830	2105	2270	113	458	1458	1758	1"1/4	3"	1/2"
1000	170	1034	940	2165	2365	96	479	1479	1779	1"1/2	3"	1/2"
1500	183	1432	1100	2355	2605	102	471	1681	1981	2"	3"	1/2"
2000	219	1970	1300	2425	2760	102	506	1716	2016	2"	3"	1/2"

Products designed and manufactured for using within temperature and pressure limits in accordance to Art. 4.3 Directive 2014/68/EU (P.E.D.)

CHILLED WATER STORAGE TANK **GC/ZC VT**

VERTICAL NOT TREATED CHILLED WATER TANK



APPLICATION AND TECHNICAL DESCRIPTION
The CHILLED WATER STORAGE TANK GC/ZC 20 are designed to be installed in air conditioning systems in order to increase inertia and, in those with a low water content, to minimise the number of starts per hour of the refrigeration unit in order to safeguard its life.
MATERIAL
GC models: Mild steel painted on the outside, internally untreated.
ZC models: Mild steel with hot-dip galvanising treatment to protect all surfaces.

EXTERNAL LINING
Blue PVC with plastic black caps for connections.
INSULATION
20 mm fixed polyethylene anti-condensation.
Not self-estinguishing version. Not removable from the tank.
WARRANTY
5 years – See general terms and conditions of sale.

PROMPT AVAILABILITY | MILD STEEL | GALVANIZED

MILD STEEL



CHILLED WATER STORAGE TANK GC VT
EXTERNAL LINING IN BLUE PVC



Installation type	Model	Art. Nr.
	100	3001162131101
	200	3001162131102
	300	3001162131103
	500	3001162131104
	800	3001162131105
	1000	3001162131106
	1500	3001162131107
	2000	3001162131108
	2500	3001162131113
	3000	3001162131109
	4000	3001162131110
	5000	3001162131112

GALVANIZED



CHILLED WATER STORAGE TANK ZC VT
EXTERNAL LINING IN BLUE PVC



Installation type	Model	Art. Nr.
	100	3001162130001
	200	3001162130002
	300	3001162130003
	500	3001162130004
	800	3001162130005
	1000	3001162130006
	1500	3001162130107
	2000	3001162130108
	2500	3001162130113
	3000	3001162130109
	4000	3001162130110
	5000	3001162130112

EXAMPLE OF INSTALLATION WITH **CHILLED WATER STORAGE TANK GC/ZC VT**

01	Generator
02	Circulation group
03	CHILLED WATER STORAGE TANK GC VT
04	Expansion vessel

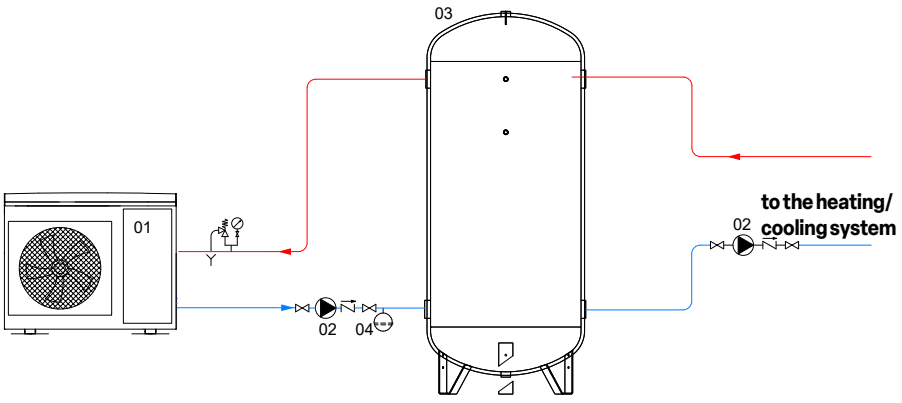

The following schemes are purely illustrative. To realize the installation, always refer to a qualified technician.

Products designed and manufactured for using within temperature and pressure limits in accordance to Art. 4.3 Directive 2014/68/EU (P.E.D.)

CHILLED WATER STORAGE TANK **GC/ZC VT**

VERTICAL NOT TREATED CHILLED WATER TANK

	PRESSURE	TEMPERATURE
	Pmax	Tmin/Tmax
GALVANIZED	7 bar	-10 / +60 °C
MILD STEEL	7 bar	-10 / +90 °C

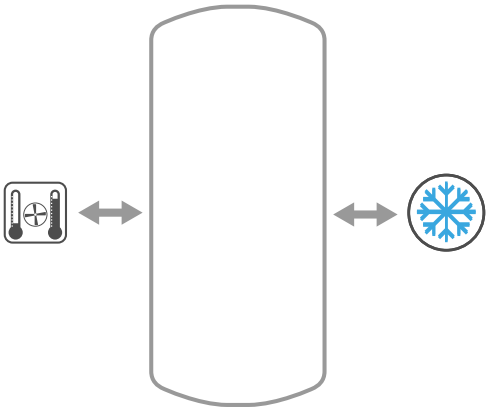

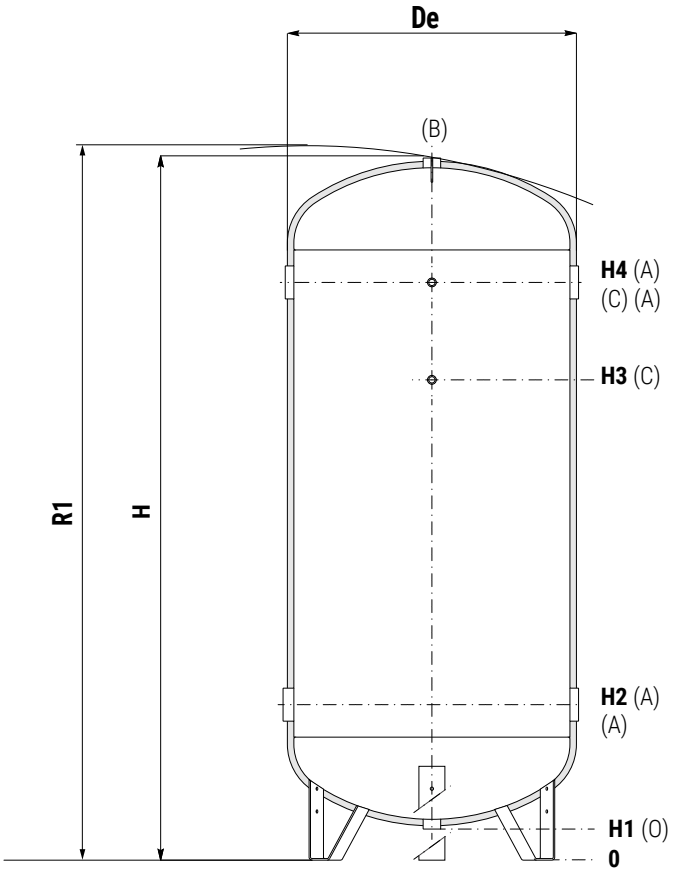

A	System connections
B	Safety valve
C	Connection for instrumentation G 1/2" F
O	Drain

INTERNAL BULKHEADS VERSION AVAILABLE ON REQUEST **(ONLY FOR MILD STEEL MODELS)**

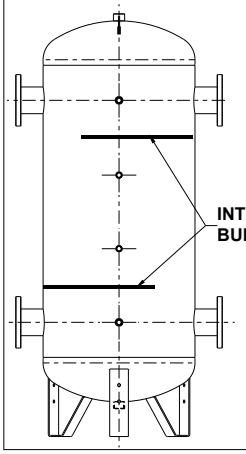

CHILLED WATER STORAGE TANK GC/ZC VT

Model	Weight	Volume	DE	H	R1	H1	H2	H3	H4	B-O	A	C
	[Kg]	[lt]				[mm]				Connections F		
100	32	101	440	1006	1017	73	287	592	792	1"1/4	1"1/2	1/2"
200	53	190	490	1407	1415	68	297	927	1177	1"1/4	1"1/2	1/2"
300	67	292	590	1518	1529	129	404	994	1244	1"1/4	2"	1/2"
500	101	501	690	1810	1821	121	441	1241	1491	1"1/4	3"	1/2"
800	147	788	790	2108	2119	108	458	1458	1758	1"1/4	3"	1/2"
1000	170	1034	890	2162	2178	96	479	1479	1779	1"1/2	3"	1/2"
1500	183	1432	990	2351	2386	121	490	1700	2000	2"	3"	1/2"
2000	219	1970	1140	2421	2437	105	509	1719	2019	2"	3"	1/2"
2500	274	2300	1290	2289	2304	149	619	1519	1819	2"	4"	1/2"
3000	321	2908	1290	2804	2826	149	619	1919	2319	2"	4"	1/2"
4000	442	3749	1440	2878	2904	133	648	1948	2348	2"	4"	1/2"
5000	565	4964	1640	2916	2948	111	656	1956	2356	2"	4"	1/2"

Products designed and manufactured for using within temperature and pressure limits in accordance to Art. 4.3 Directive 2014/68/EU (P.E.D.)

CHILLED WATER STORAGE TANK **GC/ZC OR**

HORIZONTAL NOT TREATED CHILLED WATER TANK



APPLICATION AND TECHNICAL DESCRIPTION
The CHILLED WATER STORAGE TANK GC/ZC 20 are designed to be installed in air conditioning systems in order to increase inertia and, in those with a low water content, to minimise the number of starts per hour of the refrigeration unit in order to safeguard its life.
MATERIAL
GC models: Mild steel painted on the outside, internally untreated.
ZC models: Mild steel with hot-dip galvanising treatment to protect all surfaces.

EXTERNAL LINING
Blue PVC with plastic black caps for connections.
INSULATION
20 mm fixed polyethylene anti-condensation.
Not self-estinguishing version. Not removable from the tank.
WARRANTY
5 years – See general terms and conditions of sale.

MILD STEEL | GALVANIZED

MILD STEEL



ACQUA REFRIGERATA GC OR
EXTERNAL LINING IN BLUE PVC

INDOOR

Installation type	Model	Art. Nr.
	100	3001161031001
	200	3001161031002
	300	3001161031003
	500	3001161031004
	800	3001161031005
	1000	3001161031006
	1500	3001161031007
	2000	3001161031008
	2500	3001161031013
	3000	3001161031009
	4000	3001161031010
	5000	3001161031012

GALVANIZED



ACQUA REFRIGERATA ZC OR
EXTERNAL LINING IN BLUE PVC

INDOOR

Installation type	Model	Art. Nr.
	100	3001161030001
	200	3001161030002
	300	3001161030003
	500	3001161030004
	800	3001161030005
	1000	3001161030006
	1500	3001161030107
	2000	3001161030108
	2500	3001161030113
	3000	3001161030109
	4000	3001161030110
	5000	3001161030112

EXAMPLE OF INSTALLATION WITH **CHILLED WATER STORAGE TANK GC/ZC OR**

01	Generator
02	Circulation group
03	CHILLED WATER STORAGE TANK GC OR
04	Expansion vessel

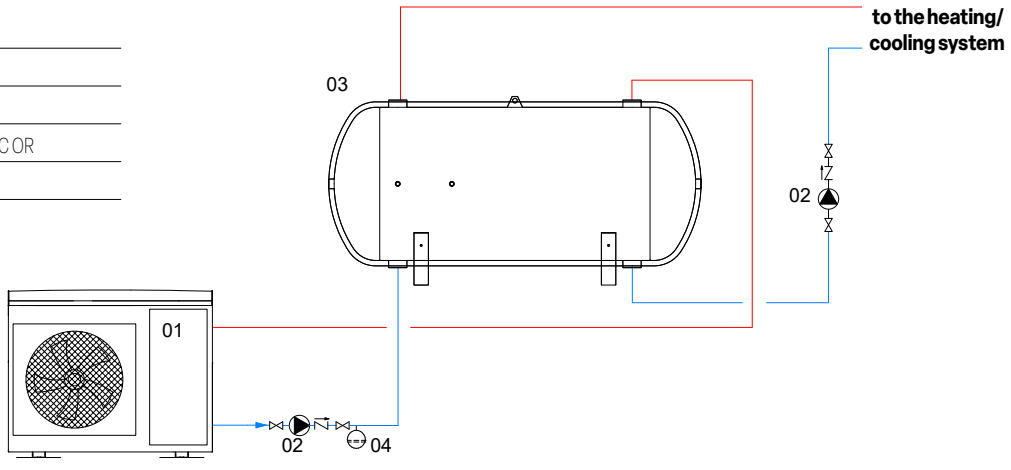

The following schemes are purely illustrative. To realize the installation, always refer to a qualified technician.

Products designed and manufactured for using within temperature and pressure limits in accordance to Art. 4.3 Directive 2014/68/EU (P.E.D.)

CHILLED WATER STORAGE TANK **GC/ZC OR**

HORIZONTAL NOT TREATED CHILLED WATER TANK

	PRESSURE	TEMPERATURE
	Pmax	Tmin/Tmax
GALVANIZED	7 bar	-10 / +60 °C
MILD STEEL	7 bar	-10 / +90 °C

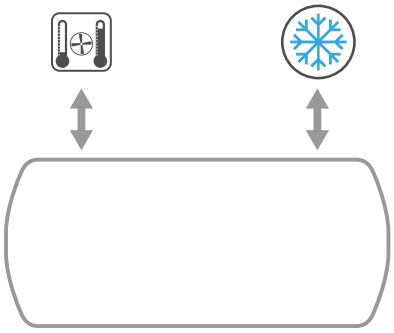

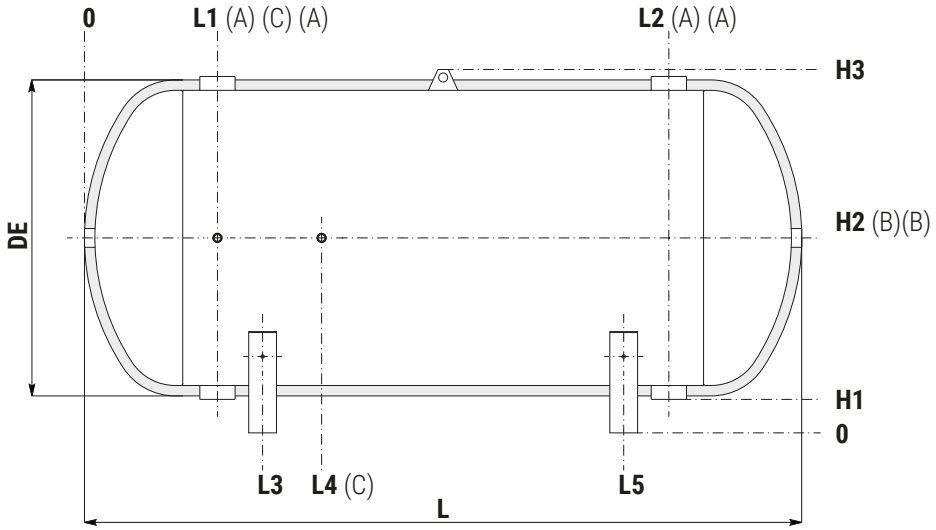

A	System connections
B	Safety valve/Auxiliary connection
C	Connection for instrumentation G 1/2" F

CHILLED WATER STORAGE TANK GC/ZC OR

Model	Weight	Volume	DE	L	L1	L2	L3	L4	L5	H1	H2	H3	B	A	C
	[Kg]	[lt]	[mm]										Connections F		
100	32	99	440	934	215	720	290	415	645	63	293	523	1"1/4	1"1/2	1/2"
200	53	187	490	1339	230	1110	335	480	1005	61	316	571	1"1/4	1"1/2	1/2"
300	68	288	590	1389	275	1115	365	525	1025	115	425	760	1"1/4	2"	1/2"
500	102	496	690	1689	320	1370	415	570	1275	107	472	857	1"1/4	3"	1/2"
800	148	788	790	2000	350	1650	480	650	1520	101	516	951	1"1/4	3"	1/2"
1000	170	1034	890	2066	383	1683	513	683	1553	96	561	1046	1"1/2	3"	1/2"
1500	184	1432	990	2250	370	1880	505	670	1745	82	597	1142	2"	3"	1/2"
2000	220	1970	1140	2320	405	1915	525	705	1795	73	663	1283	2"	3"	1/2"
2500	284	2300	1290	2140	470	1670	620	770	1520	154	829	1524	2"	4"	1/2"
3000	330	2908	1290	2640	470	2170	620	870	2020	154	829	1524	2"	4"	1/2"
4000	452	3749	1440	2730	515	2215	665	915	2065	142	892	1662	2"	4"	1/2"
5000	574	4964	1640	2790	545	2245	695	945	2095	125	975	1845	2"	4"	1/2"

Products designed and manufactured for using within temperature and pressure limits in accordance to Art. 4.3 Directive 2014/68/EU (P.E.D.)

PRESSURE VESSELS AND COMPRESSED AIR RECEIVERS






Model	PRESSURE VESSEL GALVANIZED Z PED	PRESSURE VESSEL STAINLESS STEEL X PED	STORAGE TANK GALVANIZED Z SC	STORAGE TANK STAINLESS STEEL X SC
Page nr.	402	406	408	410
Material	Mild steel	Stainless steel	Mild steel	Stainless steel
External finishing	• Hot-dip galvanizing	• Stainless steel	• Hot-dip galvanizing	• Stainless steel
Internal finishing	• Hot-dip galvanizing	• Stainless steel	• Hot-dip galvanizing	• Stainless steel
Temperature/ Pression	0/+50 °C 8 / 11,76, / 12 bar	-10/+50 °C 8 bar	0/+50 °C 6 bar	0/+50 °C 6 bar
Application	Air cushion pressure vessels	Air cushion pressure vessels	Cold water storage	Cold water storage
Directive	Directive 2014/68/UE	Directive 2014/68/UE	-	-
Installation	Floor standing	Floor standing	Floor standing	Floor standing
Available range	100 ÷ 10.000	100 ÷ 5.000	50 ÷ 2.000	100 ÷ 5.000
Manhole / Handhol	• Manhole • Handhole	• Manhole • Handhole	-	-











PAINTED EXPANSION VESSELS-MEMBRANE	GALVANIZED EXPANSION VESSELS-MEMBRANE	COMPRESSED AIR RECEIVERS SPVS	COMPRESSED AIR RECEIVERS P.E.D.	COMPRESSED AIR RECEIVERS P.E.D. (11 -15bar)
412	414	418	420	422
Mild steel	Mild steel	Mild steel	Mild steel	Mild steel
• External painting	• Hot-dip galvanizing	• Hot-dip galvanizing • External painting	• Hot-dip galvanizing • External painting	• Hot-dip galvanizing • External painting
• Mild steel	• Hot-dip galvanizing	• Hot-dip galvanizing • Food internal coating Polywarm®	• Hot-dip galvanizing • Food internal coating Polywarm®	• Hot-dip galvanizing • Food internal coating Polywarm®
-10/+99 °C 8 ÷ 10 bar	-10/+99 °C 8 ÷ 10 bar	-10/+100 °C 11 / 15 bar	-10/+100 °C 8 / 12 / 15 bar	-10/+100 °C 11 -15 bar
Expansion vessel with membrane	Expansion vessel with membrane	Compressed air / nitrogen receivers	Compressed air / nitrogen receivers	Compressed air / nitrogen receivers
Directive 2014/68/UE	Directive 2014/68/UE	Directive 2014/29/CE	Directive 2014/68/UE - P.E.D.	Directive 2014/68/UE - P.E.D.
Floor standing	Floor standing	Floor standing	Floor standing	Floor standing
50 ÷ 500	50 ÷ 500	100 ÷ 900	200 ÷ 10.000	100 ÷ 900
-	-	-	• Manhole • Handhole	• Manhole • Handhole

WATER PRESSURE TANKS

TESTED PRESSURIZED TANKS P.E.D.
CE marked storage tanks for pressurized water in compliance with Directive 2014/68/UE P.E.D.
The range of tested pressurized tanks PED includes all the pressurized storages designed for water-lifting systems, for accumulation of compressed air or for closed expansion vessels.
Air-cushion pressure vessels and membrane expansion vessels are part of this family. These products are manufactured according the European Directive for pressurized devices (2014/68/UE Pressure Equipment Device) and are designed to contain dangerous fluids at high pressure and/or temperature.







THE PRESSURE EQUIPMENT DEVICE (P.E.D.) DIRECTIVE
Any device that overcomes the maximum working pressure limit of **0,5 BAR** is subject to design and manufacture indications according to the directive 2014/68/EU.

This directive establishes an index of hazardousness of the equipment (tanks in our case), determined according to the type of fluid contained, the maximum temperature admissible, the pressure and the capacity of the tank.

Fluids are categorized in 2 groups:
- **GROUP 1**, hazardous fluids (explosive, flammable, easily flammable, highly flammable, oxidizer, toxic and highly toxic)
- **GROUP 2**, not hazardous fluids (all fluids that are not included in **GROUP 1**)

Note: all the Cordivari products involved in the application of the **PED** directive are intended to contain fluids belonging to GROUP 2 (water, steam, compressed air).
The categorization of the equipment in accordance with the level of hazardousness is established in the Annex II of the directive that defines six classes:

Category	Application of the PED directive	CE Marking	Reference
PS ≤ 0,5 and specific exceptions	Not applicable	No	Art. 1.1 e 1.2
PS > 0,5 in conditions of low hazard level	Applicable	No	Art. 4.3
Category I	Applicable	Yes	Table from 1 to 9 Annex II
Category II	Applicable	Yes	
Category III	Applicable	Yes	
Category IV	Applicable	Yes	

USE OF PRESSURE EQUIPMENT ACCORDING TO ITALIAN LAWS AND REGULATIONS
The use of pressure equipment is regulated in Italy by Ministerial Decree No. 329/2004.
This decree establishes requirements for the correct operation of pressure equipments both during installation and start-up and in terms of subsequent periodic checks. On this regard, following activities are defined:

- **DECLARATION OF COMMISSIONING:** Is intended the declaration to be submitted to National Labour Security Institute and to the competent for the territory Sanitary Office, containing the following annexes according to the provisions of art. 6.1 of Ministerial Decree no. 329/2004.
- **FIRST INSTALLATION COMMISSIONING:** control consisting in verifying by competent approved body (Labour or Medical Institute) that the tank has been correctly installed in compliance with user manual and maintenance issued by the manufacturer of the equipment and in compliance with the local laws in force.
- **PERIODICAL RE-QUALIFICATION:** compulsory periodic checks to be carried out by authorised bodies on pressure equipments in service under responisibility of user, in order to check the compliance for a continuous operation.
- **OPERATION CHECK:** performed to assess the compliance of the actual conditions of use of the equipment with what is reported in the declaration of commissioning and in manual. During this phase, the safety accessories are also subjected to a functional check.
- **INTEGRITY CHECK:** this is carried out through a visual examination both inside and outside the pressure equipment and through instrumental checks that determine whether the equipment is still within the limits set by the manufacturer, e.g. by checking the thickness.

DECREE 329 states exclusions cases (total or partial) from the operational checks, according to following scheme.

CAPACITY V [liters]	MAXIMUM OPERATING PRESSURE PS [bar]	PS x V [bar x liter]	POTENTIAL CORROSION INTERNAL OR EXTERNAL (*)	DECLARATION OF COMMISSIONING	COMMISSIONING CHECK	PERIODIC REQUALIFICATION
≤ 25	whatever	-	-	NO	NO	NO (**)
25 < V ≤ 50	≤ 12	-	-	NO	NO	
> 50	≤ 12	≤ 8000	NO	YES	NO	
	≤ 12	≤ 8000	YES	YES	NO	YES (***)
	≤ 12	≤ 12000	NO	YES	YES	NO (**)

(*) The absence of corrosive phenomena inside or outside the equipments can be declared by the designer in the declaration of commissioning only for fluid under Group 2 , except steam.

(**) The user must always follow the instructions in the operating and maintenance manual.

(***) Always to be carried out by an approved body.
Categories I and II Functional check Four-yearly - Integrity check Ten-yearly
Categories III and IV Operation check Every four years - Integrity check: Every ten years

We recommend always to check the national laws in force at place of installation for the use of pressure equipment.

PRESSURE VESSEL **GALVANIZED Z PED VT**

CERTIFIED VERTICAL GALVANIZED PRESSURE VESSEL (DIRECTIVE 2014/68/UE)



APPLICATION E TECHNICAL DESCRIPTION

Air cushion pressure vessels.

Suitable to supply water to the highest floors of the buildings and to compensate the water shortage of the water-works. The air cushion pressure vessels Z PED VT are made for water pumping and they work as a pressured water lung that, if correctly dimensioned, can limit the self-starting of the pump.

These products are made in galvanized mild steel.

ANTI-CORROSION TREATMENT

These tanks are galvanized inside and outside, with immersion in a pool of fused zinc with pureness not below than 99,99% (Uni EN 1179)

DOCUMENTS ATTACHED

- CE certification
- User Instructions

CERTIFICATIONS

The Z PED pressure vessels are made according to the security policy of the standard 2014/68/UE that rules the pressurized products. Under surveillance of the Notified Body, a CE mark is stuck on them as well as the following project data that characterize the product:

- Pressurized fluid: water + air or nitrogen
- Fluid group: 2
- Max operating pressure: see the table chart
- Temperature: -10/+50 °C

INSULATION (ON REQUEST)

Closed cell anti-condensation polyethylene foam glued to the body of the tank (not removable). Non self-extinguishing version, thickness 20 mm.

WARRANTY

2 years-See general sales conditions and warranty.

PROMPT AVAILABILITY

CE

		Working Pressure [Bar]	Model	Art. Nr.	Working Pressure [Bar]	Model	Art. Nr.	
	**AUTOCL. Z VT** (insulation on request)	8	**100**	3051171990009	**11,76**	**100**	3051171990040	
			200	3051171990010		**200**	3051171990041	
			300	3051171990011		**300**	3051171990042	
			500	3051171990012		**500**	3051171990043	
			750	3051171990013	**12**	**750**	3051171990077	
			1000	3051171990014		**1000**	3051171990078	insulation with surcharge
			1500	3051171990015		**1500**	3051171990029	
			2000	3051171990016		**2000**	3051171990030	
			2500	3051171990017		**2500**	3051171990031	
			3000	3051171990068		**3000**	3051171990082	
			4000	3051171990019		**4000**	3051171990033	
			5000 ø1450	3051171990020		**5000** ø1450	3051171990035	
			8000	3051172020021		**8000**	3051172020018	-
			10000	3051172020022		**10000**	3051172020019	-
	**AUTOCL. Z VT WITH MANHOLE** (insulation on request)	8	**5000** ø1600	3051172020007	**12**	**4000**	3051172020008	
			8000	3051172020011		**5000** ø1450	3051172020004	
			10000	3051172020012		**8000**	3051172020013	
						10000	3051172020014	

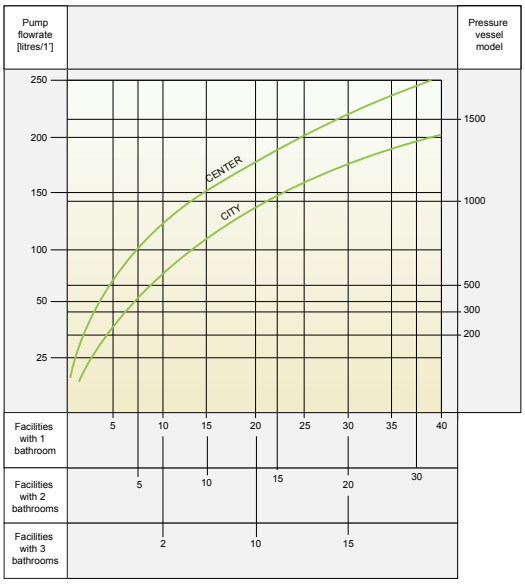

To quickly determine both the capacity of the pressure vessel and the pump according to the number of the flats, you can use the following chart (always valid for 15 self-starting per hour).

PRESSURE VESSEL **GALVANIZED Z PED VT**

CERTIFIED VERTICAL GALVANIZED PRESSURE VESSEL (DIRECTIVE 2014/68/UE)

PRESSURE	TEMPERATURE
Pmax	Tmax
[see table chart]	-10 / +50 °C

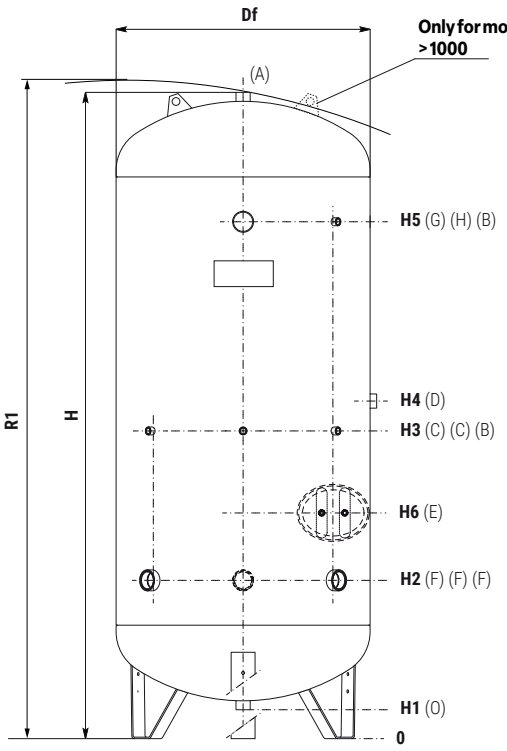

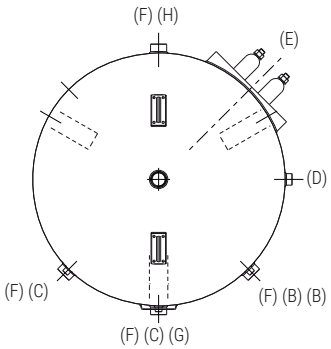

A	Safety valve
B	Visual level indicator
C	Instrumentation
D	Level switch – Pressure switch
E	Manhole (only on models > 4000)
F	Input - use
G	Instrumentation 2" (only on models > 5000)
H	Level switch – Pressure switch (only on models > 3000)
O	Drain



The LEVEL INDICATOR KIT is available on demand. See the Accessories section for further information.

	Model	Df	De*	H	R1	H1	H2	H3	H4	H5	H6	O-A	F	H	B-C	D	G
		[mm]										Connections F					
WORKING RESSURE 8 bar	**100**	400	440	1055	1065	90	350	500	600	800	-	1"1/4	1"	-	1/2"	1"1/4	-
	200	450	490	1420	1435	85	355	655	755	1155	-	1"1/4	1"	-	1/2"	1"1/4	-
	300	550	590	1530	1555	140	435	735	835	1235	-	1"1/4	1"1/4	-	1/2"	1"1/4	-
	500	650	690	1825	1840	135	455	855	955	1505	-	1"1/4	1"1/2	-	1/2"	1"1/4	-
	750	790	830	1865	1880	110	510	960	1060	1460	-	1"1/4	2"	-	1/2"	1"1/4	-
	1000	790	830	2380	2395	110	510	1010	1110	1960	-	1"1/4	2"	-	1/2"	1"1/4	-
	1500	950	990	2470	2490	110	570	1070	1170	2020	-	2"	2"	-	1/2"	1"1/4	-
	2000	1100	1140	2535	2560	100	595	1095	1195	2045	-	2"	2"	-	1/2"	1"1/4	-
	2500	1200	1240	2660	2690	140	680	1280	1380	2130	-	2"	3"	-	1/2"	1"1/4	-
	3000	1200	1240	3000	3075	135	700	1300	1400	2400	-	2"	3"	-	1/2"	2"	-
	4000	1450	1490	3000	3030	115	710	1310	1410	2410	-	2"	3"	2"	1/2"	2"	-
	5000	1450	1490	3500	3525	115	710	1610	1710	2910	-	2"	3"	2"	1/2"	2"	-
	5000	1600	1640	3050	3090	100	725	1325	1425	2425	1025	2"	3"	2"	1/2"	2"	-
	8000	1650	1690	4205	4270	200	905	1905	2033	3506	1155	2"	4"	2"	1/2"	2"	2"
	10000	1650	1690	5205	5270	200	905	2255	2478	4506	1155	2"	4"	2"	1/2"	2"	2"

Model 5000 lt (Ø 1600) included with manhole.
*(*De = diameter with insulation on request)*

		Model	Df	De*	H	R1	H1	H2	H3	H4	H5	H6	O-A	F	H	B-C	D	G
			[mm]										Connections F					
WORKING RESSURE	11,76 bar	**100**	400	440	1055	1065	90	350	500	600	800	-	1"1/4	1"	-	1/2"	1"1/4	-
		200	450	490	1420	1435	85	355	655	755	1155	-	1"1/4	1"	-	1/2"	1"1/4	-
		300	550	590	1530	1555	140	435	735	835	1235	-	1"1/4	1"1/4	-	1/2"	1"1/4	-
		500	650	690	1825	1840	135	455	855	955	1505	-	1"1/4	1"1/2	-	1/2"	1"1/4	-
	12 bar	**750**	790	830	1865	1880	110	510	960	1060	1460	-	1"1/4	2"	-	1/2"	1"1/4	-
		1000	790	830	2380	2395	110	510	1010	1110	1960	-	1"1/4	2"	-	1/2"	1"1/4	-
		1500	950	990	2470	2490	110	570	1070	1170	2020	-	2"	2"	-	1/2"	1"1/4	-
		2000	1100	1140	2535	2560	100	595	1095	1195	2045	-	2"	2"	-	1/2"	1"1/4	-
		2500	1200	1240	2660	2690	140	680	1280	1380	2130	-	2"	3"	-	1/2"	1"1/4	-
		3000	1200	1240	3000	3075	135	700	1300	1400	2400	-	2"	3"	-	1/2"	2"	-
		4000	1450	1490	3000	3030	115	710	1310	1410	2410	1010	2"	3"	2"	1/2"	2"	-
		5000	1450	1490	3500	3525	115	710	1610	1710	2910	1010	2"	3"	2"	1/2"	2"	-
		8000	1650	1690	4205	4270	200	905	1905	2033	3506	1155	2"	4"	2"	1/2"	2"	2"
		10000	1650	1690	5205	5270	200	905	2255	2478	4506	1155	2"	4"	2"	1/2"	2"	2"

**De = diameter with insulation on request*

PRESSURE VESSEL **GALVANIZED Z PED OR**

CERTIFIED HORIZONTAL GALVANIZED PRESSURE VESSEL (DIRECTIVE 2014/68/UE)



APPLICATION E TECHNICAL DESCRIPTION
Air cushion pressure vessels.
Suitable to supply water to the highest floors of the buildings and to compensate the water shortage of the water-works. The air cushion pressure vessels Z PED VT are made for water pumping and they work as a pressured water lung that, if correctly dimensioned, can limit the self-starting of the pump.
These products are made in galvanized mild steel.

ANTI-CORROSION TREATMENT
These tanks are galvanized inside and outside, with immersion in a pool of fused zinc with pureness not below than 99,99% (Uni EN 1179)

DOCUMENTS ATTACHED
- CE certification
- User Instructions

CERTIFICATIONS
The Z PED pressure vessels are made according to the security policy of the standard 2014/68/UE that rules the pressurized products. Under surveillance of the Notified Body, a CE mark is stuck on them as well as the following project data that characterize the product:
- Pressurized fluid: water + air or nitrogen
- Fluid group: 2
- Max operating pressure: see the table chart
- Temperature: -10/+50 °C

INSULATION (ON REQUEST)
Closed cell anti-condensation polyethylene foam glued to the body of the tank (not removable). Non self-extinguishing version, thickness 20 mm.

WARRANTY
2 years-See general sales conditions and warranty.

CE



AUTOCL. Z OR
(insulation on request)

Max Pressure [Bar]	Model	Art. Nr.
8	100	3051170990009
	200	3051170990010
	300	3051170990011
	500	3051170990012
	750	3051170990013
	1000	3051170990014
	1500	3051170990015
	2000	3051170990016
	3000	3051170990068
	4000	3051170990019
	5000	3051170990020

Max Pressure [Bar]	Model	Art. Nr.
11,76	100	3051170990021
	200	3051170990022
	300	3051170990023
	500	3051170990024
12	750	3051170990077
	1000	3051170990078
	1500	3051170990040
	2000	3051170990030
	2500	3051170990041
	3000	3051170990082
	4000	3051170990042
	5000	3051170990044

On request:
Closed cell anti-condensation polyethylene foam glued to the body of the tank (not removable). Thickness 20 mm, anti-condensation. Surcharge +15%

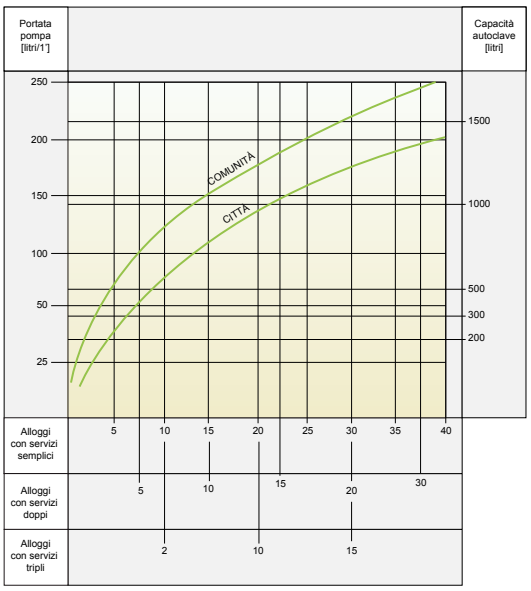

To quickly determine both the capacity of the pressure vessel and the pump according to the number of the flats, you can use the following chart (always valid for 15 self-starting per hour).

PRESSURE VESSEL **GALVANIZED Z PED OR**

CERTIFIED HORIZONTAL GALVANIZED PRESSURE VESSEL (DIRECTIVE 2014/68/UE)

PRESSURE	TEMPERATURE
Pmax	Tmax
[see table chart]	-10 / +50 °C

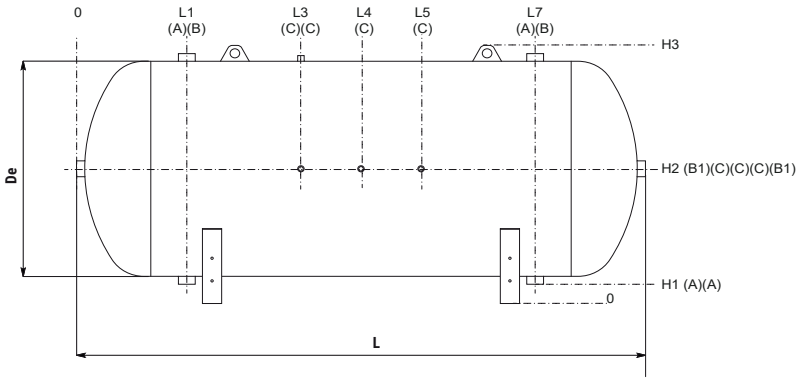

A	Input - use
B	Safety Valve/Instrumentation
B1	Safety Valve/Instrumentation
C	Instrumentation

	Model	De	L	L1	L2	L3	L4	L5	L6	L7	H1	H2	H3	B1	A-B	C
		[mm]												Connections F		
WORKING RESSURE 8 bar	**100**	400	955	230	300	338	478	618	655	725	69	294	518	1" 1/4	1"	1/2"
	200	450	1350	240	340	475	675	875	1010	1110	67	317	568	1" 1/4	1"	1/2"
	300	550	1399	285	370	500	700	900	1030	1115	119	424	762	1" 1/4	1" 1/4	1/2"
	500	650	1700	325	420	650	850	1050	1280	1375	115	470	870	1" 1/4	1" 1/2	1/2"
	750	790	1750	350	520	675	875	1075	1230	1400	107	532	987	1" 1/4	2"	1/2"
	1000	790	2250	350	520	900	1150	1400	1730	2000	107	532	987	1" 1/4	2"	1/2"
	1500	950	2340	415	565	1020	1170	1420	1775	1945	143	643	1196	2"	2"	1/2"
	2000	1100	2450	470	615	975	1225	1475	1835	1980	100	683	1280	2"	2"	1/2"
	3000	1200	2770	550	685	1085	1385	1685	2085	2220	140	784	1480	2"	3"	1/2"
	4000	1450	2890	600	745	1065	1445	1825	2145	2290	122	887	1670	2"	3"	1/2"
	5000	1450	3390	600	745	1315	1695	2075	2645	2790	122	887	1670	2"	3"	1/2"

		Model	De	L	L1	L2	L3	L4	L5	L6	L7	H1	H2	H3	B1	A-B	C
			[mm]												Connections F		
WORKING RESSURE	11,76 bar	**100**	400	960	240	310	345	480	615	650	720	75	305	535	1" 1/4	1"	1/2"
		200	450	1340	268	350	470	670	870	990	1072	75	330	615	1" 1/4	1"	1/2"
		300	550	1400	295	375	500	700	900	1025	1105	120	430	765	1" 1/4	1" 1/4	1/2"
		500	650	1700	320	450	650	850	1050	1250	1380	115	480	890	1" 1/4	1" 1/2	1/2"
	12 bar	**750**	790	1750	330	550	675	875	1075	1200	1420	107	532	987	1" 1/4	2"	1/2"
		1000	790	2250	330	550	875	1125	1375	1700	1920	107	532	987	1" 1/4	2"	1/2"
		1500	950	2360	420	570	930	1180	1430	1790	1940	117	622	1196	2"	2"	1/2"
		2000	1100	2450	470	615	975	1225	1475	1835	1980	100	683	1280	2"	2"	1/2"
		2500	1200	2520	510	650	1010	1260	1510	1870	2010	140	784	1480	2"	2"	1/2"
		3000	1200	2770	550	685	1085	1385	1685	2085	2220	140	784	1480	2"	3"	1/2"
		4000	1450	2890	600	745	1065	1445	1825	2145	2290	122	887	1670	2"	3"	1/2"
		5000	1450	3390	600	745	1315	1695	2075	2645	2790	122	887	1670	2"	3"	1/2"

PRESSURE VESSEL**STAINLESS STEEL 316L X PED VT**

CERTIFIED VERTICAL STAINLESS STEEL 316L PRESSURE VESSEL (DIRECTIVE 2014/68/UE)



PRESSURE	TEMPERATURE
Pmax	Tmax
8 bar	-10 / +50 °C

APPLICATION E TECHNICAL DESCRIPTION

Air cushion pressure vessels.
Suitable to supply water to the highest floor of the buildings and to compensate the water shortage of the water-works.
The air cushion pressure vessels X PED VT are made for the water pumping and they work as a pressured water lung that, if correctly dimensioned, can limit the self-starting of the pump. These products are entirely made in Stainless steel 316L.

DOCUMENTS ATTACHED

- CE certification
- User Instructions

CERTIFICATIONS

The X PED pressure vessels are made according to the security policy of the standard 2014/68/UE that rules the pressurized products. Under surveillance of the Notified Body, a CE mark is stuck on them as well as the following project data that characterize the product:

- Pressurized fluid: water + air or nitrogen
- Fluid group: 2
- Max operating pressure: see the table chart
- Temperature: -10/+50 °C

WARRANTY

2 years-See general sales conditions and warranty.



AUTOCL. X PED VT



INDOOR

Installation type	Model	Art. Nr.
	100	3051052010035
	200	3051052010036
	300	3051052010037
	500	3051052010038
	750	3051052010039
	1000	3051052010040
	1500	3051052010027
	2000	3051052010028
	3000	3051052010029
	4000	3051052010030
	5000	3051052010031

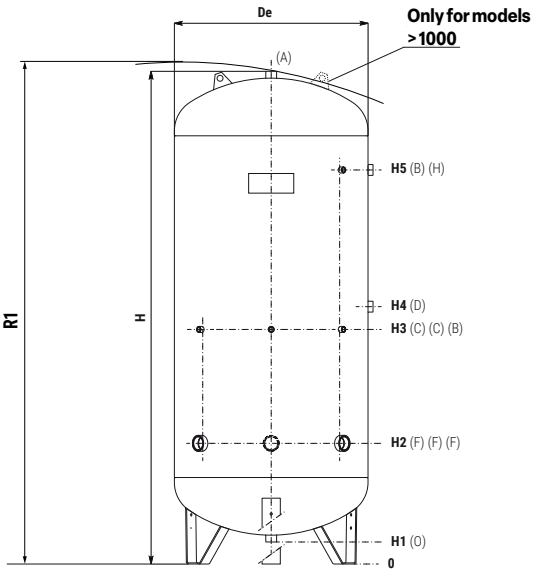

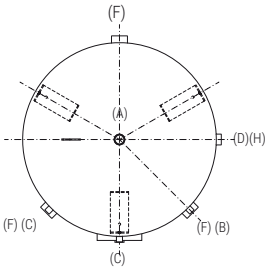

A	Safety valve
B	Visual level indicator
C	Instrumentation
D	Level switch – Pressure switch
F	Input - use
H	Level switch – Pressure switch
O	Drain

Model	De	H	R1	H1	H2	H3	H4	H5	A-D-O	F	B-C	H
	[mm]								Connections F			
100	400	1050	1095	76	350	500	600	770	1"1/4	1"	1/2"	-
200	450	1450	1490	71	350	650	750	1150	1"1/4	1"	1/2"	-
300	550	1550	1585	135	440	740	840	1240	1"1/4	1"1/4	1/2"	-
500	650	1840	1880	131	460	860	960	1510	1"1/4	1"1/2	1/2"	1"
750	750	2130	2170	108	510	960	1068	1718	1"1/4	2"	1/2"	1"
1000	750	2630	2665	108	510	960	1100	1600	1"1/4	2"	1/2"	1"
1500	1000	2290	2350	100	590	1100	1200	1800	1"1/4	2"	1/2"	1"
2000	1000	2790	2840	100	590	1100	1200	2100	1"1/4	2"	1/2"	1"
3000	1200	2940	2955	115	675	1275	1380	2380	1"1/4	3"	1/2"	1"
4000	1450	2973	3070	84	679	1279	1379	2379	1"1/4	3"	1/2"	1"
5000	1450	3473	3555	84	679	1579	1679	2879	1"1/4	3"	1/2"	1"

PRESSURE VESSEL**STAINLESS STEEL 316L X PED VT**

CERTIFIED HORIZONTAL STAINLESS STEEL 316L PRESSURE VESSEL (DIRECTIVE 2014/68/UE)



APPLICATION E TECHNICAL DESCRIPTION

Air cushion pressure vessels.
Suitable to supply water to the highest floor of the buildings and to compensate the water shortage of the water-works.
The air cushion pressure vessels X PED VT are made for the water pumping and they work as a pressured water lung that, if correctly dimensioned, can limit the self-starting of the pump. These products are entirely made in Stainless steel 316L.

DOCUMENTS ATTACHED

- CE certification
- User Instructions

CERTIFICATIONS

The X PED pressure vessels are made according to the security policy of the standard 2014/68/UE that rules the pressurized products. Under surveillance of the Notified Body, a CE mark is stuck on them as well as the following project data that characterize the product:

- Pressurized fluid: water + air or nitrogen
- Fluid group: 2
- Max operating pressure: see the table chart
- Temperature: -10/+50 °C

WARRANTY

2 years-See general sales conditions and warranty.

PRESSURE	TEMPERATURE
Pmax	Tmax
8 bar	-10 / +50 °C



AUTOCL. X PED OR

INDOOR

Model	Art. Nr.
100	3051051010035
200	3051051010036
300	3051051010037
500	3051051010038
750	3051051010039
1000	3051051010040
1500	3051051010027
2000	3051051010028
3000	3051051010029
4000	3051051010030
5000	3051051010031

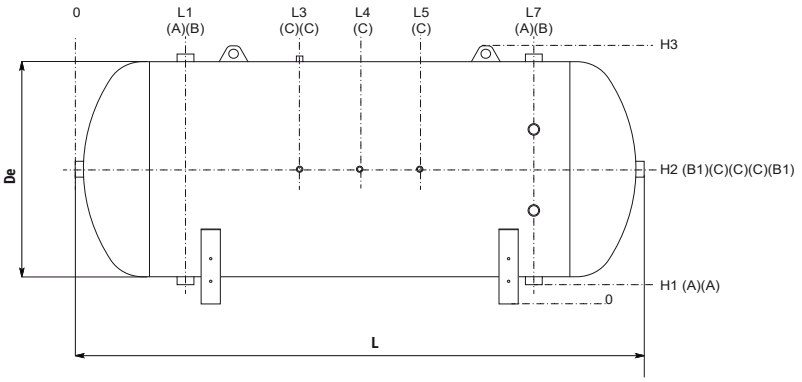

A	Input - use
B	Safety Valve/Instrumentation
B1	Safety Valve/Instrumentation
C	Instrumentation

Model	De	L	L1	L2	L3	L4	L5	L6	L7	H1	H2	H3	B1	A-B	C
	[mm]												Connections F		
100	400	960	240	327	330	480	630	633	720	70	300	530	1" 1/4	1"	1/2"
200	450	1340	244	350	470	670	870	990	1096	75	330	615	1" 1/4	1"	1/2"
300	550	1400	300	380	500	700	900	1020	1100	120	430	765	1" 1/4	1" 1/4	1/2"
500	650	1700	320	405	650	850	1050	1295	1380	115	480	880	1" 1/4	1" 1/2	1/2"
750	750	2000	350	500	750	1000	1250	1500	1650	122	530	962	1" 1/4	2"	1/2"
1000	750	2500	350	500	1000	1250	1500	2000	2150	122	530	962	1" 1/4	2"	1/2"
1500	1000	2180	440	590	840	1090	1340	1590	1740	117	630	1200	1" 1/4	2"	1/2"
2000	1000	2660	440	580	1080	1330	1580	2080	2220	117	630	1200	1" 1/4	2"	1/2"
3000	1200	2800	560	700	1100	1400	1700	2100	2240	140	784	1480	1" 1/4	3"	1/2"
4000	1450	2930	615	765	1115	1465	1815	2165	2315	130	890	1690	1" 1/4	3"	1/2"
5000	1450	3430	615	790	1315	1715	2115	2640	2815	130	890	1690	1" 1/4	3"	1/2"

STORAGE TANK **GALVANIZED Z SC VT**

VERTICAL GALVANIZED PRESSURIZED WATER STORAGE TANK



APPLICATION AND TECHNICAL DESCRIPTION
Cold water storage for pressurized water supply systems.
The SERB. Z SC Pressurized Water Accumulators are specifically designed for water supply systems requiring the storage of cold water under pressure.
They are not suitable for use as lifting tanks.

INSULATION (ON REQUEST)
Insulated version with 20 mm Elastolen insulation, anti-condensation.

MATERIAL
Galvanized mild steel.

WARRANTY
2 years-See general sales conditions and warranty.

PRESSURE	TEMPERATURE
Pmax	Tmax
6 bar	0 / +50 °C

PROMPT AVAILABILITY



SERB. Z SC VT

INDOOR

Installation type	Model	Art. Nr.
	50	3251161990001
	100	3251161990002
	200	3251161990003
	300	3251161990004
	500	3251161990005
	750	3251161990006
	1000	3251161990007
	1500	3251161990008
	2000	3251161990009
Quantities (12pcs)	100	3251161990032

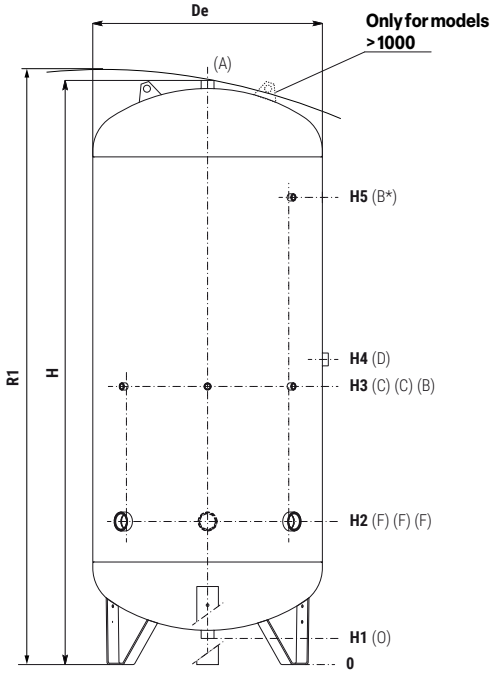

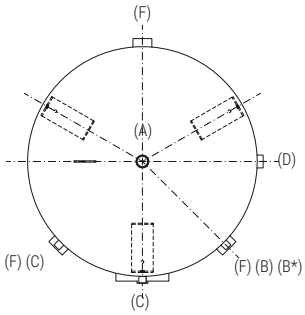

A	Safety valve
B	Visual level indicator / Instrumentation 1/2" (For model 50)
B*	Visual level indicator (for models > 50)
C	Instrumentation 1/2"
D	Level switch – Pressure switch (for models > 50)
F	Input - use (for models > 50)
O	Drain

Model	De	H	R1	H1	H2	H3	H4	H5	A-O	F	B*	D
	[mm]								Connections F			
50	400	602	635	82	237	327	-	-	1"	-	-	-
100	400	1007	1020	73	327	477	567	752	1"1/4	1"	1/2"	1"1/4
200	450	1407	1420	68	337	537	737	1137	1"1/4	1"	1/2"	1"1/4
300	550	1519	1530	129	424	724	824	1224	1"1/4	1"1/4	1/2"	1"1/4
500	650	1811	1825	121	441	841	941	1491	1"1/4	1"1/2	1/2"	1"1/4
750	750	2108	2125	108	508	958	1058	1708	1"1/4	1"1/2	1/2"	1"1/4
1000	850	2162	2180	96	529	979	1079	1729	1"1/2	1"1/2	1/2"	1"1/4
1500	950	2473	2495	113	568	1068	1168	2018	2"	2"	1/2"	1"1/4
2000	1100	2544	2570	95	594	1094	1194	2044	2"	2"	1/2"	1"1/4

Products designed and manufactured for using within temperature and pressure limits in accordance to Art. 4.3 Directive 2014/68/EU (P.E.D.)

STORAGE TANK **GALVANIZED Z SC OR**

HORIZONTAL GALVANIZED PRESSURIZED WATER STORAGE TANK

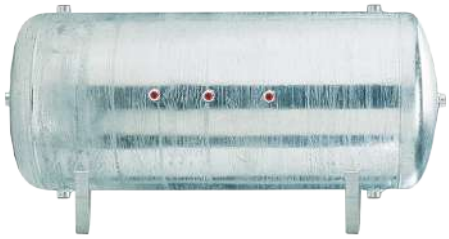

APPLICATION AND TECHNICAL DESCRIPTION

Cold water storage for pressurized water supply systems.
The SERB. Z SC Pressurized Water Accumulators are specifically designed for water supply systems requiring the storage of cold water under pressure.
They are not suitable for use as lifting tanks.

INSULATION (ON REQUEST)

Insulated version with 20 mm Elastolen insulation, anti-condensation.

MATERIAL

Galvanized mild steel.

WARRANTY

2 years-See general sales conditions and warranty.

PRESSURE	TEMPERATURE
Pmax	Tmax
6 bar	0 / +50 °C



SERB. Z SC OR

Installation type: INDOOR

Model	Art. Nr.
100	3251160990001
200	3251160990002
300	3251160990003
500	3251160990004
750	3251160990005
1000	3251160990006
1500	3251160990007
2000	3251160990008

A	Input - use
B-B1	Safety valve /Instrumentation.
C	Instrumentation

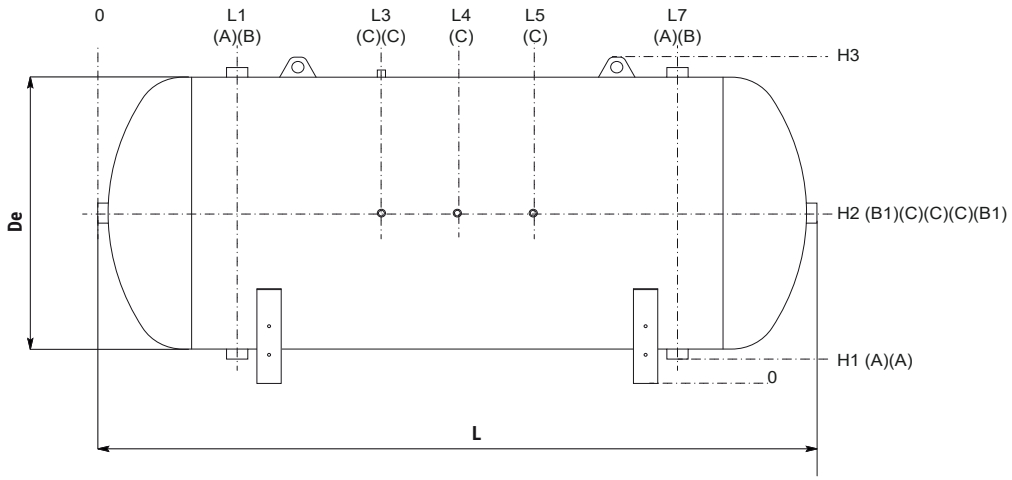

Model	De	L	L1	L2	L3	L4	L5	L6	L7	H1	H2	H3	B1	A-B	C
	[mm]												Connections F		
100	400	955	230	300	338	478	618	655	725	69	294	518	1" 1/4	1"	1/2"
200	450	1350	240	340	475	675	875	1010	1110	67	317	568	1" 1/4	1"	1/2"
300	550	1399	285	370	500	700	900	1030	1115	119	424	762	1" 1/4	1" 1/4	1/2"
500	650	1700	325	420	650	850	1050	1280	1375	115	470	870	1" 1/4	1" 1/2	1/2"
750	750	2010	355	485	805	1005	1205	1525	1655	108	513	948	1" 1/4	1" 1/2	1/2"
1000	850	2060	380	510	830	1030	1230	1550	1680	102	557	1042	1" 1/2	1" 1/2	1/2"
1500	950	2368	460	565	935	1185	1435	1805	1910	85	595	1140	2"	2"	1/2"
2000	1100	2450	500	590	975	1225	1475	1860	1950	72	657	1277	2"	2"	1/2"

Products designed and manufactured for using within temperature and pressure limits in accordance to Art. 4.3 Directive 2014/68/EU (P.E.D.)

STORAGE TANK **STAINLESS STEEL X SC VT**

VERTICAL 304 STAINLESS STEEL PRESSURIZED WATER STORAGE TANK



APPLICATION AND TECHNICAL DESCRIPTION

Cold water storage for pressurized water supply systems.
The SERB. X SC VT Pressurized Water Accumulators are specifically designed for water supply systems requiring the storage of cold water under pressure.
They are not suitable for use as lifting tanks.

MATERIAL

AISI 304 stainless steel

WARRANTY

2 years-See general sales conditions and warranty.

PRESSURE	TEMPERATURE
Pmax	Tmax
6 bar	0 / +50 °C



SERB. X SC VT

INDOOR

Model	Art. Nr.
100	3251012010001
200	3251012010002
300	3251012010003
500	3251012010004
1000	3251012010006
1500	3251012010007
2000	3251012010008
2500	3251012010009
3000	3251012010010
4000	3251012010011
5000ø1600	3251012010013

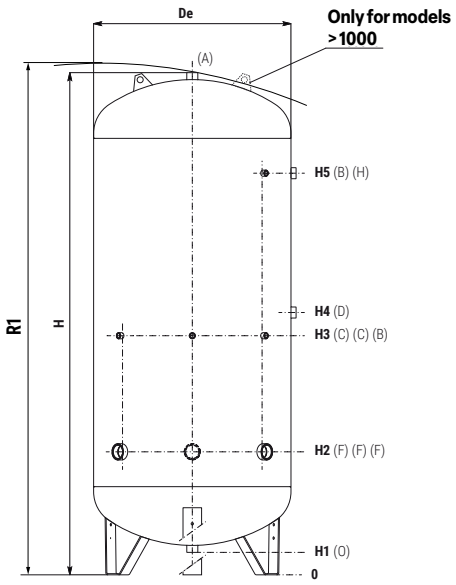

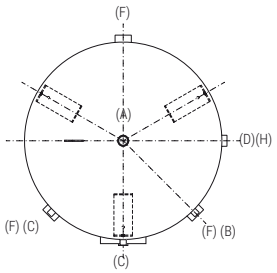

A	Safety valve
B	Instrumentation/Visual level indicator
C	Instrumentation
D	Level switch – Pressure switch
F	Input - use
H	Level switch – Pressure switch
O	Drain

Model	De	H	R1	H1	H2	H3	H4	H5	A-D-O	F	B-C	H
	[mm]								Connections F			
100	400	1026	1040	82	341	491	581	766	1"1/4	1"	1/2"	-
200	450	1417	1430	77	347	547	747	1147	1"1/4	1"	1/2"	-
300	550	1529	1545	139	434	734	834	1234	1"1/4	1"1/4	1/2"	-
500	650	1821	1835	131	451	851	951	1501	1"1/4	1"1/2	1/2"	-
1000	850	2163	2180	97	530	1030	1130	1730	1"1/4	2"	1/2"	1"
1500	1000	2260	2285	100	580	1040	1180	1780	1"1/4	2"	1/2"	1"
2000	1000	2760	2780	100	580	1080	1430	2280	1"1/4	2"	1/2"	1"
2500	1200	2628	2655	118	648	1198	1373	2098	1"1/4	3"	1/2"	1"
3000	1250	2875	2905	116	645	1295	1395	2345	1"1/4	3"	1/2"	1"
4000	1450	2970	3005	90	710	1330	1530	2380	1"1/4	3"	1/2"	1"
5000 ø1600	1600	3005	3045	69	717	1337	1537	2387	1"1/4	3"	1/2"	1"

Products designed and manufactured for using within temperature and pressure limits in accordance to Art. 4.3 Directive 2014/68/EU (P.E.D.)

EXAMPLE OF INSTALLATION WITH AIR SUPPLY SYSTEM AND **AUTOCLAVE PED**

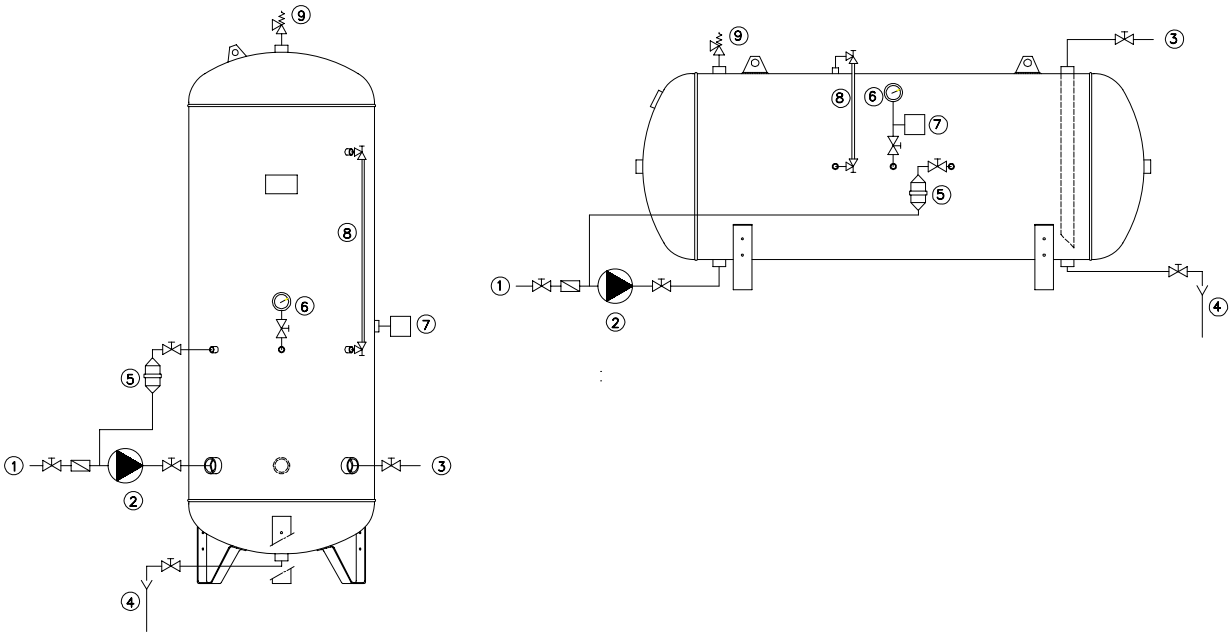

01	Suction	04	Drain	07	Pressure switch
02	Pump unit(s)	05	Air supply unit	08	Level indicator
03	Outlet to users	06	Pressure gauge	09	Safety valve

EXAMPLE OF INSTALLATION WITH COMPRESSOR AND **AUTOCLAVE PED**

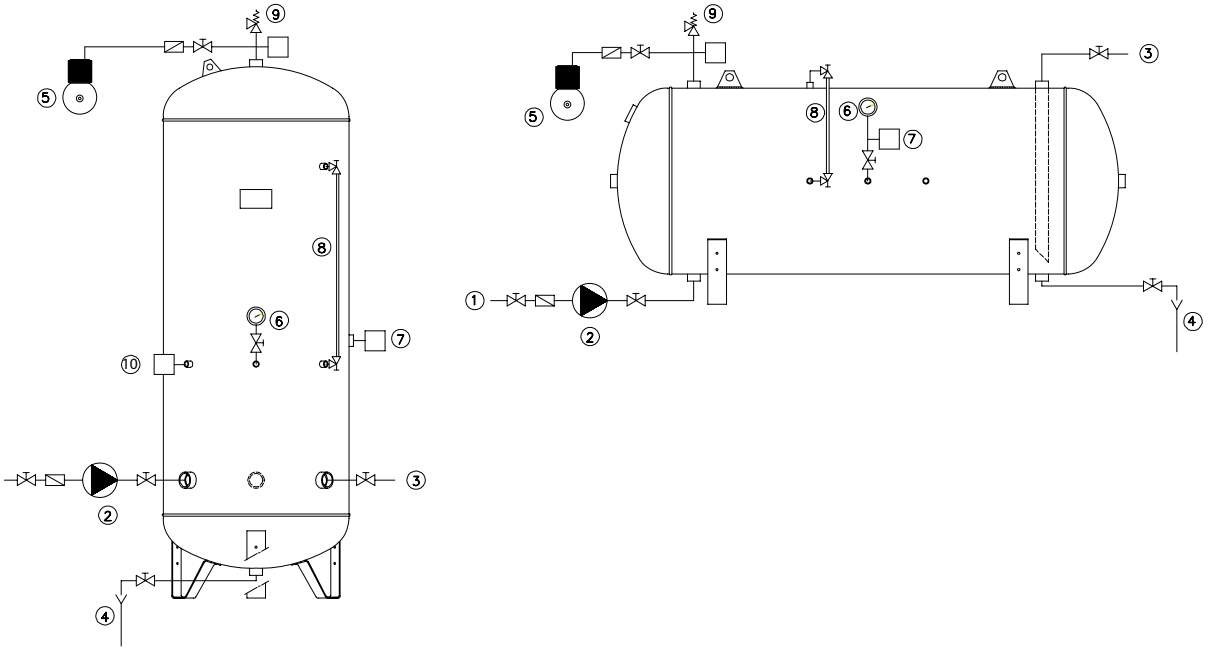

01	Suction	04	Drain	07	Pressure switch	10	Pump level switch
02	Pump unit(s)	05	Compressor	08	Visual level indicator	11	Safety level switch
03	Outlet to users	06	Pressure gauge	09	Safety valve		

The following schemes are purely illustrative. To realize the installation, always refer to a qualified technician.

EXPANSION VESSELS-MEMBRANE **PAINTED PED VT**

VERTICAL PAINTED EXPANSION VESSEL WITH MEMBRANE (DIRECTIVE 2014/68/UE)



TECHNICAL DESCRIPTION

V PED expansion vessels with membrane are used for lifted water systems and they represent a pressurised water lung that, if duly dimensioned, reduces pump cycling.
The peculiarity of this product is the physic separation between water and air made by the membrane.

APPLICATION

Perfect to ensure water deliveries to the top floors of the building or to work in case of insufficient water supplied by waterworks, or to stabilize pressure in the domestic water supply by absorbing expansion when the water is heated.

MATERIAL

Painted mild steel.

MEMBRANE

Elastic EPDM membrane suitable for drinking water.

CERTIFICATIONS

V PED expansion vessels with membrane are produced in accordance with safety disposal of European Directive 2014/68/UE in terms of pressurized devices.
They are CE labelled with design data:
- pressurized fluid: water+air or nitrogen
- Fluid group: 2
- max. working pressure: 10bar

DOCUMENTS ATTACHED

• CE certification
• User Instructions

CE PROMPT AVAILABILITY



VASO MEMB. V PED VT

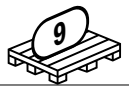

Installation type	Model	Art. Nr.
INDOOR	50	3911162241007
	80	3911162241008
	100	3911162241003
	200	3911162241004
	300	3911162241011
	500	3911162241012
Quantities (9 pcs)	50	391116224100709

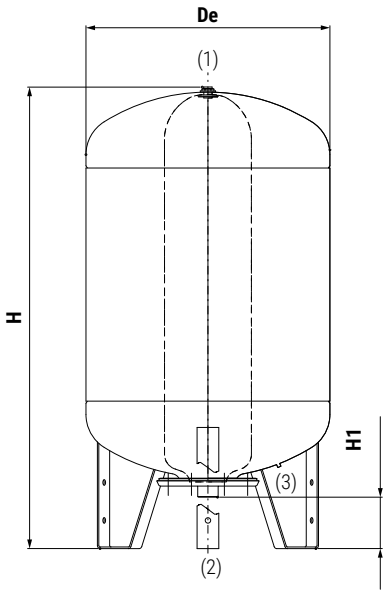

Model	De	H	H1	1	2		3	WORKING CONDITIONS Temp. min/max	Press. max
	[mm]			Connections G				[°C]	[bar]
50	400	627	91	Air inlet valve	1" M	Water in/out	-	-10/+99	10
80	450	717	88		1" M		-	-10/+99	10
100	450	872	88	1/2" Instrumentation	1" M		Air inlet valve	-10/+99	10
200	550	1187	151	1/2"	G 1" 1/4 F			-10/+99	10

Model	De	H	H1	1	2	3	Used as air cushion pressure vessel Temp. min/max	Press. max	Used as expansion vessel Temp. min/max	Press. max
	[mm]			Connections G			[°C]	[bar]	[°C]	[bar]
300	650	1254	150	1/2" Instrumentation	G 1" 1/4 F	Water in/out Air inlet valve	-10/+50	10	-10/+99	10
500	750	1511	144		G 1" 1/4 F		-10/+50	10	-10/+99	10

EXPANSION VESSEL-MEMBRANE **PAINTED PED 24 LT**

PAINTED EXPANSION VESSEL WITH MEMBRANE (DIRECTIVE 2014/68/UE)



CE

PRESSURE	TEMPERATURE
Pmax	Tmax
8 bar	-10/+99 °C



VASO MEMB. V PED 24 LT (36 unit box)

Model	36 UNIT BOX Art. Nr.
24	390119061000136

Model	**VASO MEMB. V PED 24 LT** Art. Nr.
24	3901190610001

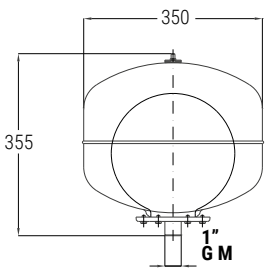

EXPANSION VESSELS-MEMBRANE **PAINTED PED OR**

HORIZONTAL PAINTED EXPANSION VESSEL WITH MEMBRANE (DIRECTIVE 2014/68/UE)



TECHNICAL DESCRIPTION

V PED expansion vessels with membrane are used for lifted water systems and they represent a pressurised water lung that, if duly dimensioned, reduces pump cycling.
The peculiarity of this product is the physic separation between water and air made by the membrane.

APPLICATION

Perfect to ensure water deliveries to the top floors of the building or to work in case of insufficient water supplied by waterworks, or to stabilize pressure in the domestic water supply by absorbing expansion when the water is heated.

MATERIAL

Painted mild steel.

MEMBRANE

Elastic EPDM membrane suitable for drinking water.

CERTIFICATIONS

V PED expansion vessels with membrane are produced in accordance with safety disposal of European Directive 2014/68/UE in terms of pressurized devices.
They are CE labelled with design data:
- pressurized fluid: water+air or nitrogen
- Fluid group: 2
- max. working pressure: 10bar

DOCUMENTS ATTACHED

- CE certification
- User Instructions

PROMPT AVAILABILITY



VASO MEMB. V PED OR



INDOOR

Installation type	Model	Art. Nr.
	50	3911161341007
	80	3911161341008
	100	3911161341003
	200	3911161341004
	300	3911161341011
	500	3911161341012

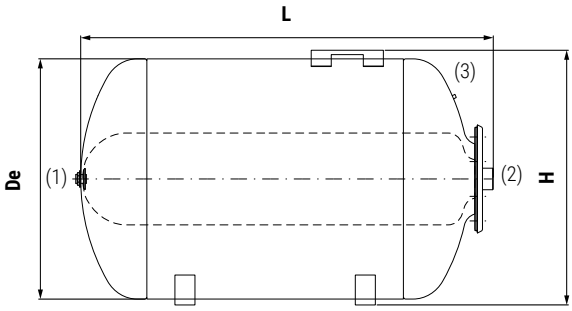

Model	De	H	L	1		2		3	WORKING CONDITIONS Temp. min/max	Press. max
	[mm]			Connections G					[°C]	[bar]
50	400	424	583	Air inlet valve		1" M	Water in/out	-	-10/+99	10
80	450	473	598			1" M		-	-10/+99	10
100	450	473	783	1/2"	Instrumentation	1" M		Air inlet valve	-10/+99	10
200	550	583	1066	1/2"		G1" 1/4 F			-10/+99	10

Model	De	H	L	1		2		3	Used as air cushion pressure vessel Temp. min/max	Press. max	Used as expansion vessel Temp. min/max	Press. max
	[mm]			Connections G					[°C]	[bar]	[°C]	[bar]
300	650	807	1080	1/2" Instrumentation		G1" 1/4 F	Water in/out	Air inlet valve	-10/+50	10	-10/+99	10
500	750	900	1350			G1" 1/4 F			-10/+50	10	-10/+99	10

MOTOR SUPPORT PLATE

MOTOR SUPPORT PLATE 50/80/100/200

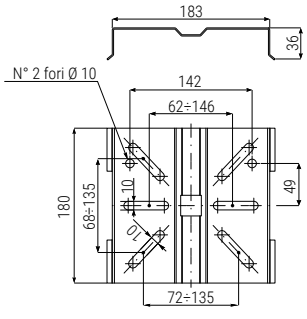

MOTOR SUPPORT PLATE 300/500

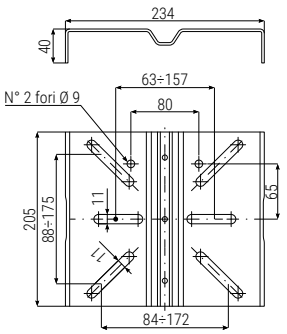

PRESSURIZED WATER AND COMPRESSED AIR

CORDIVARI

EXPANSION VESSELS-MEMBRANE **GALVANIZED PED VT**

VERTICAL GALVANIZED EXPANSION VESSEL WITH MEMBRANE (DIRECTIVE 2014/68/UE)



TECHNICAL DESCRIPTION

Z PED expansion vessels with membrane are used for lifted water systems and they represent a pressurised water lung that, if duly dimensioned, reduces pump cycling.
The peculiarity of this product is the physic separation between water and air made by the membrane.

APPLICATION

Perfect to ensure water deliveries to the top floors of the building or to work in case of insufficient water supplied by waterworks, or to stabilize pressure in the domestic water supply by absorbing expansion when the water is heated.

MATERIAL

Galvanized mild steel.

MEMBRANE

Elastic EPDM membrane suitable for drinking water.

CERTIFICATIONS

Z PED expansion vessels with membrane are produced in accordance with safety disposal of European Directive 2014/68/UE in terms of pressurized devices.
They are CE labelled with design data:
- pressurized fluid: water+air or nitrogen
- Fluid group: 2
- max. working pressure: 10bar

DOCUMENTS ATTACHED

• CE certification
• User Instructions

PROMPT AVAILABILITY



VASO MEMB. Z PED VT



Installation type	Model	Art. Nr.
INDOOR	50	3911161991007
	80	3911161991008
	100	3911161991003
	200	3911161991004
	300	3911161991011
	500	3911161991012
Quantities (9 pcs)	50	391116199100709

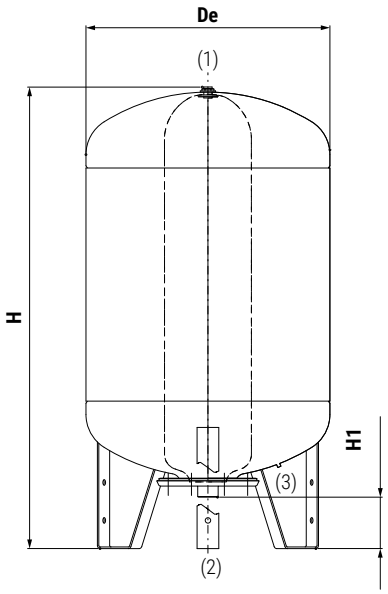

Model	De	H	H1	1	2		3	WORKING CONDITIONS Temp. min/max	Press. max
	[mm]			Connections G				[°C]	[bar]
50	400	627	91	Air inlet valve	1" M	Water in/out	-	-10/+99	10
80	450	717	88		1" M		-	-10/+99	10
100	450	872	88	1/2" Instrumentation	1" M		Air inlet valve	-10/+99	10
200	550	1187	151	1/2"	G 1" 1/4 F			-10/+99	10

Model	De	H	H1	1	2	3	Used as air cushion pressure vessel Temp. min/max	Press. max	Used as expansion vessel Temp. min/max	Press. max
	[mm]			Connections G			[°C]	[bar]	[°C]	[bar]
300	650	1254	150	1/2" Instrumentation	G 1" 1/4 F	Water in/out Air inlet valve	-10/+50	10	-10/+99	10
500	750	1511	144		G 1" 1/4 F		-10/+50	10	-10/+99	10

EXPANSION VESSEL-MEMBRANE **GALVANIZED PED 24 LT**

GALVANIZED EXPANSION VESSEL WITH MEMBRANE (DIRECTIVE 2014/68/UE)



PRESSURE	TEMPERATURE
Pmax	Tmax
8 bar	-10/+99 °C

VASO MEMB. Z PED 24 LT (36 unit box)



Model	36 UNIT BOX
	Art. Nr.
24	390119060000136

Model	**VASO MEMB. Z PED 24 LT**
	Art. Nr.
24	3901190600001

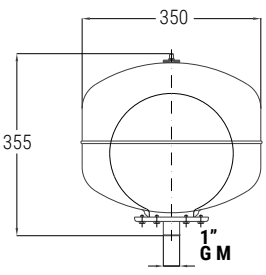

EXPANSION VESSELS-MEMBRANE **GALVANIZED PED OR**

HORIZONTAL GALVANIZED EXPANSION VESSEL WITH MEMBRANE (DIRECTIVE 2014/68/UE)



TECHNICAL DESCRIPTION

Z PED expansion vessels with membrane are used for lifted water systems and they represent a pressurised water lung that, if duly dimensioned, reduces pump cycling.
The peculiarity of this product is the physic separation between water and air made by the membrane.

APPLICATION

Perfect to ensure water deliveries to the top floors of the building or to work in case of insufficient water supplied by waterworks, or to stabilize pressure in the domestic water supply by absorbing expansion when the water is heated.

MATERIAL

Galvanized mild steel.

MEMBRANE

Elastic EPDM membrane suitable for drinking water.

CERTIFICATIONS

Z PED expansion vessels with membrane are produced in accordance with safety disposal of European Directive 2014/68/UE in terms of pressurized devices.
They are CE labelled with design data:
- pressurized fluid: water+air or nitrogen
- Fluid group: 2
- max. working pressure: 10bar

DOCUMENTS ATTACHED

• CE certification
• User Instructions

CE PROMPT AVAILABILITY



VASO MEMB. V PED OR

Installation type: INDOOR

Model	Art. Nr.
50	3911160991007
80	3911160991008
100	3911160991003
200	3911160991004
300	3911160991011
500	3911160991012

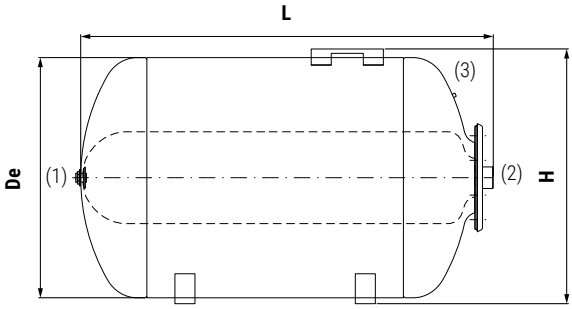

Model	De	H	L	1		2		3	WORKING CONDITIONS Temp. min/max	Press. max
	[mm]			Connections G					[°C]	[bar]
50	400	424	583	Air inlet valve		1" M	Water in/out	-	-10/+99	10
80	450	473	598			1" M		-	-10/+99	10
100	450	473	783	1/2"	Instrumentation	1" M		Air inlet valve	-10/+99	10
200	550	583	1066	1/2"		G1" 1/4 F			-10/+99	10

Model	De	H	L	1		2		3	Used as air cushion pressure vessel Temp. min/max	Press. max	Used as expansion vessel Temp. min/max	Press. max
	[mm]			Connections G					[°C]	[bar]	[°C]	[bar]
300	650	807	1080	1/2" Instrumentation		G1" 1/4 F	Water in/out	Air inlet valve	-10/+50	10	-10/+99	10
500	750	900	1350			G1" 1/4 F			-10/+50	10	-10/+99	10

MOTOR SUPPORT PLATE

MOTOR SUPPORT PLATE 50/80/100/200

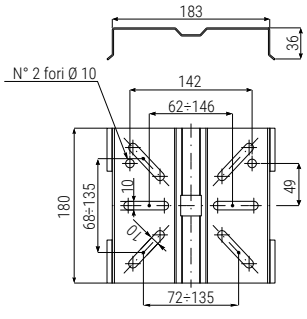

MOTOR SUPPORT PLATE 300/500

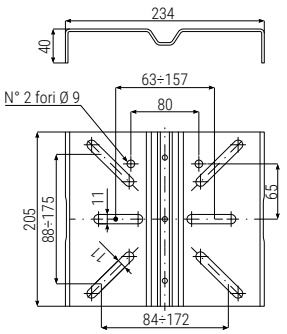

PRESSURIZED WATER AND COMPRESSED AIR

CORDIVARI

COMPRESSED AIR RECEIVERS **P.E.D.**

TESTED PRESSURIZED TANKS FOR COMPRESSED AIR
CE marked storage tanks for pressurized air in compliance with Directive 2014/68/UE P.E.D.
The range of tested pressurized tanks PED includes all the pressurized storages designed for accumulation of compressed air.
These products are manufactured according the European Directive for pressurized devices (2014/68/UE Pressure Equipment Device) and are designed to contain fluids at high pressure and/or temperature.





SIMPLE PRESSURE VESSEL DIRECTIVE (SPVD)
The SPVD Directive applies to pressure vessels for air or nitrogen made of steel or aluminium alloy, with a maximum working pressure higher than 0.5 bar and less than 30 bar and with the product of the maximum working pressure and the capacity of the vessel (PS x V) between 50 bar*l and 10,000 bar*l and with an operating temperaturebetween -50 °C and +300 °C for steel and max. 100 °C for aluminium.



THE PRESSURE EQUIPMENT DEVICE (P.E.D.) DIRECTIVE
Any device that overcomes the maximum working pressure limit of **0,5 BAR** is subject to design and manufacture indications according to the directive 2014/68/EU.

This directive establishes an index of hazardousness of the equipment (tanks in our case), determined according to the type of fluid contained, the maximum temperature admissible, the pressure and the capacity of the tank.

Fluids are categorized in 2 groups:
- **GROUP 1**, hazardous fluids (explosive, flammable, easily flammable, highly flammable, oxidizer, toxic and highly toxic)
- **GROUP 2**, not hazardous fluids (all fluids that are not included in **GROUP 1**)

Note: all the Cordivari products involved in the application of the **PED** directive are intended to contain fluids belonging to GROUP 2 (water, steam, compressed air).
The categorization of the equipment in accordance with the level of hazardousness is established in the Annex II of the directive that defines six classes:

Category	Application of the PED directive	CE Marking	Reference
PS ≤ 0,5 and specific exceptions	Not applicable	No	Art. 1.1 e 1.2
PS ≥ 0,5 in conditions of low hazard level	Applicable	No	Art. 4.3
Category I	Applicable	Sì	Table from 1 to 9 Annex II
Category II	Applicable	Sì	
Category III	Applicable	Sì	
Category IV	Applicable	Sì	

USE OF PRESSURE EQUIPMENT ACCORDING TO ITALIAN LAWS AND REGULATIONS
The use of pressure equipment is regulated in Italy by Ministerial Decree No. 329/2004.
This decree establishes requirements for the correct operation of pressure equipments both during installation and start-up and in terms of subsequent periodic checks. On this regard, following activities are defined:

- **DECLARATION OF COMMISSIONING:** Is intended the declaration to be submitted to National Labour Security Institute and to the competent for the territory Sanitary Office, containing the following annexes according to the provisions of art. 6.1 of Ministerial Decree no. 329/2004.
- **FIRST INSTALLATION COMMISSIONING:** control consisting in verifying by competent approved body (Labour or Medical Institute) that the tank has been correctly installed in compliance with user manual and maintenance issued by the manufacturer of the equipment and in compliance with the local laws in force.
- **PERIODICAL RE-QUALIFICATION:** compulsory periodic checks to be carried out by authorised bodies on pressure equipments in service under responisibility of user, in order to check the compliance for a continuous operation.
- **OPERATION CHECK:** performed to assess the compliance of the actual conditions of use of the equipment with what is reported in the declaration of commissioning and in manual. During this phase, the safety accessories are also subjected to a functional check.
- **INTEGRITY CHECK:** this is carried out through a visual examination both inside and outside the pressure equipment and through instrumental checks that determine whether the equipment is still within the limits set by the manufacturer, e.g. by checking the thickness.

DECREE 329 states exclusions cases (total or partial) from the operational checks, according to following scheme.

CAPACITY V [liters]	MAXIMUM OPERATING PRESSURE PS [bar]	PS x V [bar x liter]	POTENTIAL CORROSION INTERNAL OR EXTERNAL (*)	DECLARATION OF COMMISSIONING	COMMISSIONING CHECK	PERIODIC REQUALIFICATION
≤ 25	whatever	-	-	NO	NO	NO (**)
25 < V ≤ 50	≤ 12	-	-	NO	NO	
> 50	≤ 12	≤ 8000	NO	YES	NO	
	≤ 12	≤ 8000	YES	YES	NO	YES (***)
	≤ 12	≤ 12000	NO	YES	YES	NO (**)

(*) The absence of corrosive phenomena inside or outside the equipments can be declared by the designer in the declaration of commissioning only for fluid under Group 2 , except steam.

(**) The user must always follow the instructions in the operating and maintenance manual.

(***) Always to be carried out by an approved body.
Categories I and II Functional check Four-yearly - Integrity check Ten-yearly
Categories III and IV Operation check Every four years - Integrity check: Every ten years

COMPRESSED AIR RECEIVERS **SPVS**

COMPRESSED AIR / NITROGEN RECEIVERS (DIRECTIVE 2014/29/CE)



TECHNICAL DESCRIPTION

Compressed air receivers allows to extract more air than the quantity produced by compressor, this without causing an under-pressure in the unit.

Built in mild steel, either painted, galvanized and painted with internal Polywarm® coating (Attestation ACS - EN 16421).

APPLICATION

Storage and distribution of compressed air.

Material

- Painted mild steel (standard colour RAL 5002-Blue). Other colours on demand: RAL 5015 - Light Blue / RAL 3000 - Red / RAL 1021 - Yellow
- Galvanized mild steel.
- Painted mild steel version with internal Polywarm® coating.

DOCUMENTS ATTACHED

- CE certification - User Instructions

CERTIFICATIONS

Compressed air receivers are produced according to European Directive 2014/29/CE for items with a "volume x pressure" minor than 10.000 Bar x liter. These tanks are marked CE under the monitoring of an external control agency.

- Liquid in pressure: air
- Liquid group: 2
- Maximum working pressure: (See tab)
- Temperature: -10/+100°C

WORKING TEMPERATURE
Tmax
-10/+100 °C

PROMPT AVAILABILITY

CE

			GALVANIZED	PAINTED - *RAL 5002 BLUE (*)*
		Pressure [Bar]	Model	Art. Nr.	Art. Nr.
	**VERTICAL COMPRESSED AIR RECEIVER SPVS 2014/29/CE**	11	**100**	3053171990001	3053172240001
			200	3053171990022	3053172240022
			270	3053171990003	3053172240003
			500	3053171990004	3053172240004
			710	3053171990025	3053172240025
			900	3053171990026	3053172240026



(*) Other colours on demand:
RAL 5015 Light Blue
RAL 3000 Red
RAL 1021 Yellow

			POLYWARM®
		Pressure [Bar]	Model	PAINTED RAL 5002 BLUE (*) FOOD INTERNAL COATING (POLYWARM®)
	**VERTICAL COMPRESSED AIR RECEIVER SPVS 2014/29/CE** VERNICIATO RAL 5002 BLU (*) - FOOD INTERNAL COATING (POLYWARM®)	11	**100**	*on request*
			200	
			270	
			500	
			710	
			900	



(*) Other colours on demand:
RAL 5015 Light Blue
RAL 3000 Red
RAL 1021 Yellow

COMPRESSED AIR RECEIVERS **SPVS**

COMPRESSED AIR / NITROGEN RECEIVERS (DIRECTIVE 2014/29/CE)

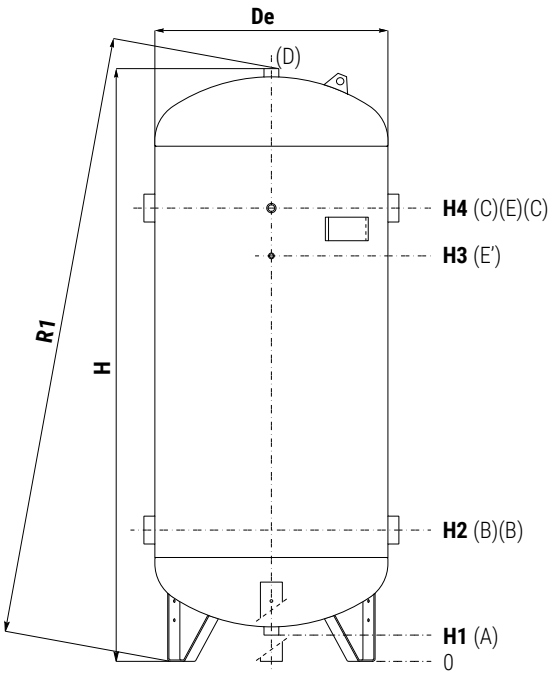

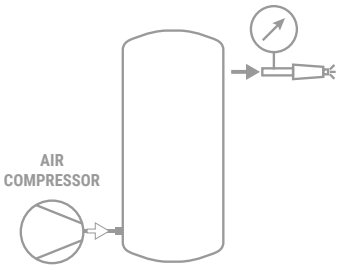

A	Drain
B	Air inlet
C	Air outlet
D	Safety valve
E-E'	Instrumentation

Model	Working Pressure	De	H	R1	H1	H2	H3	H4	A-D	B-C	E	E'
	[bar]				[mm]						Connections F	
100	**11**	400	1105	1125	145	380	790	870	2"	1"	3/8"	3/8"
200		450	1470	1490	145	385	1125	1225	2"	1"	3/8"	3/8"
270		500	1760	1780	150	410	1330	1450	2"	1"	3/8"	3/8"
500		650	1850	1870	170	485	1285	1485	2"	2"	3/8"	3/4"
710		790	1900	1930	135	585	1360	1460	2"	2"	3/8"	3/4"
900		790	2130	2160	145	490	1390	1590	2"	2"	3/8"	3/4"

EXAMPLE OF INSTALLATION

In compressed air production and distribution systems, tanks are used in production plants for the following functions:
- to store compressed air in order to use it when needed
- to ensure network air flow and constant pressure by limiting interventions to adjust the flow;
- to favour the separation of condensation through the release of the flow coming from the compressor in the bottom of the tank and connecting delivery in the upper.

Furthermore, the tanks are located near uses characterised by highly variable air requirements in order to limit pressure fluctuations along the distribution lines.
Optimum tank volume in a production system depends on the type of compressor, environmental conditions of operation and type of use.

In systems characterised by max operating pressure of 10 bar and flow rates from 1 to 100 Nm^3/min, tank capacity is calculated, as a first approximation, with the following relationship:
V= 0.2 to 0.6 Q
V = theoretical volume of the tank in m^3
Q = intake flow rate from the compressor in m^3/min
0.2 = coefficient for large plants
0.6 = coefficient for small plants

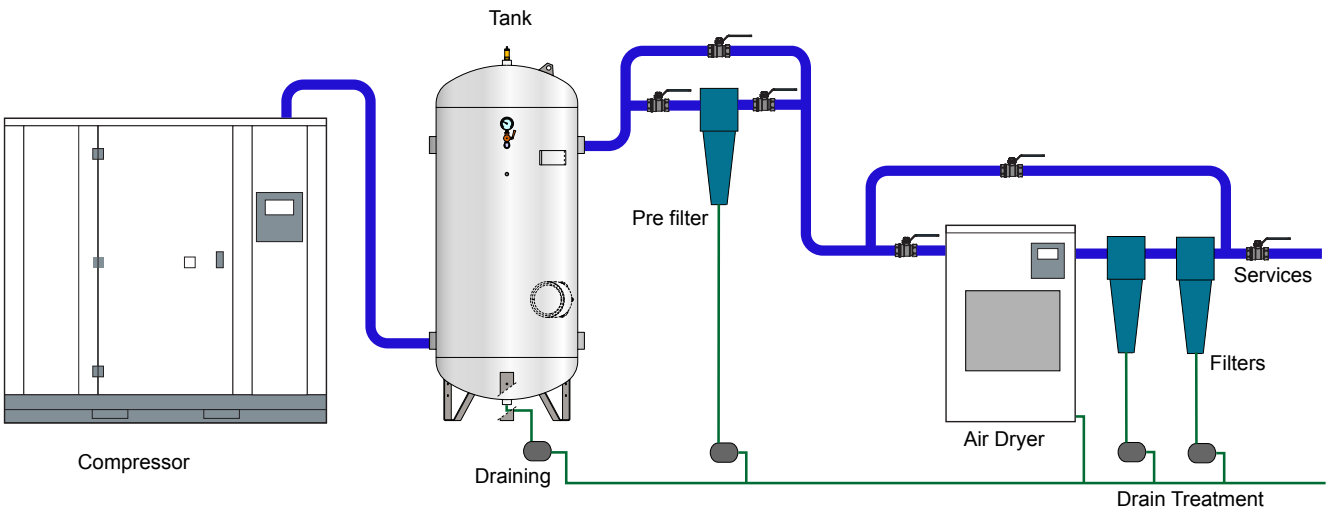

The following schemes are purely illustrative. To realize the installation, always refer to a qualified technician.

COMPRESSED AIR RECEIVERS **P.E.D. VT**

COMPRESSED AIR / NITROGEN RECEIVERS (DIRECTIVE 2014/68/UE - P.E.D.)



TECHNICAL DESCRIPTION

Compressed air receivers allows to extract more air than the quantity produced by compressor, this without causing an under-pressure in the unit.

Built in mild steel, either painted, galvanized and painted with internal Polywarm® coating (Attestation ACS - EN 16421).

APPLICATION

Storage and distribution of compressed air.

MATERIAL

- Painted mild steel (standard colour RAL 5002-Blue). Other colours on demand: RAL 5015 - Light Blue / RAL 3000 - Red / RAL 1021 - Yellow
- Galvanized mild steel.
- Painted mild steel version with internal Polywarm® coating.

DOCUMENTS ATTACHED

- CE certification - User Instructions

CERTIFICATIONS

Compressed air receivers are produced according to European Directive 2014/29/CE for items with a "volume x pressure" minor than 10.000 Bar x liter. These tanks are marked CE under the monitoring of an external control agency.

- Liquid in pressure: air
- Liquid group: 2
- Maximum working pressure: (See tab)
- Temperature: -10/+100°C

WORKING TEMPERATURE
Tmax
-10/+100 °C

CE



VERTICAL COMPRESSED AIR RECEIVER 2014/68/CE-P.E.D.

Pressure [Bar]	Model	GALVANIZED Art. Nr.	PAINTED - RAL 5002 BLUE (*) Art. Nr.
8	1500	3054171990001	3054172240001
	2000	3054171990002	3054172240002
	3000	3054171990054	3054172240054
	4000	3054171990005	3054172240005
	5000	3054171990006	3054172240006
	8000	3054171990032	/
	10000	3054171990033	/
12	1000	3054171990067	3054172240067
	1500	3054171990011	3054172240011
	2000	3054171990012	3054172240012
	2500	3054171990013	3054172240013
	3000	3054171990064	3054172240064
	4000	3054171990015	3054172240015
	5000	3054171990016	3054172240016
	8000	3054171990030	/
	10000	3054171990031	/
15	1000	3054171990167	3054172240151
	1500	3054171990118	3054172240102
	2000	3054171990168	3054172240152



VERTICAL COMPRESSED AIR RECEIVER - 2014/68/CE-P.E.D.
(WITH MANHOLE)

Pressure [Bar]	Model	GALVANIZED Art. Nr.	PAINTED - RAL 5002 BLUE (*) Art. Nr.
8	1500	3054171990001	3054172240001
	2000	3054171990002	3054172240002
12	1000	3054171990067	3054172240067
	1500	3054171990011	3054172240011



(*) Other colours on demand:
RAL 5015 Light Blue
RAL 3000 Red
RAL 1021 Yellow



VERTICAL COMPRESSED AIR RECEIVER
PAINTED - RAL 5002 BLUE (*) - FOOD INTERNAL COATING (POLYWARM®)

Pressure [Bar]	POLYWARM® PAINTED RAL 5002 BLUE (*) FOOD INTERNAL COATING (POLYWARM®)
8	*(on request)* **from 1500 to 5000**
12	*(on request)* **from 1000 to 5000**
15	*on request*



(*) Other colours on demand:
RAL 5015 Light Blue
RAL 3000 Red
RAL 1021 Yellow

COMPRESSED AIR RECEIVERS **P.E.D. VT**

COMPRESSED AIR / NITROGEN RECEIVERS (DIRECTIVE 2014/68/UE - P.E.D.)

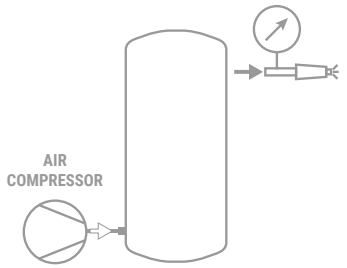

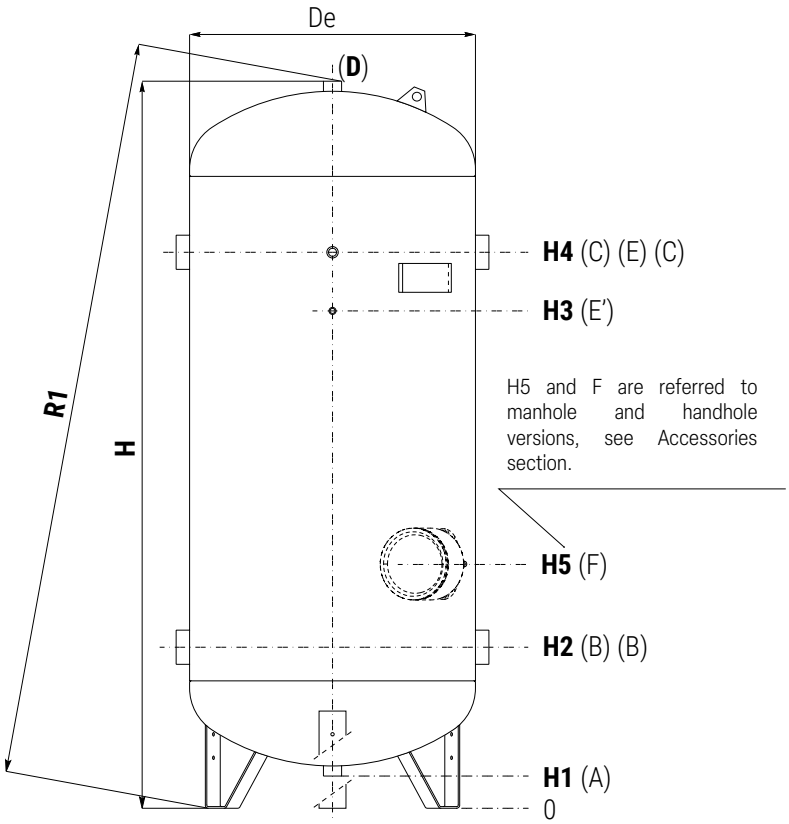

A	Drain
B	Air inlet
C	Air outlet
D	Safety valve
E-E'	Instrumentation
F	Manhole / handhole (on request)

Model	Working Pressure	De	H	R1	H1	H2	H3	H4	H5	A-D	B-C	E	E'
	[bar]	[mm]								Connections F			
1500	8	950	2470	2510	115	520	1480	1680	860	2"	2"	3/8"	3/4"
2000		1100	2545	2600	100	595	1495	1695	890	2"	2"	3/8"	3/4"
3000		1200	2950	3075	140	680	1580	1780	985	2"	3"	3/8"	3/4"
4000		1450	3010	3100	115	710	1610	1810	1010	2"	3"	3/8"	3/4"
5000		1450	3510	3585	115	710	2100	2300	1010	2"	3"	3/8"	3/4"
8000		1650	4200	4280	200	905	3310	3510	1150	2"	4"	3/8"	3/4"
10000		1650	5200	5270	200	905	4310	4510	1150	2"	4"	3/8"	3/4"
1000	12	790	2440	2470	180	575	1625	1825	870	2"	2"	3/8"	3/4"
1500		950	2470	2510	115	520	1480	1680	860	2"	2"	3/8"	3/4"
2000		1100	2545	2600	100	595	1495	1695	890	2"	2"	3/8"	3/4"
2500		1200	2660	2760	140	680	1580	1780	985	2"	3"	3/8"	3/4"
3000		1200	2950	3075	140	680	1580	1780	985	2"	3"	3/8"	3/4"
4000		1450	3010	3100	115	710	1610	1810	1010	2"	3"	3/8"	3/4"
5000		1450	3510	3585	115	710	2100	2300	1010	2"	3"	3/8"	3/4"
8000		1650	4200	4280	200	905	3310	3510	1150	2"	4"	3/8"	3/4"
10000		1650	5200	5270	200	905	4310	4510	1150	2"	4"	3/8"	3/4"
1000	15	790	2440	2470	180	575	1625	1825	870	2"	2"	3/8"	3/4"
1500		950	2470	2510	115	520	1480	1680	860	2"	2"	3/8"	3/4"
2000		1100	2545	2600	100	595	1495	1695	890	2"	2"	3/8"	3/4"

COMPRESSED AIR RECEIVERS **P.E.D. VT 11-15 BAR**

COMPRESSED AIR / NITROGEN RECEIVERS (DIRECTIVE 2014/68/UE - P.E.D.)



TECHNICAL DESCRIPTION

Compressed air receivers allows to extract more air than the quantity produced by compressor, this without causing an under-pressure in the unit.

Built in mild steel, either painted, galvanized and painted with internal Polywarm® coating according to D.M. nr. 174 dated 06/04/2004

APPLICATION

Storage and distribution of compressed air.

MATERIAL

- Painted mild steel (standard colour RAL 5002-Blue). Other colours on demand: RAL 5015 - Light Blue / RAL 3000 - Red / RAL 1021 - Yellow
- Galvanized mild steel.
- Painted mild steel version with internal Polywarm® coating.

DOCUMENTS ATTACHED

- CE certification - User Instructions

CERTIFICATIONS

Compressed air receivers are produced according to European Directive 2014/29/CE for items with a "volume x pressure" minor than 10.000 Bar x liter. These tanks are marked CE under the monitoring of an external control agency.

- Liquid in pressure: air
- Liquid group: 2
- Maximum working pressure: (See tab)
- Temperature: -10/+100°C

WORKING TEMPERATURE
Tmax
-10/+100 °C

CE

		Pressure [Bar]	Model	GALVANIZED Art. Nr.	PAINTED - *RAL 5002 BLUE (*)* Art. Nr.
	**VERTICAL COMPRESSED AIR RECEIVER 2014/68/CE-P.E.D.**	11	100	3053171990101	3053172240110
			200	3053171990102	3053172240111
			270	3053171990103	3053172240112
			500	3053171990104	3053172240113
			710	3053171990105	3053172240114
			900	3053171990106	3053172240115
		15	200	3053171990107	3053172240116
			270	3053171990108	3053172240117
			500	3053171990109	3053172240118



(*) Other colours on demand:
RAL 5015 Light Blue
RAL 3000 Red
RAL 1021 Yellow

		Pressure [Bar]	Model	POLYWARM® PAINTED RAL 5002 BLUE (*) FOOD INTERNAL COATING (POLYWARM®)
	**VERTICAL COMPRESSED AIR RECEIVER 2014/68/CE-P.E.D.**	11	100	*on request*
			200	
			270	
			500	
			710	
			900	
		15	200	*on request*
			270	
			500	



(*) Other colours on demand:
RAL 5015 Light Blue
RAL 3000 Red
RAL 1021 Yellow

COMPRESSED AIR RECEIVERS **P.E.D. VT 11-15 BAR**

COMPRESSED AIR / NITROGEN RECEIVERS (DIRECTIVE 2014/68/UE - P.E.D.)

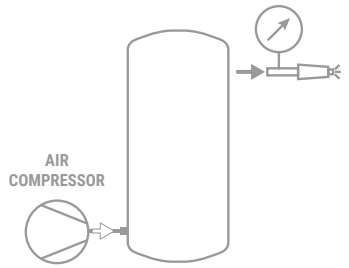

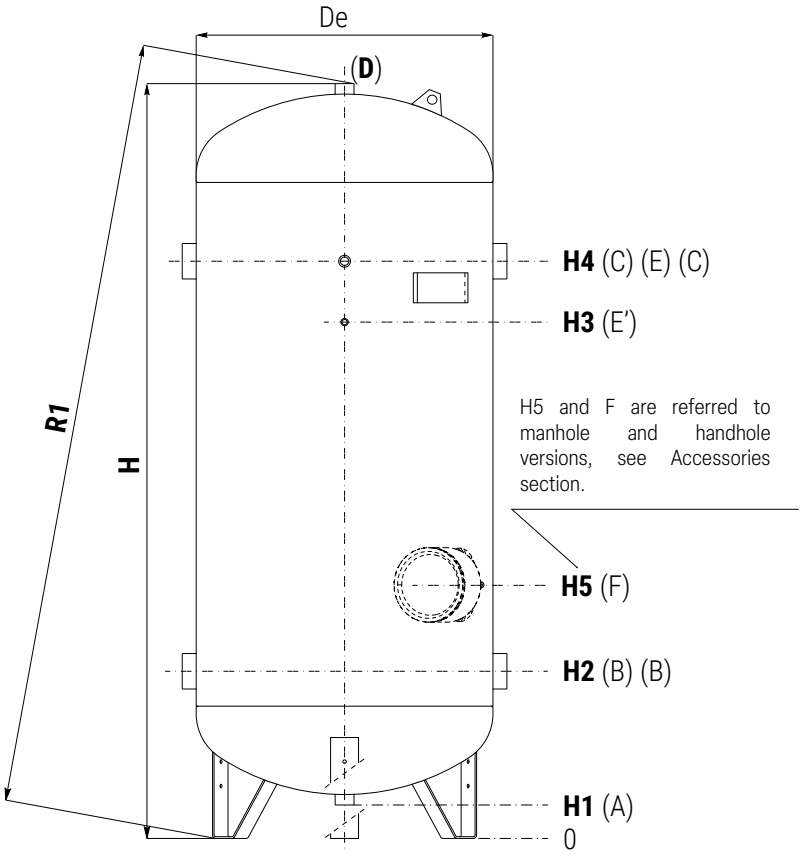

A	Drain
B	Air inlet
C	Air outlet
D	Safety valve
E-E'	Instrumentation
F	Manhole / handhole (on request)

Model	Working Pressure	De	H	R1	H1	H2	H3	H4	A-D	B-C	E	E'
	[bar]				[mm]				Connections F			
100	11	400	1105	1125	145	380	790	870	2"	1"	3/8"	3/8"
200		450	1470	1490	145	385	1125	1225	2"	1"	3/8"	3/8"
270		500	1760	1780	150	410	1330	1450	2"	1"	3/8"	3/8"
500		650	1850	1870	170	485	1285	1485	2"	2"	3/8"	3/4"
710		790	1900	1930	135	585	1360	1460	2"	2"	3/8"	3/4"
900		790	2130	2160	145	490	1390	1590	2"	2"	3/8"	3/4"
200	15	450	1470	1490	145	385	1125	1225	2"	1"	3/8"	3/8"
270		500	1760	1780	150	410	1330	1450	2"	1"	3/8"	3/8"
500		650	1850	1870	170	485	1285	1485	2"	2"	3/8"	3/4"

COMPRESSED AIR RECEIVERS **P.E.D. OR**

COMPRESSED AIR / NITROGEN RECEIVERS (DIRECTIVE 2014/68/UE - P.E.D.)



TECHNICAL DESCRIPTION

Compressed air receivers allows to extract more air than the quantity produced by compressor, this without causing an under-pressure in the unit.
Built in mild steel, either painted, galvanized and painted with internal Polywarm® coating according to D.M. nr. 174 dated 06/04/2004.

APPLICATION

Storage and distribution of compressed air.

MATERIAL

- Painted mild steel (standard colour RAL 5002-Blue). Other colours on demand: RAL 5015 - Light Blue / RAL 3000 - Red / RAL 1021 - Yellow
- Galvanized mild steel.
- Painted mild steel version with internal Polywarm® coating.

DOCUMENTS ATTACHED

- CE certification - User Instructions

CERTIFICATIONS

Compressed air receivers are produced according to European Directive 2014/29/CE for items with a "volume x pressure" minor than 10.000 Bar x liter. These tanks are marked CE under the monitoring of an external control agency.

- Liquid in pressure: air
- Liquid group: 2
- Maximum working pressure: (See tab)
- Temperature: -10/+100°C

WORKING TEMPERATURE
Tmax
-10/+100 °C

CE



HORIZONTAL COMPRESSED AIR RECEIVER 2014/68/CE-P.E.D.

		GALVANIZED	PAINTED - *RAL 5002 BLUE (*)*
Pressure [Bar]	Model	Art. Nr.	Art. Nr.
8	1500	3054170990001	3054171340001
	2000	3054170990002	3054171340002
	3000	3054170990004	3054171340054
	4000	3054170990005	3054171340005
	5000	3054170990006	3054171340006
	8000	3054170990007	/
	10000	3054170990008	/
11	100	3053170990101	3053171340110
	200	3053170990102	3053171340111
	270	3053170990103	3053171340112
	500	3053170990104	3053171340113
	710	3053170990105	3053171340114
	900	3053170990106	3053171340115
12	1000	3054170990611	3054171340067
	1500	3054170990011	3054171340011
	2000	3054170990012	3054171340012
	2500	3054170990013	3054171340013
	3000	3054170990020	3054171340064
	4000	3054170990015	3054171340015
	5000	3054170990016	3054171340016
	8000	3054170990017	/
	10000	3054170990018	/
15	200	3053170990107	3053171340116
	270	3053170990108	3053171340117
	500	3053170990109	3053171340118



(*) Other colours on demand:
RAL 5015 Light Blue / RAL 3000 Red / RAL 1021 Yellow



HORIZONTAL COMPRESSED AIR RECEIVER 2014/68/CE-P.E.D.

	POLYWARM®
Pressure [Bar]	PAINTED RAL 5002 BLUE (*) FOOD INTERNAL COATING (POLYWARM®)
8	(on request) from 1500 to 5000
11	(on request) from 100 to 900
12	(on request) from 1000 to 5000
15	(on request) from 200 to 500



(*) Other colours on demand:
RAL 5015 Light Blue / RAL 3000 Red / RAL 1021 Yellow

COMPRESSED AIR RECEIVERS **P.E.D. OR**

COMPRESSED AIR / NITROGEN RECEIVERS (DIRECTIVE 2014/68/UE - P.E.D.)

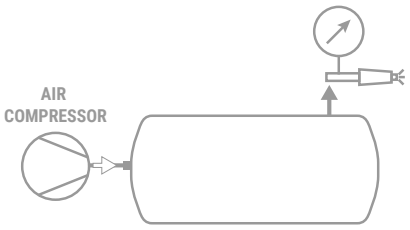

MODELS from 100 to 900

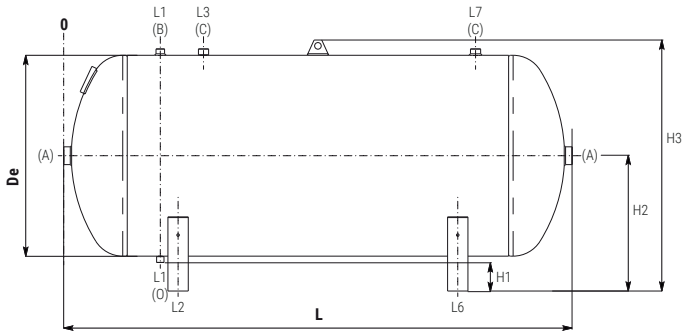

MODELS from 1000 to 5000

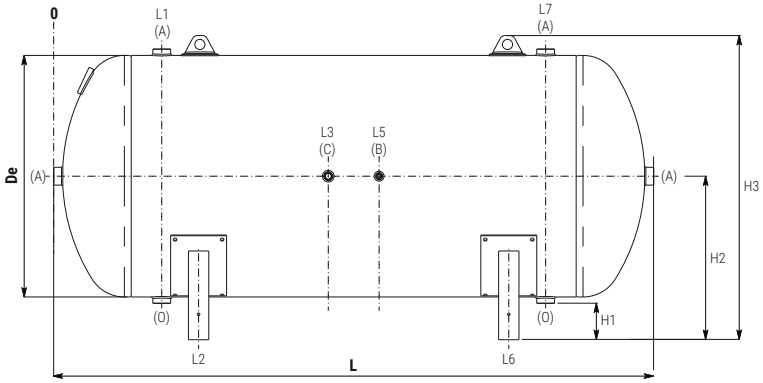

A	Input - use
B	Safety Valve/Instrumentation
C	Safety Valve/Instrumentation
O	Instrumentation

Model	Working Pressure	De	L	L1	L2	L3	L5	L6	L7	H1	H2	H3	A	B	C
	[bar]						[mm]						Connections F		
1500		950	2360	420	565	1080	1280	1795	1940	117	640	1196	2"	2"	3/8" 3/4"
2000		1100	2450	470	615	1125	1325	1835	1980	100	700	1330	2"	2"	3/8" 3/4"
3000		1200	2770	550	700	1285	1485	2070	2220	140	784	1480	2"	3"	3/8" 3/4"
4000	**8**	1450	2890	600	750	1345	1545	2140	2290	122	887	1670	2"	3"	3/8" 3/4"
5000		1450	3390	600	750	1595	1795	2640	2790	122	887	1670	2"	3"	3/8" 3/4"
8000		1650	3990	700	860	2495	2745	3130	3290	240	1100	2100	2"	4"	3/8" 3/4"
10000		1650	4990	700	860	3150	3400	4130	4290	240	1100	2100	2"	4"	3/8" 3/4"
100		400	950	225	310	340	-	640	725	80	305	566	2"	1/2"	3/8" 3/4"
200		450	1340	235	350	390	-	990	1105	80	330	615	2"	1/2"	3/8" 3/4"
270	**11**	500	1620	250	365	405	-	1255	1370	130	407	717	2"	1/2"	3/8" 3/4"
500		650	1700	295	400	440	-	1300	1405	130	480	870	2"	1/2"	3/8" 1"
710		790	1700	380	450	500	-	1250	1320	110	532	987	2"	1"	3/8" 1/2"
900		790	2000	380	450	550	-	1550	1620	110	532	987	2"	1"	3/8" 1/2"
1000		790	2250	350	570	1025	1225	1680	1900	110	532	987	2"	2"	3/8" 3/4"
1500		950	2360	420	565	2260	2460	1795	1940	117	640	1196	2"	2"	3/8" 3/4"
2000		1100	2450	470	615	2350	2550	1835	1980	100	700	1330	2"	2"	3/8" 3/4"
2500		1200	2520	510	655	2420	2620	1865	2010	140	800	1480	2"	3"	3/8" 3/4"
3000	**12**	1200	2770	550	700	2670	2870	2070	2220	140	784	1480	2"	3"	3/8" 3/4"
4000		1450	2890	600	750	2790	2990	2140	2290	122	887	1670	2"	3"	3/8" 3/4"
5000		1450	3390	600	750	3290	3490	2640	2790	122	887	1670	2"	3"	3/8" 3/4"
8000		1650	3990	700	860	2495	2745	3130	3290	240	1100	2100	2"	4"	3/8" 3/4"
10000		1650	4990	700	860	3150	3400	4130	4290	240	1100	2100	2"	4"	3/8" 3/4"
200		450	1340	235	350	390	-	990	1105	80	330	615	2"	1/2"	3/8" 3/4"
270	**15**	500	1620	250	365	405	-	1255	1370	130	407	717	2"	1/2"	3/8" 3/4"
500		650	1700	295	400	440	-	1300	1405	130	480	870	2"	1/2"	3/8" 1"

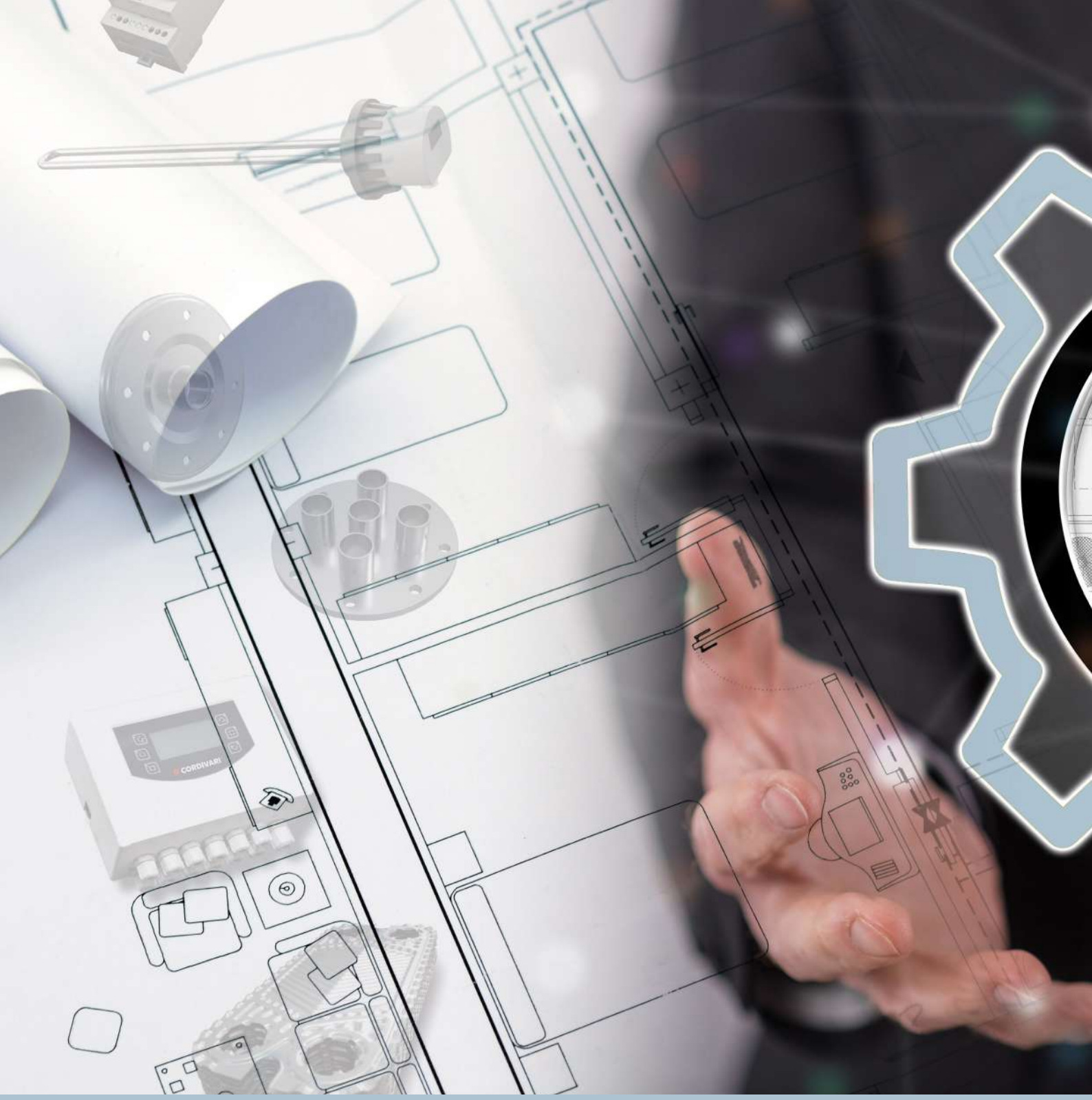

ACCESSORIES AND TECHNICAL SUPPORT

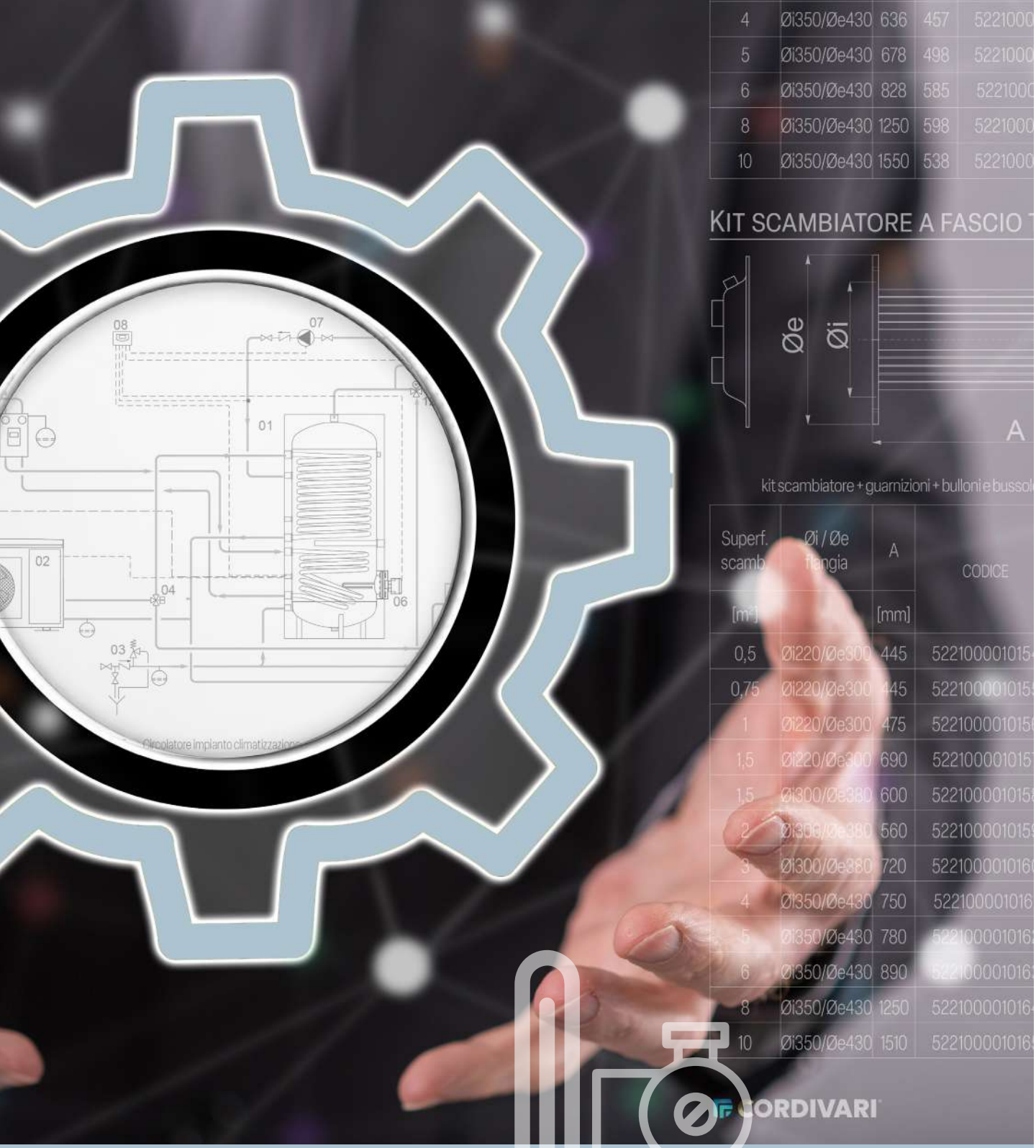

4	Øi350/Øe430	636	457	5221000
5	Øi350/Øe430	678	498	5221000
6	Øi350/Øe430	828	585	5221000
8	Øi350/Øe430	1250	598	5221000
10	Øi350/Øe430	1550	538	5221000

KIT SCAMBIATORE A FASCIO T

kit scambiatore + guarnizioni + bulloni e bussol

Superf. scamb. [m²]	Øi / Øe flangia	A [mm]	CODICE
0,5	Øi220/Øe300	445	52210000101
0,75	Øi220/Øe300	445	52210000101
1	Øi220/Øe300	475	52210000101
1,5	Øi220/Øe300	690	52210000101
1,5	Øi300/Øe380	600	52210000101
2	Øi300/Øe380	560	52210000101
3	Øi300/Øe380	720	52210000101
4	Øi350/Øe430	750	52210000101
5	Øi350/Øe430	780	52210000101
6	Øi350/Øe430	890	52210000101
8	Øi350/Øe430	1250	52210000101
10	Øi350/Øe430	1510	52210000101

CORDIVARI

HEAT MANAGER - SMART CONTROLLER WITH TEMPERATURE PROBE

Cordivari Heat Manager® is the new smart Wi-Fi controller for management remote from smartphone IOS or Android of the electric heaters.
Thanks to the application it is possible to manage, program and monitor, conveniently from your mobile phone, the operation of the electric heaters by setting their temperature and operating time bands.
Heat Manager® is practical and intuitive, it is in fact sufficient to install the application and connect the smart controller to your home Wi-Fi network.
The management application is also available in web application mode, so to allow access also via web browser from anywhere.
With Cordivari Heat Manager® it is possible to manage electric heaters connected to any boiler or to a compact solar thermosyphon systems.





Main Features:
Relay max 230V 16 A Wi-Fi 2,4 GHz; protection grade IP20.
The measuring temperature range is from -55°C to + 125°, with temperature range adjustable -55°C +100°C.

	Art. Nr.
Kit HEAT MANAGER electric immersion heater + temperature probe with 3 mt cable	5240000000074
Kit HEAT MANAGER electric immersion heater + temperature probe with 3 mt cable	5240000000075
Kit HEAT MANAGER electric immersion heater + temperature probe with 3 mt cable	5240000000076
Kit HEAT MANAGER electric immersion heater + temperature probe with 3 mt cable (for **Interka**)	5240000000077

www.cordivariheatmanager.com

ELECTRIC IMMERSION HEATERS KIT

ELECTRIC IMMERSION HEATERS from 1,5 to 3 kW - internal themostat

ELECTRIC IMMERSION HEATERS can be used as integration on calorifiers and tanks. Heating elements made of Incoloy, protection class min IP65, supplied with internal thermostat, safety thermostat reset user and 2 mt of electrical cable wired and without plug.
Temperature range: 30 °C / 70 °C

Art. Nr.	Tension	Output	Length L	Connection R
	Volt	[kW]	[mm]	G M
5240000000086	230 V MONOPHASE	1,5	370	1"1/2
5240000000087		2	370	
5240000000088		3	370	



ELECTRIC IMMERSION HEATERS from 1,5 to 3 kW

ELECTRIC IMMERSION HEATERS can be used as integration on calorifiers and tanks. Heating elements made of Incoloy 800, protection class min IP44+IP 65, supplied with thermostat, safety thermostat reset user and 2 mt of electrical cable wired and without plug.
Temperature range: 30 °C / 70 °C

Art. Nr.	Tension	Output	Length L	Connection R
	Volt	[kW]	[mm]	G M
5240000000051	230 V MONOPHASE	1,5	320	1"1/2
5240000000052		2	320	
5240000000053		3	320	

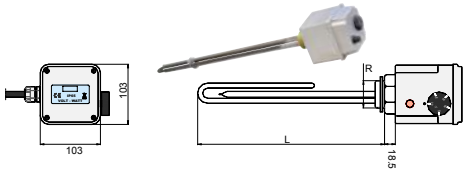

ACCESSORIES AND SPARE PARTS CALORIFIERS - MULTIFUEL ENERGY CYLINDERS

ELECTRIC IMMERSION HEATERS from 4 to 9 kW

ELECTRIC IMMERSION HEATERS can be used as integration on calorifiers and tanks. Heating elements made of Incoloy 800, protection class min IP45, supplied with thermostat, safety thermostat reset user and 2 mt of electrical cable wired and without plug. Temperature range: 30 °C / 70 °C

Art. Nr.	Tension	Output	Length L	Connection R
	[Volt]	[kW]	[mm]	G M
5240000000047	400 V THREEPHASE	4	415	1"1/2
5240000000048		5	500	
5240000000049		6	600	
5240000000050		9	750	

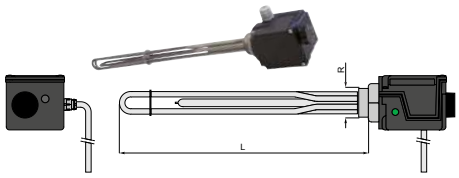

ELECTRIC IMMERSION HEATERS - 12 kW

12 kW electric heater with adjustment knob, adjustable temperature from 30 °C to 63 °C. Power supply: THREE-PHASE 400 V AC, 50/60 Hz. Degree of protection: IP65. Material: Incoloy. PVC cable, length 2 meters.
Insulation class: Class I.

Art. Nr.	Tension	Output	Length L	Connection R	Temperature range:
	[Volt]	[kW]	[mm]	G M	°C
5240000000031	400 V THREEPHASE	12	750	2"	30 °C / 63 °C

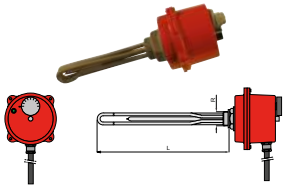

ELECTRIC IMMERSION HEATERS KIT (ANTI-LEGIONELLOSIS KIT + FULL CONTROL electronic unit)

Art. Nr.	Tension	Output	Length L	Connection
	Volt	[kW]	[mm]	M
5221000000111	230 V MONOPHASE	1,5	320	1" 1/2
5221000000112		2	320	



ELECTRIC IMMERSION HEATERS KIT (available on BOLLYTERM® HP NET models)

Art. Nr.	Tension	Output	Length L	Connection Ø
	Volt	[kW]	[mm]	[mm]
5221000000103	230 V MONOPHASE	1,5	275	75-140
5221000000064		2	320	1" 1/2



5221000000103



5221000000064

ELECTRIC IMMERSION HEATERS (available on INTERKA)

ELECTRIC IMMERSION HEATERS can be used as integration on calorifiers and tanks, cooper heaters, protection class IP45 supplied with thermostat, safety thermostat reset user and 2 mt of electrical cable wired and without plug. Specifical for Interka model.

Art. Nr.	Tension	Output	Length L	Connection R
	Volt	[kW]	[mm]	M
5240000000042	230 V MONOPHASE	1,5	340	1"1/4

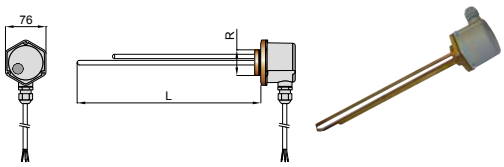

ELECTRIC IMMERSION HEATERS from 3 to 12 kW

ELECTRIC IMMERSION HEATERS can be used as integration on calorifiers and tanks. Heating elements made of Incoloy, supplied with thermostat and safety thermostat reset user.
Temperature range: 0 °C / 50 °C

Art. Nr.	Tension	Output	Length L	Connection R
	Volt	[kW]	[mm]	G M
5240000000054	230 V MONOPHASE 400 V THREEPHASE	3	300	1" 1/2
5240000000055		4.5	450	
5240000000056	400 V THREEPHASE	6	600	
5240000000057		9	700	
5240000000058		12	850	

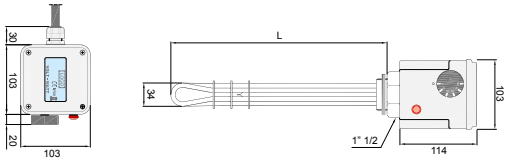

NEW ELECTRONIC CONTROL UNIT FOR CALORIFIERS, STORAGE TANKS AND THERMAL SYSTEMS

The new FULL CONTROL® Cordivari control unit, dedicated to the management of Domestic Hot Water (D.H.W.) storage tanks or thermovector fluids, features advanced, updated and EXCLUSIVE functions to maximise the performance and energy saving of Cordivari products.
Differentiated temperature control of the storage tank and of the various energy sources, including the solar system. The control unit is equipped with 4 NTC 10K sensors.



MAIN FEATURES

- Management of up to 8 outputs
- Chronothermostat with FULL and ECO-Crono programming
- Differentiated and coordinated Antilegionella management on tank and plant
- Management of a solar thermal system or integration with external solar thermal systems
- Management of up to 6 temperature probes + 1 input
- Integration with external domotic systems
- Management of differentiated and stratified heating in two phases and in two different storage tank zones (or in two different storage tanks) via the same generator



Art. Nr.	Version	suitale for
5220280000003	NOT MOUNTED ON TANK ON THE TANK	For existing systems – wall-mounted installation
5220280000004	MOUNTED ON TANK ON THE TANK	Models with soft insulation
5220280000005	MOUNTED ON TANK ON THE TANK	Models with hard insulation

Mounted versions can only be ordered together with the water heater.For Class A models, only the version not pre-assembled on the tank is available..

MAGNESIUM ANODES (FOR POLYWARM® COATED ONLY D.H.W. CALORIFIERS)

Corrosion protection of water heaters and thermal storage tanks is ensured not only by the type of internal lining, but also by the use of anodes. As standard, Cordivari provides magnesium sacrificial anodes; the impressed current electronic anode is available as an accessory.



Art. Nr.	PACKAGE	Dimen. [mm]	MODEL - **[nr. of anodes]** Extra 1,2,3, Vasi Inerziali, Vasi Storage	Interka Solare	Interka, Bolly® Murale	Bolly® (ST, AP, FB, PDC, Class A), Bollyterm HP	Bolly® XL, Bolly® HY	COMBI
7200000041007	Nr. 2 chain anodes + insulated cap + gasket - 3/4" M	22 x 705	–	–	–	–	–	800 **[x1]**, 1000 **[x1]**, 1500 **[x1]**, 2000 **[x1]**
7200000041016	Nr. 2 chain anodes + insulated cap + gasket - 3/4" M	22 x 535	–	–	–	–	–	500 **[x1]**, 600 **[x1]**
7200000041010	Nr. 2 anodes + insulated cap 1" 1/4	32 x 350	200**[x1]**, 300**[x1]**	300 **[x1]**	200**[x1]**, 300**[x1]**	*Bolly® 1,2:* 150**[x1]**,200**[x1]** *Bollyterm 1,2:* 200**[x1]**	–	–
7200000041011	Nr. 2 anodes + insulated cap 1" 1/4	32 x 450	–	200**[x1]**, 300**[x1]**	–	*Bolly® 1,2/ Bollyterm 1,2:* 300**[x1]**	200 **[x1]**	–
7200000041012	Nr. 2 anodes + insulated cap 1" 1/4	32 x 650	800 **[x1]**, 1000 **[x1]**, 2000 **[x2]**	–	–	*Bolly® 1,2:* 500**[x1]** *Bolly® 1:* 800**[x1]** *Bolly® 2:* 1000 **[x2]**	*Bolly® 1:* 300**[x1]**, *Bolly® 2 XL:* 500**[x1]** -800,1000**[x2]** *Bolly® HY:* 250**[x1]**	–
7200000041013	Nr. 2 anodes + insulated cap 1" 1/4	32 x 850	1300 **[x1]**, 1500**[x2]**, 2500**[x2]**, 3000**[x2]**, 4000**[x2]**, 5000**[x2]**	–	–	*Bolly® 1:* 1500 **[x2]**, *Bolly® 2:* 1500 **[x2]**, 2000 **[x2]**	*Bolly® 1:* 400 **[x1]**, 1500 **[x2]**, 500 **[x1]**, 800,1000 **[x1]**	–
7200000041017	Nr. 2 anodes + insulated cap 1" 1/4	32 x 800	–	–	–	*Bolly® 1:* 1000 **[x1]**	–	–
7200000041014	Nr. 2 anodes + insulated cap 1" 1/4	32 x 520	500 **[x1]**	–	–	*Bolly® 1,2:* 400 **[x1]**, *Bolly® 2:* 800 **[x2]**	*Bolly® 2 XL:* 300**[x1]**	–
7200000041015	Nr. 2 anodes + insulated cap 1" 1/4	32 x 200	–	150**[x1]**, 200**[x1]**	80 **[x1]**, 100 **[x1]**, 150 **[x1]**	–	–	–



Art. Nr.	SINGLE PIECE	Dimen. [mm]						
7200001490041	Nr. 1 chain anode + insulated cap + gasket - 3/4" M	22 x 705	–	–	–	–	–	800 **[x1]**, 1000 **[x1]**, 1500 **[x1]**, 2000 **[x1]**
7200001490040	Nr. 1 chain anode + insulated cap + gasket - 3/4" M	22 x 535	–	–	–	–	–	500 **[x1]**, 600 **[x1]**
7200001490039	Nr. 1 anode + insulated cap - 1" 1/4	32 x 1220	–	–	–	–	800 **[x1]**, 1000 **[x1]**	–
7200001490033	Nr. 1 anode + insulated cap 1" 1/4	32 x 350	200**[x1]**, 300**[x1]**	300 **[x1]**	200**[x1]**, 300**[x1]**	*Bolly® 1,2:* 150**[x1]**,200**[x1]** *Bollyterm 1,2:* 200**[x1]**	–	–
7200001490034	Nr. 1 anode + insulated cap1" 1/4	32 x 450	–	200**[x1]**, 300**[x1]**	–	*Bolly® 1,2/ Bollyterm 1,2:* 300**[x1]**	200 **[x1]**	–
7200001490036	Nr. 1 anode + insulated cap 1" 1/4	32 x 650	800 **[x1]**, 1000 **[x1]**, 2000 **[x2]**	–	–	*Bolly® 1,2:* 500**[x1]** *Bolly® 1:* 800**[x1]** *Bolly® 2:* 1000 **[x2]**	*Bolly® 1:* 300**[x1]**, *Bolly® 2 XL:* 500**[x1]** -800,1000**[x2]** *Bolly® HY:* 250**[x1]**	–
7200001490038	Nr. 1 anode + insulated cap 1" 1/4	32 x 850	1300 **[x1]**, 1500**[x2]**, 2500**[x2]**, 3000**[x2]**, 4000**[x2]**, 5000**[x2]**	–	–	*Bolly® 1:* 1500 **[x2]**, *Bolly® 2:* 1500 **[x2]**, 2000 **[x2]**	*Bolly® 1:* 400 **[x1]**, 1500 **[x2]**, 500 **[x1]**, 800,1000 **[x1]**	–
7200001490037	Nr. 1 anode + insulated cap 1" 1/4	32 x 800	–	–	–	*Bolly® 1:* 1000 **[x1]**	–	–
7200001490035	Nr. 1 anode + insulated cap 1" 1/4	32 x 520	500 **[x1]**	–	–	*Bolly® 1,2:* 400 **[x1]**, *Bolly® 2:* 800 **[x2]**	*Bolly® 2 XL:* 300**[x1]**	–
7200001490032	Nr. 1 anode + insulated cap 1" 1/4	32 x 200	–	150**[x1]**, 200**[x1]**	80 **[x1]**, 100 **[x1]**, 150 **[x1]**	–	–	–

Art. Nr.	PACKAGE	Art. Nr.	SINGLE PIECE	[mm]	MODEL - **[nr. of anodes]**	
7200000041008	Nr. 2 anodi M8	7200001490005	Nr. 1 anode M8	32 x 200	150 **[x1]**	*Spare parts available only for Interka Solar models produced before 2015*
7200000041009	Nr. 2 anodi M8	7200001490006	Nr. 1 anode M8	32 x 400	200**[x1]**, 300**[x1]**	

MAGNESIUM ANODE + ELECTRIC IMMERSION HEATER KIT FOR BOLLYTERM® HOME

Magnesium anode + electric immersion heater kit for Bollyterm® HOME

Art. Nr.	Kit includes:	AVAILABLE ON
7117000002147	- Nr. 1 magnesium anode 1" 1/4 M - Nr. 1 electric immersion heater(1,5 kW - 230 V)	Bollyterm® Home range



ELECTRONIC ANODE WITH TITANIUM IMPRESSED ELECTRICITY *(FOR POLYWARM® COATED ONLY)*



Art. Nr.	Length [mm]	Conn. M	AVAILABLE ON: Extra1,2,3 Vasi Inerz. e Storage Polywarm®	Interka, Interka Panarea, Bolly® Murale	BOLLY® RANGE (ST, AP, PDC, FB, Class A) Bollyterm® HP NET	Bolly® XL, Bolly® HY
5200000000008	210	1"1/4	200, 300	80, 100, 120, 150, 200, 300	150, 200, 300	200
5200000000009	510	1"1/4	500, 800	–	–	400, 500
5200000000011	380	1"1/4	1000, 1500	–	400, 500, 800, 1000.	300
5200000000012	2x 380	1"1/4	–	–	*Bolly® 1:* 1500, *Bolly® 2:* 800, *Bolly® 2:* 1000	*Bolly® 1-2:* 800
5200000000013	2x 720	1"1/4	2000, 2500, 3000, 4000, 5000	–	*Bolly® 2:* 1500	*Bolly® 1 -2:* 1500 *Bolly® 1-2:* 1000

• Use
The Titanium electronic anode is, by opposite to the normal one, not subject to consumption and doesn't need any maintenance or replacement. The protection against corrosion is obtained ensuring the electrolyte power through the continuous energy produced by the titanium bar.

• Material
The anode is composed by a Titanium rod, with its active final part, that has to be connected to the vessel.
This system ensures the good working and a long life both to the anode and the cilinder.

• Operating conditions
The input disposal is positioned in a insulated box and it's equipped with a light led, located on front side. Green light=working OK – Red light = Wrong working.
In this last case it's necessary to take the electrical plug away and get in touch with an installer, that will provide to put everything in good order.

• Advantage
1. Active protection through the power given by the titanium anode.
2. High level working flexibility, in order to fit to the different internal coatings and to the water capacity, ensured by an automatic regulation of the working electricity
3. Definitive and easy protection. It is important anyway to check that the electricity is constantly working.
4. Cancelation of any worries and maintenance problems and costs.

ELECTRONIC ANODE WITH TITANIUM IMPRESSED ELECTRICITY *(FOR STAINLESS STEEL CALORIFIERS)*

In normal use conditions of drinking water (European directive 98 / 83 CE) the standard cathodic protection (using magnesium anode) of the tanks is adequately enough. However, depending on the place of installation, the drinking water conditions may differ significantly from the standard reference. In these cases, when the chloride content exceeds 150 mg/lt, it is advisable to install a permanent Correx UP cathodic system on the tank, which is maintenance-free.



Art. Nr.	Description/ lenght [mm]	AVAILABLE ON: Vaso Inerziale - Vaso Inerz. Compact			Extra1 - Extra1 Compact - Extra1 Vapore		Extra2			Extra2 Compact	
5200000000015	N.2 Anodes/ 1X800/1x400	1500	–	–	–	–	–	–	–	–	–
5200000000016	N.3 Anodes/800	2000	2500	3000	1500	2000	–	–	–	–	–
5200000000017	N.4 Anodes/800	4000	5000	–	2500	3000	1500	2000	2500	2500	3000
5200000000018	N.5 Anodes/800	–	–	–	4000	5000	3000	4000	5000	4000	–

ELECTRONIC ANODE WITH TITANIUM IMPRESSED ELECTRICITY *(FOR BOLLYTERM HP NET)*



Art. Nr.	Description
7200000000016	Kit electronic anode for BOLLYTERM® HP NET

MAGNESIUM ANODES KIT AVAILABLE ON ANODEN TESTER

Anode with insulated cap



The calorifiers corrosion protection is guaranteed not only by the internal coating material but also by the anodes.

Art. Nr.	PACKAGE	Dimen. [mm]	AVAILABLE ON: Extra 1,2,3, Vasi Inerziali, Vasi Storage	Bolly® (ST,FB,PDC Class A) Bollyterm® HP NET	Bolly® XL, Bolly® HY
7200000041001	Nr. 3 anodes + insulated cap + gasket - G1"1/4	32x 350	200 **[x1]**, 300 **[x1]**	150 **[x1]** 200 **[x1]**	
7200000041002	Nr. 3 anodes + insulated cap + gasket - G1"1/4	32 x 450	–	300 **[x1]**	200 **[x1]**
7200000041003	Nr. 3 anodes + insulated cap + gasket - G1"1/4	32 x 520	500 **[x1]**	400 **[x1]**, Bolly® 2 800 **[x2]**	Bolly® 2 300 **[x1]**
7200000041004	Nr. 3 anodes + insulated cap + gasket - G1"1/4	32 x 650	1000 **[x1]** 800 **[x1]** 2000 **[x2]**	500(1), 800 **[x1]** Bolly® 2 1000 **[x2]**	Bolly® 1 300 **[x1]**, Bolly® 2 500 **[x1]** Bolly® 2 800 **[x2]**
7200000041005	Nr. 2 anodes + insulated cap + gasket - G1"1/4	32 x 800	1300 **[x1]** 3000 **[x2]**	Bolly® 1000 **[x1]**, Bolly® 2 1500 **[x2]**	Bolly® 2 1000 **[x2]**
7200000041006	Nr. 2 anodes + insulated cap + gasket - G1"1/4 as	32 x 900	1500 **[x1]** 2500 **[x2]** 4000 **[x2]** 5000 **[x2]**	Bolly® 1 1500 **[x1]**, 2000 **[x2]**	Bolly® 1 500 **[x1]** Bolly® 1 800 **[x1]** Bolly® 1 1000 **[x1]**

Art. Nr.	SINGLE PIECE	Dimen. [mm]	AVAILABLE ON: Extra 1,2,3, Vasi Inerziali, Vasi Storage	Bolly® (ST,FB,PDC Class A) Bollyterm® HP NET	Bolly® XL, Bolly® HY
7200001490018	Nr. 1 anode + insulated cap + gasket - G1"1/4	32x 350	200 **[x1]**, 300 **[x1]**	150 **[x1]** 200 **[x1]**	
7200001490019	Nr. 1 anode + insulated cap + gasket - G1"1/4	32 x 450	–	300 **[x1]**	200 **[x1]**
7200001490021	Nr. 1 anode + insulated cap + gasket - G1"1/4	32 x 520	500 **[x1]**	400 **[x1]**, Bolly® 2 800 **[x2]**	Bolly® 2 300 **[x1]**
7200001490020	Nr. 1 anode + insulated cap + gasket - G1"1/4	32 x 650	1000 **[x1]** 800 **[x1]** 2000 **[x2]**	500(1), 800 **[x1]** Bolly® 2 1000 **[x2]**	Bolly® 1 300 **[x1]**, Bolly® 2 500 **[x1]** Bolly® 2 800 **[x2]**
7200001490022	Nr. 1 anode + insulated cap + gasket - G1"1/4	32 x 800	1300 **[x1]** 3000 **[x2]**	Bolly® 1000 **[x1]**, Bolly® 2 1500 **[x2]**	Bolly® 2 1000 **[x2]**
7200001490023	Nr. 1 anode + insulated cap + gasket - G1"1/4	32 x 900	1500 **[x1]** 2500 **[x2]** 4000 **[x2]** 5000 **[x2]**	Bolly® 1 1500 **[x1]**, 2000 **[x2]**	Bolly® 1 500 **[x1]** Bolly® 1 800 **[x1]** Bolly® 1 1000 **[x1]**

ANODEN-TESTER



Art. Nr.	Description
7221000000031	Anoden Tester (2 units box)

ANODEN TESTER KIT
It is the new system to keep easily under control by seeing the consumption of the magnesium anode. You have just to push the button to check if the anode has to be replaced. Included with the anoden-tester, cap and boss.

RECIRCULATION KIT FOR CALORIFIERS AND BUFFER TANKS



The use of Cordivari's recirculation kit allows to improve the comfort of the user and to reduce the waste and produce DHW immediately at the right temperature.
In particular, the Cordivari electronic recirculation kit allows to:
- Maximize the energy saving by programming the recirculation temperature on basis of our own habits.
- Daily and weekly scheduling to manage until 8 time slots for each day of the week
- Constantly monitoring the working and the efficiency of the recirculation thanks to the self-diagnostics of the system
- Works also without the temperature's probe into system where the probe is not foreseen, through programmable temporary actions.

Art. Nr.	Control display + pump (for D.H.W.)
5221000000038	

VALVES KIT

RECYCLE KIT - ECO COMBI



Art. Nr.
5221000000019
Connection 3/4"

RECYCLE KIT AND MIXER - ECO COMBI



Art. Nr.
5221000000020
Connection 3/4" M

SAFETY VALVE PRIMARY CIRCUIT



Art. Nr.	calibration
5302000000021	2,5 bar
Connection 1/2" M x G 1/2" F for Interka Panarea	

See catalogue INTEGRATED SOLAR THERMAL SYSTEM

TEMPERATURE AND PRESSURE SAFETY VALVE



Art. Nr.	Calibration
5302000000020	90°C/6bar
Connection 1/2" M x G 1/2" F (Avoiding over temperature when there is no withdrawing of D.H.W.)	

See catalogue INTEGRATED SOLAR THERMAL SYSTEM

BUFFER TANKS CONNECTING KIT

Stainless steel extensible connecting hose



Art. Nr.	Connection	Length
5006170001001	1" 1/2	200 ÷ 400 mm

ADJUSTABLE SUPPORTING FEET *(BOLLY® CALORIFIERS RANGE)*

3 adjustable supporting feet, allowing a correct positioning of the tanks at not in-level floor. Suitable only for the models with feet.

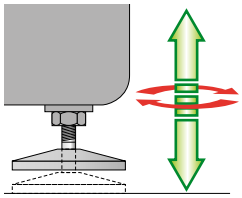

Art. Nr.	Description
5221000000029	Kit 3 adjustable supporting feet

BOLLY® PRIMO WALL FIXING KIT

Fixing kit for wall mounting (vertical or horizontal) for Bolly® PRIMO, including galvanized steel brackets and PVC bottom caps.



Art. Nr.	Bolly® Primo Model
5221000000069	**100**
5221000000070	**150**
5221000000071	**200**
5221000000072	**300**





HYDRAULIC SAFETY GROUP

This accessory includes, a 8 bar safety valve, nonreturn valve, 2 on-off valves.
Its function is to protect tha sanitary circuit from overpressure (according to italian national regulation), fully covered inside the carter.



Art. Nr.	Connection	Pressure
5760000001001	1"	8 bar
5760000001002	3/4"	8 bar

THERMOMETER

1/2" connection Thermometer- - from 0°-120°C



Art. Nr.	Description	Connection	Diameter [mm]
5032240000107	5 pcs	1/2" GM	60

CANALIZATION FOR BOLLYTERM® HOME

PLASTIC ELEMENTS FOR CANALIZATION

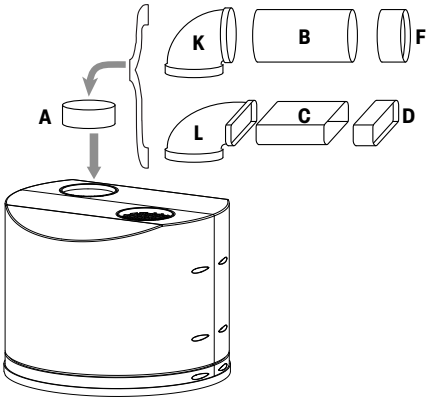

		Art. Nr.	DESCRIPTION
	A	5221000000085	Stub pipe of Ø 125 mm Length 75 mm
	B	5221000000086	Tube of Ø 125 Mm Length 1200 mm
	C	5221000000087	Rectangular tube of Ø 150x70 mm Length 1200 mm
	D	5221000000088	Rectangular plastic joint Ø 150x70 mm
		5221000000089	Horizontal joint from round pipe of Ø125 mm Rectangular Ø 150x70 mm
	F	5221000000090	Round joint Ø 125 mm
		5221000000091	Flexible tube Ø 125 mm Length 1000 mm
		5221000000092	Flexible rectangular tube Ø 150x70 mm Length 1000 mm
		5221000000093	Rectangular curve Ø 150x70 mm horizontal
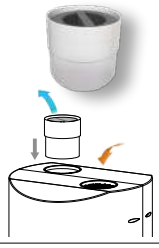		5221000000107	**NEW** **Sound pressure reduction** Ø 125 L 120 mm Acoustic silencer to reduce by 6dbA the declared values (49 dBA). Tested according to UNI EN 12102-2 and UNI EN ISO 3741 standards.

	Art. Nr.	DESCRIPTION
	5221000000094	Rectangular curve Ø 150x70 mm vertical
 K	5221000000095	Round elbow curve Ø125 mm
 L	5221000000096	Vertical curve from round Ø 125 mm to rectangular Ø 150x70 mm
	5221000000097	Pair of pipe clamps Ø 150 mm
	5221000000098	Pair of brackets for rectangular tubes Ø 150x70 mm
	5221000000099	Plastic grid with fixed fins for tubes of Ø 125 mm
	5221000000100	Roll of adhesive white tape for tubes, width 50 x length 10 mt
	5221000000101	Plastic pipe flange for tubes of Ø 125 mm

CANALIZATION FOR BOLLYTERM® HOME

CANALIZATION EXAMPLES

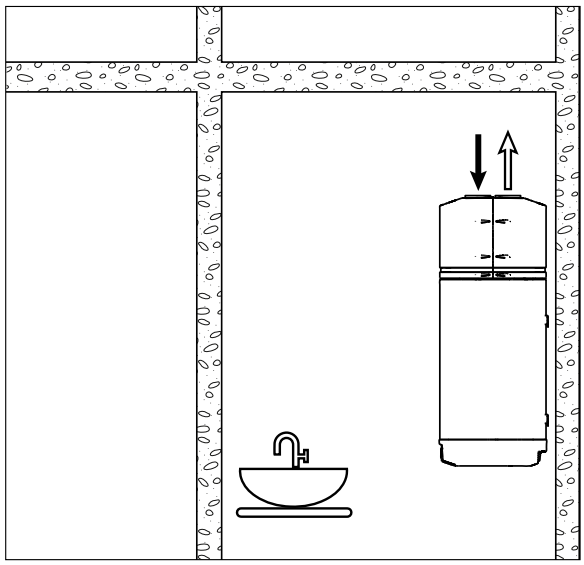

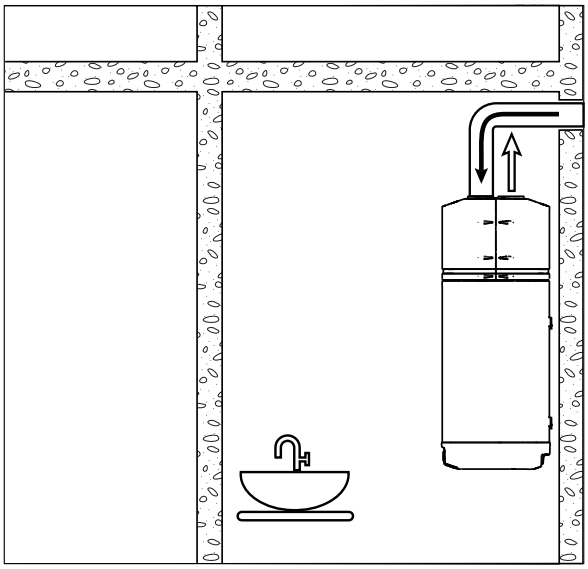

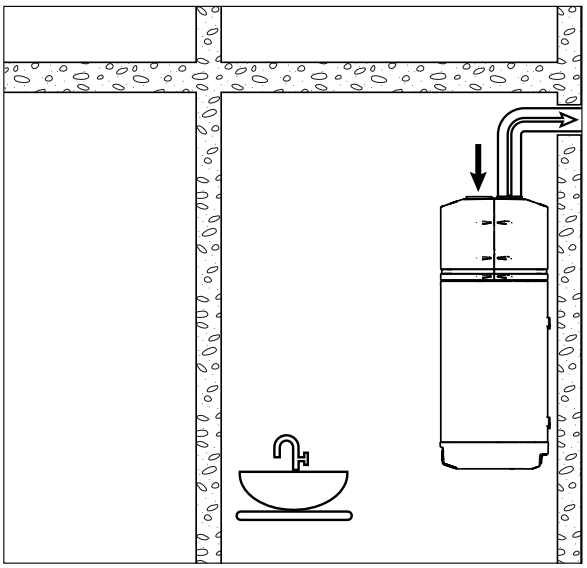

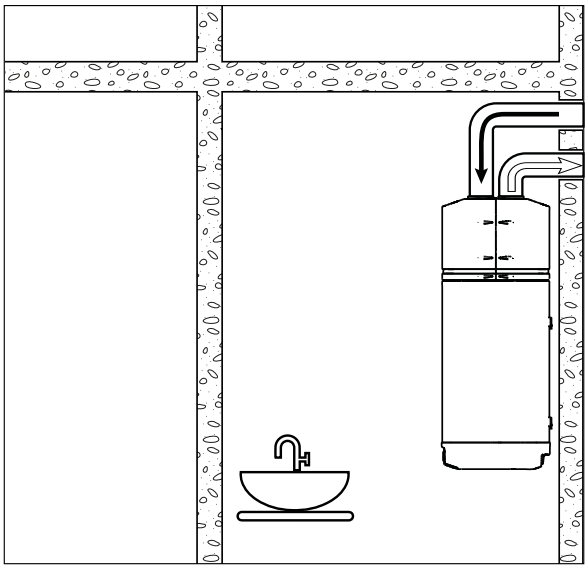

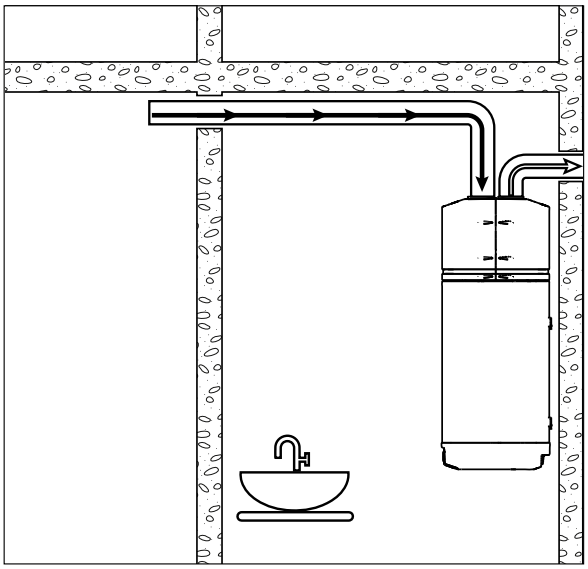

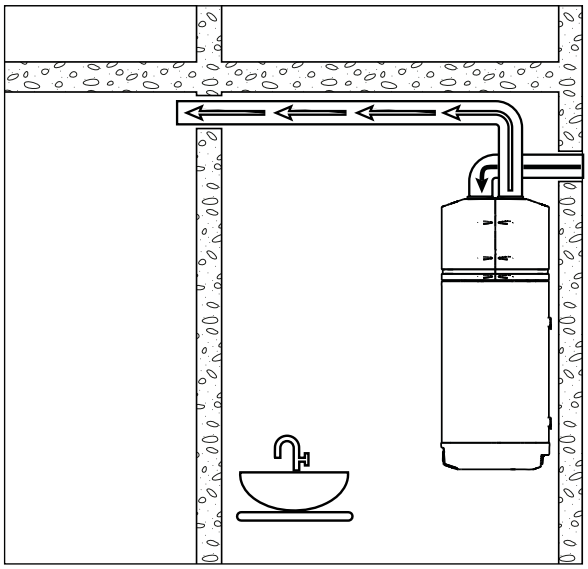

ACCESSORIES AND SPARE PARTS CALORIFIERS

LOWER HEAT EXCHANGER FOR EXTRA 1,2 AND 3 VT CALORIFIERS

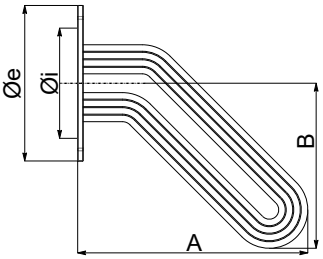



The Antilegionella® coil, which is the heat exchanger with tubes bent to the bottom is an efficient innovation installed as a standard on every Cordivari's Extra calorifiers. This reduces the diffusion of legionellosis bacterium.
Advantages:
- The Antilegionella® curved heat exchanger can heat the complete quantity of water in an homogenous way. Even in the bottom area of the boiler which is impossible with traditional heat exchanger.
- Possibility of using lower capacity boilers for the same quantity of hot water needed.

Kit including: exchanger, gaskets, bolts and insulated bushes.
MAX WORKING PRESSURE: 12 bar
MAX WORKING TEMPERATURE: 110 °C

STAINLESS STEEL 316L
ANTILEGIONELLA® HEAT EXCHANGER WITH SILICONE GASKET

Heat exchangers surface	Øi/Øe	A	B	Art. Nr.	AVAILABLE ON:
[m²]		[mm]			
0,5	Øi220/Øe300	350	240	7204001210100	• EXTRA1 WXC 200 - EXTRA1 XXC 200 • EXTRA2 WXC 200 - EXTRA2 XXC 200
0,75	Øi220/Øe300	350	240	7204001210101	• EXTRA1 WXC 300 - EXTRA1 XXC 300 • EXTRA2 WXC 300 - EXTRA2 XXC 300
1	Øi220/Øe300	371	261	7204001210102	• EXTRA1 WXC 500 - EXTRA1 XXC 500
1,5	Øi220/Øe300	561	311	7204001210113	• EXTRA2 WXC 500 - EXTRA2 XXC 500
1,5	Øi300/Øe380	496	336	7204001210103	• EXTRA1 WXC 800 - EXTRA 1 XXC 800
2	Øi300/Øe380	496	336	7204001210104	• EXTRA1 WXC 1000 - EXTRA1 XXC 1000 • EXTRA2 WXC 800 - EXTRA 2 XXC 800
3	Øi300/Øe380	607	452	7204001210105	• EXTRA1 WXC 1500 - EXTRA1 XXC 1500 • EXTRA 1 WXC 1500 COMPACT • EXTRA2 WXC 1000 - EXTRA2 WXC 1500 EXTRA2 XXC 1000 - EXTRA2 XXC 1500 • EXTRA3 WXC 1500
4	Øi350/Øe430	636	457	7204001210106	• EXTRA1 WXC 2000 - EXTRA1 XXC 2000 • EXTRA1 WXC 2000 COMPACT • EXTRA2 WXC 2000 - EXTRA2 XXC 2000 • EXTRA3 WXC 2000
5	Øi350/Øe430	678	498	7204001210107	• EXTRA1 WXC 2500 - EXTRA1 XXC 2500 • EXTRA1 WXC 2500 COMPACT • EXTRA2 WXC 2500 - EXTRA2 XXC 2500
6	Øi350/Øe430	828	585	7204001210114	• EXTRA1 WXC 3000 - EXTRA1 XXC 3000 • EXTRA1 WXC 3000 COMPACT • EXTRA2 WXC 3000 - EXTRA 3 WXC 3000 • EXTRA2 XXC 3000
8	Øi350/Øe430	1250	598	7204001210108	• EXTRA1 WXC 4000 - EXTRA1 XXC 4000 • EXTRA1 WXC 4000 COMPACT • EXTRA2 WXC 4000 - EXTRA2 XXC 4000
10	Øi350/Øe430	1550	538	7204001210109	• EXTRA1 WXC 5000 - EXTRA1 XXC 5000 • EXTRA2 WXC 5000 - EXTRA2 XXC 5000 • EXTRA3 WXC 5000

ACCESSORIES AND SPARE PARTS CALORIFIERS

MIDDLE AND UPPER HEAT EXCHANGERS FOR CALORIFIERS EXTRA 2 AND 3 VT AND EXTRA 1 HOR

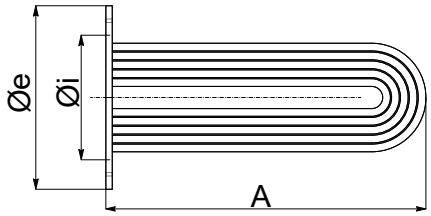



316L Stainless steel straight heat exchangers
Kit including: exchanger, gaskets, bolts and insulated bushes.
MAX WORKING PRESSURE: 12 bar
MAX WORKING TEMPERATURE: 110 °C

STRAIGHT EXCHANGER
STAINLESS STEEL 316L WITH SILICONE GASKET

Heat exchangers surface	Øi/Øe	A
[m²]	[mm]	
0,5	Øi220/Øe300	445
0,75	Øi220/Øe300	445
1	Øi220/Øe300	475
1,5	Øi220/Øe300	690
1,5	Øi300/Øe380	600
2	Øi300/Øe380	560
3	Øi300/Øe380	720
4	Øi350/Øe430	750
5	Øi350/Øe430	780
6	Øi350/Øe430	890
8	Øi350/Øe430	1250
10	Øi350/Øe430	1510

Art. Nr.	AVAILABLE ON:		
7204001210074	• EXTRA1 WXC OR 200 EXTRA1 XXC OR 200	• EXTRA2 WXC 200 EXTRA2 XXC 200	---
7204001210075	• EXTRA1 WXC OR 300 EXTRA1 XXC OR 300	• EXTRA2 WXC 300 EXTRA2 XXC 300	---
7204001210076	• EXTRA1 WXC OR 500 EXTRA1 XXC OR 500	---	---
7204001210077	---	• EXTRA2 WXC 500 EXTRA2 XXC 500	---
7204001210078	• EXTRA1 WXC OR 800 EXTRA1 XXC OR 800	---	• EXTRA3 WXC 1500
7204001210079	• EXTRA1 WXC OR 1000 EXTRA1 XXC OR 1000	• EXTRA2 WXC 800 EXTRA2 WXC 1000 EXTRA2 XXC 800-1000	• EXTRA3 WXC 2000
7204001210080	• EXTRA1 WXC OR 1500 EXTRA1 XXC OR 1500	• EXTRA2 WXC 1500 EXTRA2 XXC 1500 • EXTRA3 WXC 1500	• EXTRA3 WXC 3000
7204001210081	• EXTRA1 WXC OR 2000 EXTRA1 XXC OR 2000	• EXTRA2 WXC 2000 EXTRA2 XXC 2000 • EXTRA3 WXC 2000	---
7204001210082	• EXTRA1 WXC OR 3000 EXTRA1 XXC OR 3000	EXTRA2 WXC 2500 EXTRA2 XXC 2500	• EXTRA3 WXC 5000
7204001210087	---	EXTRA2 WXC 3000 EXTRA2 XXC 3000	---
7204001210083	• EXTRA1 WXC OR 4000 EXTRA1 XXC OR 4000	EXTRA2 WXC 4000 EXTRA2 XXC 4000 EXTRA3 WXC 4000	---
7204001210084	• EXTRA1 WXC OR 5000 EXTRA1 XXC OR 5000	EXTRA2 WXC 5000 EXTRA2 XXC 5000 EXTRA3 WXC 5000	---

COMPATIBILITY TABLES VASO STORAGE/HEAT EXCHANGERS

(See next page)





ACCESSORIES AND SPARE PARTS CALORIFIERS

ANTILEGIONELLA® HEAT EXCHANGER KIT *(EXCHANGER HEAD INCLUDED)*

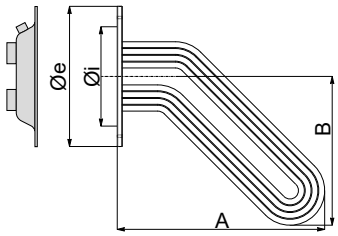

Antilegionella® heat exchanger kit + gaskets + bolts and insulated bushes.

Antilegionella® 316L staninless steel curved heat exchanger kit + gaskets + bolts and insulated bushes.
MAX WORKING PRESSURE: 12 BAR
MAX WORKING TEMPERATURE: 110 °C

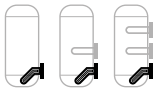

ANTILEGIONELLA® HEAT EXCHANGER

Heat exchanger surface	Øi / Øe flange	A	B	Art. Nr.	Storage 1-2		Storage 1-2-3	Storage 1-2	Storage 1-2-3	Storage 1-2-3		Storage 1-2-3 Storage COMPACT	Storage 1-2	Storage 1-2-3	Storage 1-2-3
					Model										
[m²]	[mm]				200	300	500	800	1000	1500	2000	2500	3000	4000	5000
0,5	Ø220/Øe300	350	240	5221000010142	✓	✓	✓								
0,75	Øi220/Øe300	350	240	5221000010143	✓	✓	✓								
1	Øi220/Øe300	371	261	5221000010144			✓								
1,5	Øi220/Øe300	561	311	5221000010145			✓								
1,5	Øi300/Øe380	496	336	5221000010146				✓	✓	✓					
2	Øi300/Øe380	496	336	5221000010147				✓	✓	✓					
3	Øi300/Øe380	607	452	5221000010148					✓	✓					
4	Øi350/Øe430	636	457	5221000010149							✓	✓	✓	✓	✓
5	Øi350/Øe430	678	498	5221000010150							✓	✓	✓	✓	✓
6	Øi350/Øe430	828	585	5221000010151									✓	✓	✓
8	Øi350/Øe430	1250	598	5221000010152										✓	✓
10	Øi350/Øe430	1550	538	5221000010153											✓

STRAIGHT HEAT EXCHANGER KIT *(EXCHANGER HEAD INCLUDED)*

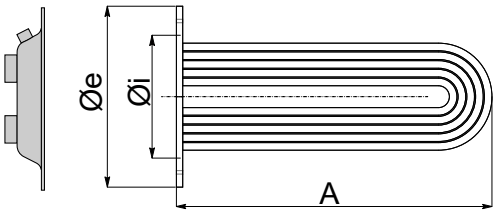

Straight heat exchanger kit + gaskets + bolts and insulated bushes.

Straight 316L staninless steel heat exchanger kit + gaskets + bolts and insulated bushes.
MAX WORKING PRESSURE: 12 BAR
MAX WORKING TEMPERATURE: 110 °C



MIDDLE HEAT EXCHANGER

UPPER HEAT EXCHANGER

Heat exchanger surface	Øi / Øe flange	A	Art. Nr.	Storage 2-3											Storage 2-3					
				Model											Model					
[m²]		[mm]		200	300	500	800	1000	1500	2000	2500	3000	4000	5000	500	1000	1500	2000	3000	5000
0,5	Øi220/Øe300	445	5221000010154	✓	✓	✓									✓					
0,75	Øi220/Øe300	445	5221000010155	✓	✓	✓									✓					
1	Øi220/Øe300	475	5221000010156	✓	✓	✓									✓					
1,5	Øi220/Øe300	690	5221000010157			✓									✓					
1,5	Øi300/Øe380	600	5221000010158				✓	✓	✓							✓	✓	✓	✓	
2	Øi300/Øe380	560	5221000010159				✓	✓	✓							✓	✓	✓	✓	
3	Øi300/Øe380	720	5221000010160				✓	✓	✓							✓	✓	✓	✓	
4	Øi350/Øe430	750	5221000010161							✓	✓	✓	✓	✓						✓
5	Øi350/Øe430	780	5221000010162							✓	✓	✓	✓	✓						✓
6	Øi350/Øe430	890	5221000010163							✓	✓	✓	✓	✓						✓
8	Øi350/Øe430	1250	5221000010164								✓	✓	✓	✓						✓
10	Øi350/Øe430	1510	5221000010165											✓						✓

ACCESSORIES AND SPARE PARTS CALORIFIERS

FINNED HEAT EXCHANGER KIT

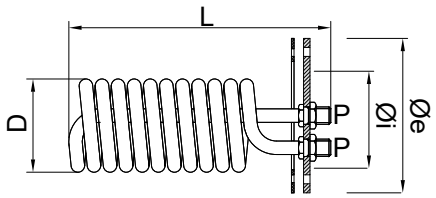

Copper finned and tinned heat exchangers+ flange plate + gaskets + bolts and insulated bushes.
MAX WORKING PRESSURE: 12 BAR
MAX WORKING TEMPERATURE: 110 °C

Finned heat exchanger kit + flange plate + gaskets + bolts and insulated bushes.

MIDDLE AND **LOWER** HEAT EXCHANGER — **UPPER** HEAT EXCHANGER

Heat exchanger surface	Øi / Øe flange	D	L	P	Capacity	Art. Nr.	Storage 1/ 1 COMPACT / 2 / EXTRA PLUS 1-2-3										Storage 3 / EXTRA PLUS 3					
							Model										Model					
[m²]	[mm]				[lt]		200	300	500	800	1000	1500	2000	2500	3000	4000	5000	500	1000	1500	2000	3000	5000
0,76	Øi220/Øe300	142	400	1"	0,6	5221000061003	✓	✓	✓									✓					
0,94	Øi220/Øe300	142	410	1"	0,54	5221000061002	✓	✓	✓									✓					
1,58	Øi220/Øe300	170	440	1"	1,21	5221000061004	✓	✓	✓									✓					
0,94	Øi300/Øe380	142	410	1"	0,54	5221000061011				✓	✓	✓							✓	✓	✓	✓	
1,58	Øi300/Øe380	170	440	1"	1,21	5221000061012				✓	✓	✓							✓	✓	✓	✓	
2,63	Øi300/Øe380	190	570	1"	2,07	5221000061006				✓	✓	✓							✓	✓	✓	✓	
3,17	Øi300/Øe380	190	665	1"	2,51	5221000061007				✓	✓	✓							✓	✓	✓	✓	
4,54	Øi300/Øe380	190	750	1"1/4	3,6	5221000061008				✓	✓	✓							✓	✓	✓	✓	
3,17	Øi350/Øe430	190	665	1"	2,51	5221000061013							✓	✓	✓	✓	✓						✓
4,54	Øi350/Øe430	190	750	1"1/4	3,6	5221000061014							✓	✓	✓	✓	✓						✓
5,26	Øi350/Øe430	190	850	1"1/4	4,14	5221000061009							✓	✓	✓	✓	✓						✓
6,34	Øi350/Øe430	190	980	1"1/4	5,1	5221000061010							✓	✓	✓	✓	✓						✓

COPPER FINNED AND TINNED HEAT EXCHANGERS *(SPARE PART WITH Ø 300 MM FLANGE)*

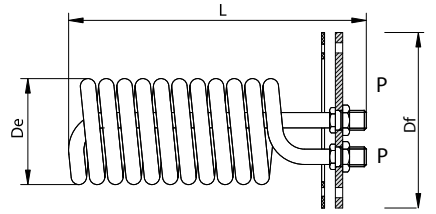

Including flangeplate, gaskets, bolts and user manual.
MAX WORKING PRESSURE: 12 bar
MAX WORKING TEMPERATURE: 110 °C

Suitable for products produced before 05/2019

Copper finned heat exchanger kit + flange plate + gaskets + bolts and insulated bushes.

Heat exchanger surface	Øi / Øe flange	De	L	P	Capacity	Art. Nr.
[m²]	[mm]				[lt]	
2,27	Øi220/Øe300	170	570	1"	1,79	5221000061021
2,63	Øi220/Øe300	190	570	1"	2,07	5221000061022
3,17	Øi220/Øe300	190	665	1"	2,51	5221000061023
4,54	Øi220/Øe300	190	750	1" 1/4	3,60	5221000061024
5,26	Øi220/Øe300	190	850	1" 1/4	4,14	5221000061025
6,34	Øi220/Øe300	190	980	1" 1/4	5,10	5221000061026

ADDITIONAL COPPER FINNED COIL *(AVAILABLE ON BOLLY® ST FB 1 - 2, MODELS 800 AND 1000)*

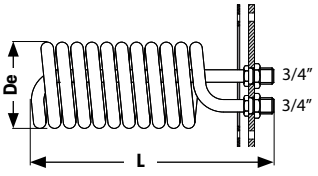

Art. Nr.	Description
5221000910001	Surface=0,94m² - De=145 mm - L=370 mm

Available on Bolly® ST FB 1 - 2 models 800 and 1000.
Including flangeplate (Ø 240 mm), gaskets, bolts and user manual.
MAX WORKING PRESSURE: 12 bar
MAX WORKING TEMPERATURE: 110 °C

ACCESSORIES AND SPARE PARTS CALORIFIERS

EXCHANGER HEAD FOR EXTRA 1,2,3 CALORIFIERS AND VASI STORAGE



Art. Nr.	Connection	Ø outer [mm]
7206211310007	1"	300
7206211310008	2"	380
7206211310003	2"	430

Includes 2 gaskets, bolts and bushes.
Version for pipes heat exchanger.

The Flange plate includes 2 sleeve collars for the connection to the operating system. This allows the circulation of the liquid within the heat exchanger's serpentine doing the real separation between the incoming liquid and the outgoing one. The flange plate is in mild steel. Blind flange for accumulation tank in Polywarm® available also with 1 connection. Including: gaskets, bolts and bushes

FLANGE PLATE FOR D.H.W. STORAGE TANKS POLYWARM® *(POLYWARM®)*



Art. Nr.	Connection	Ø outer [mm]
7206211500013	1"1/2	300
7206211500014	1"1/2	380
7206000910013	1"1/2	430
7206211500011	2"	380
7206000910009	2"	430

Includes 1 gasket and bolts
1 connection for electric immersion heater (available on storage tanks)



Art. Nr.	Ø outer [mm]
7206211500015	300
7206211500016	380
7206211500017	430

Includes 1 gasket and bolts
Blind flange available (available on storage tanks)

GASKET FOR FLANGE PLATE

PAIR OF GASKET FOR EXTRA CALORIFIERS



Art. Nr.	Ø outer [mm]
7021220401001	300
7021220401002	380
7021220401003	430

One gasket with crosspiece and one without. Silicone gaskets suitable for water intended for human consumption (tested according to 98/83/CE), max temperature up to 200°C. Bolts and bushes included.

PAIR OF GASKET FOR EXTRA STEAM CALORIFIERS



Art. Nr.	Ø outer [mm]
7021220460111	300
7021220460112	380
7021220460113	430

One gasket with crosspiece and one without.
Made in material for max. temperature up to 192°C. Bolts and bushes included.

PAIR OF GASKET FOR EXTRA PLUS CALORIFIERS - VASI STORAGE



Art. Nr.	Units box	Ø outer [mm]
7021220401013	5 pcs	300
7021220401016	10 pcs	380
7021220401015	10 pcs	430

Art. Nr.	single unit	Ø outer [mm]
7021361450017		300
7021361450019		380
7021361450021		430

One gasket with crosspiece and one without. Silicone gaskets suitable for water intended for human consumption (tested according to 98/83/CE), max temperature up to 200°C. Bolts and bushes included.

PAIR OF GASKET FOR BOLLY® POLYWARM® (800 - 1000) / VASI INERZIALI INOX AND POLYWARM® > 1000



Art. Nr.	Units box	Ø outer [mm]
7021220401012	5 pcs	240

Art. Nr.	single unit	Ø outer [mm]
7021361450009		240

One gasket with crosspiece and one without.
Silicone gaskets suitable for water intended for human consumption (tested according to 98/83/CE), max temperature up to 200°C. Bolts and bushes included.

Pair of gasket for BOLLY® POLYWARM® (150÷500) / COMBI



Art. Nr.	Units box	Ø outer [mm]
7021220401011	5 pcs	190

Art. Nr.	single unit	Ø outer [mm]
7021361450008		240

One gasket with crosspiece and one without. Silicone gaskets suitable for water intended for human consumption (tested according to 98/83/CE), max temperature up to 200°C. Bolts and bushes included.

FLANGE PLATE WITH CONNECTION FOR ELECTRIC IMMERSION HEATER *(AVAILABLE ON BOLLY® 1 - 2 -VASO INERZIALE)*

Electric immersion heater flange plate - Kit includes bolts, bushes and user manual.



Art. Nr.	**POLYWARM® VERSION**
7122210215017	Flange ø 190mm for electric immersion heater 1" 1/2 + gasket (Bolly® 150÷500)
7121210215052	Flange ø 190mm for electric immersion heater 2" + gasket (Bolly® 150÷500)
7122210215048	Flange ø 240mm for electric immersion heater 1" 1/2 + gasket (Bolly® 800÷1000) (Vaso inerziale W >1000)
7122210215045	Flange ø 240mm for electric immersion heater 2" + gasket (Bolly® 800÷1000) (Vaso inerziale W >1000)
7206211500014	Flange ø 380mm for electric immersion heater 1" 1/2" + gasket (Bolly® 1500)
7206211500011	Flange ø 380mm for electric immersion heater 2" + gasket
7206000910009	Flange ø 430mm for electric immersion heater 2" + gasket



Art. Nr.	**POLYWARM® VERSION**
7206211500022	Flange ø 380 mm for electric immersion heater G 1" 1/2 with eccentric sleeve + gasket (Bolly® 1500)
7206211500023	Flange ø 380 mm for electric immersion heater G 2" with eccentric sleeve + gasket (Bolly® 1500)
7206211500024	Flange ø 380 mm for electric immersion heater G 2" 1/2 with eccentric sleeve + gasket (Bolly® 1500)



Art. Nr.	**STAINLESS STEEL 316L VERSION**
7122010210018	Flange ø 190mm for electric immersion heater 1" 1/2 + gasket (Bolly® 150÷1000)
7122010210020	Flange ø 190mm for electric immersion heater 2" + gasket (Bolly® 150÷1000)
7122010210015	Flange ø 240mm for electric immersion heater 1" 1/2 + gasket (Bolly® 1500÷2000) (Vaso inerziale X >1000)
7122010210023	Flange ø 240mm for electric immersion heater 2" + gasket (Bolly® 1500÷2000) (Vaso inerziale X >1000)

5 CONNECTIONS COUNTERFLANGE *(AVAILABLE ON COMBI)*



Art. Nr.	**POLYWARM® VERSION**
7121210215067	Flange ø 180mm with 5 connections



Art. Nr.	**STAINLESS STEEL 316L VERSION**
7121110210002	Flange ø 180mm with 5 connections

ACCESSORIES AND SPARE PARTS HYDRONIC SYSTEMS

RECIRCULATION KIT FOR MACS® ELECTRONIC MODULE



Art. Nr.

5221000000073

DHW recirculation group

The recirculation kit for Electronic MACS® module allows the implementation of a sanitary recirculation ring on the system where modules are installed.
The main advantage of such sanitary recirculation ring is to improve comfort and speed in achieving and enjoying the desired DHW temperature, reducing energy waste.
The control unit included as standard with electronic MACS® modules allow the complete management of all settings of the recirculation ring, such as temperature, setting etc...

RECIRCULATION KIT FOR PUFFERMAS® DOMUS



Art. Nr.

5221000000102

DHW recirculation group

The use of Cordivari's recirculation kit allows to manage on the system a link of the DHW recirculation.
The benefit is to improve the comfort of the user and to reduce the waste and produce DHW immediately at the right temperature.

PIASTRATERM® - PADDLE FLOW SWITCH

NEW



The movement of the fluid actuates the flow switch paddle, which immediately detects the flow rate and triggers the start of the circulation pump. The activation of the pump thus enables heat exchange within the module, ensuring optimal transfer and a continuous supply of hot water.

Available on:	Art. Nr.	Connections M
SLB 30 - SLB 40	5601000050001	1"

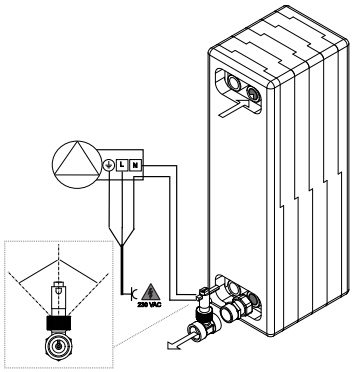

PHC EXCHANGERS - INSULATION KIT



INSULATION:
with practical velcro closure for quick and easy assembly / disassembly; made in closed cell expanded cross-linked polymeric material with low thermal conductivity.
Fire reaction class B2 (DIN 4102)

Description	Suitable for	Nr. of plates	Art. Nr.
Kit coib. PHC	**PHC 2030**	up to 31	5655000610028
Kit coib. PHC	**PHC 2030**	from 33 to 67	5655000610029
Kit coib. PHC	**PHC 2045**	up to 31	5655000610030
Kit coib. PHC	**PHC 2045**	from 33 to 67	5655000610031
Kit coib. PHC	**PHC 2075**	up to 31	5655000610032
Kit coib. PHC	**PHC 2075**	from 33 to 67	5655000610033
Kit coib. PHC	**PHC 3080**	up to 51	5655000610034
Kit coib. PHC	**PHC 3080**	from 53 to 155	5655000610035
Kit coib. PHC	**PHC 3080**	from 157 to 205	5655000610027
Kit coib. PHC	**PHC 30120**	up to 103	5655000610019
Kit coib. PHC	**PHC 30120**	from 105 to 205	5655000610020
Kit coib. PHC	**PHC 4060**	up to 103	5655000610021
Kit coib. PHC	**PHC 4060**	from 105 to 205	5655000610022
Kit coib. PHC	**PHC 4090**	up to 103	5655000610023
Kit coib. PHC	**PHC 4090**	from 105 to 205	5655000610024
Kit coib. PHC	**PHC 40125**	up to 103	5655000610025
Kit coib. PHC	**PHC 40125**	from 105 to 205	5655000610026
Kit coib. PHC	**PHC 45120**	up to 69	5655000610036
Kit coib. PHC	**PHC 45120**	from 71 to 115	5655000610037

ACCESSORIES AND SPARE PARTS HYDRONIC SYSTEMS

PIASTRATERM® - PROTECTIVE CASING



Casing in sheet metal with a special anti-corrosion treatment ensuring strength and long-term durability.

Art. Nr.	
7000450010001	Protective casing forPIASTRATERM® **SLB30**
7000450010002	Protective casing forPIASTRATERM® **SLB40**
7000450010003	Protective casing forPIASTRATERM® **SLB90**

PHC - STAINLESS STEEL 316L PLATES SPARE PARTS



Description	Suitable for	Art. Nr.
Nr. 2 plates in stainless steel 316L	**PHC 2030**	7250110000154
Nr. 2 plates in stainless steel 316L	**PHC 2045**	7250110000130
Nr. 2 plates in stainless steel 316L	**PHC 2075**	7250110000132
Nr. 2 plates in stainless steel 316L "**H**" model	**PHC 3080**	7250110000134
Nr. 2 plates in stainless steel 316L "**L**" model	**PHC 3080**	7250110000135
Nr. 2 plates in stainless steel 316L "**H**" model	**PHC 30120**	7250110000138
Nr. 2 plates in stainless steel 316L "**L**" model	**PHC 30120**	7250110000139
Nr. 2 plates in stainless steel 316L "**H**" model	**PHC 4060**	7250110000142
Nr. 2 plates in stainless steel 316L "**L**" model	**PHC 4060**	7250110000143
Nr. 2 plates in stainless steel 316L "**H**" model	**PHC 4090**	7250110000146
Nr. 2 plates in stainless steel 316L "**L**" model	**PHC 4090**	7250110000147
Nr. 2 plates in stainless steel 316L "**H**" model	**PHC 40125**	7250110000150
Nr. 2 plates in stainless steel 316L "**L**" model	**PHC 40125**	7250110000151
Nr. 2 plates in stainless steel 316L "**H**" model	**PHC 40120**	7250110000156
Nr. 2 plates in stainless steel 316L "**L**" model	**PHC 40120**	7250110000158

PHC EXCHANGERS - SUPPORTING FEET



Supporting feet for PHC exchanger

Suitable for	Art. Nr.
PHC 2030	5601000030002

PHC EXCHANGERS - GASKETS

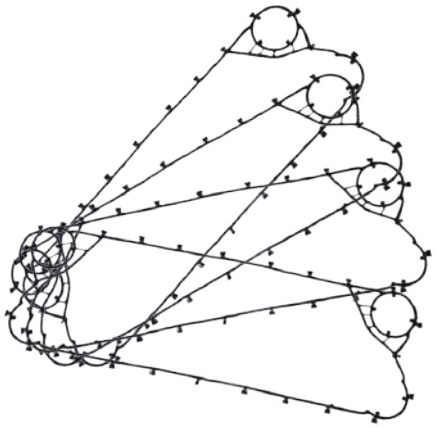

Description	Suitable for	Art. Nr.
NBR gaskets - 10 units box	**PHC 2030**	5019220401023
EPDM gaskets - 10 units box	**PHC 2030**	5019220401024
NBR gaskets - 10 units box	**PHC 2045**	5019220401025
EPDM gaskets - 10 units box	**PHC 2045**	5019220401026
NBR gaskets - 10 units box	**PHC 2075**	5019220401027
EPDM gaskets - 10 units box	**PHC 2075**	5019220401028
NBR gaskets - 14 units box	**PHC 3080**	5019220401029
EPDM gaskets - 14 units box	**PHC 3080**	5019220401030
NBR gaskets - 14 units box	**PHC 30120**	5019220401031
EPDM gaskets - 14 units box	**PHC 30120**	5019220401032
NBR gaskets - 14 units box	**PHC 4060**	5019220401033
EPDM gaskets - 14 units box	**PHC 4060**	5019220401034
NBR gaskets - 14 units box	**PHC 4090**	5019220401035
EPDM gaskets - 14 units box	**PHC 4090**	5019220401036
NBR gaskets - 14 units box	**PHC 40125**	5019220401037
EPDM gaskets - 14 units box	**PHC 40125**	5019220401038
NBR gaskets - 14 units box	**PHC 40120**	5019220401039
EPDM gaskets - 14 units box	**PHC 40120**	5019220401040

PRESSURE VESSELS VISUAL LEVEL INDICATOR



The level indicator includes: transparent tube, two brass faucets and gaskets.

Art. Nr.	Pressure vessel model	Tube length [m]
5303000000040	From 100 to 2500 (stainless steel 1000 and 2000 excluded)	1
5303000000041	From 3000 to 5000 (stainless steel 1000 and 2000 included)	2
5303000000042	> 5000 on request	3

SAFETY VALVES FOR COMPRESSED AIR RECEIVERS

Applied to compressed air and liquid lift tanks prevent the maximum working pressure from being exceeding the limits of designed conditions. The choice of the safety valve should be assessed, in addition to the maximum pressure, in relation to the discharge flow rate and is therefore closely linked to the origin of the system of which the tank is part of and the causes which may lead to the intervention of such devices For these reasons, the choice of the safety valve to be used is the responsibility of the system designer.All safety valves supplied are accompanied by an EC certificate of conformity issued by a notified body and their installation is regulated by the national regulations on pressure equipment in force.



Art. Nr.	UNITS BOX	Connection	Calibration [Bar]
5302000001001	5 pcs	3/8"	4,6
5302000001002		3/8"	5,6
5302000001003		3/8"	7,4
5302000001004		3/8"	9,3
5302000001005		3/8"	10,4
5302000001006		3/8"	11,2
5302000001010	3 pcs	3/4"	4,6
5302000001011		3/4"	5,6
5302000001012		3/4"	7,4
5302000001013		3/4"	10,4
5302000001014		3/4"	11,2
5302000000012	1 pcs	1"	5,6
5302000000007		1"	7,4
5302000000016		1"	10,4
5302000000008		1"	11,2

Art. Nr.	Description	Connection	Calibration [Bar]
5302000001017	single unit	3/8"	7,4
5302000001018		3/8"	11,2
5302000001019		3/4"	7,4
5302000001020		3/4"	11,2

ELASTIC EPDM MEMBRANE

The elastic membrane in EPDM use are mounted on expansion vessels in order to divide the liquid from the gaseous phase. Doing so the circulating water is pure giving to the system the warranty to be suitable for drinking.



Art. Nr.	UNITS BOX	Description
7700000410106	10 pcs	for vessel of 24 litres
7700000410107	5 pcs	for vessel of 100 litres with flange Ø137 mm
7700000410108	5 pcs	for vessel of 50-60 litres
7700000410109	5 pcs	for vessel of 80 litres

Art. Nr.	Description	Description
7700001340001	single unit	for vessel of 200-300 litres
7700001340002		for vessel of 500 litres
7700001340006		for vessel of 24 litres
7700001340004		for vessel of 50-60 litres
7700001340005		for vessel of 80 litres
7700001340003		for vessel of 100 litres with flange Ø137 mm

ACCESSORIES AND SPARE PARTS WATER PRESSURE TANKS

SURCHARGE FOR MANHOLE AND HANDHOLE *(FOR COMPRESSED AIR RECEIVERS P.E.D. 2014/68/UE)*

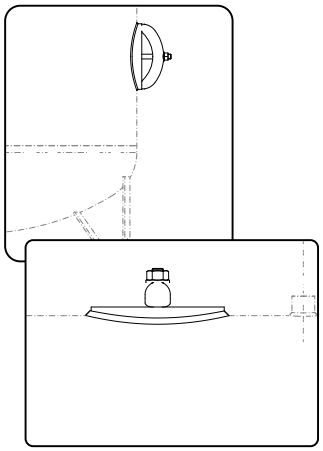

Model	Working Pressure [bar]	Manhole (elliptical) H5 [mm]	Manhole (elliptical) 9 [mm]	Handole (elliptical) H5 [mm]	Handole (elliptical) 9 [mm]
1500	8	860	400x300	818	150x100
2000		890	400x300	845	150x100
3000		985	400x300	985	150x100
4000 (*)		1010	400x300	1010	150x100
5000 (*)		1010	400x300	1010	150x100
8000		//	//	1150	150x100
10000		//	//	1150	150x100
1000	12	//	//	840	150x100
1500		860	400x300	818	150x100
2000		890	400x300	845	150x100
2500		985	400x300	985	150x100
3000		985	400x300	985	150x100
4000 (*)		1010	400x300	1010	150x100
5000 (*)		1010	400x300	1010	150x100
8000		//	//	1150	150x100
10000		//	//	1150	150x100
1000	15	870		840	150x100
1500		860	400x300	818	150x100
2000		890	400x300	845	150x100

(*) Manhole standard on 4000 - 5000 lt Polywarm® version

SURCHARGE FOR MANHOLE AND HANDHOLE *(FOR PRESSURIZED WATER TANKS P.E.D. 2014/68/UE)*

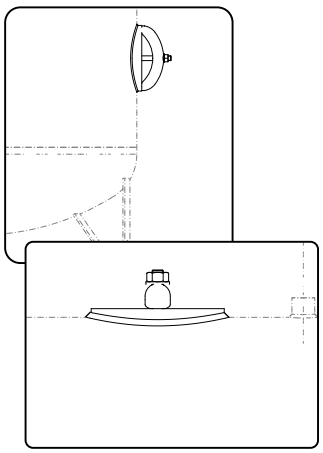

Model	Working Pressure [bar]	Manhole (elliptical) H6 [mm]	Manhole (elliptical) E [mm]	Handole (elliptical) H6 [mm]	Handole (elliptical) E [mm]
1500	8	860	400x300	818	150x100
2000		890	400x300	845	150x100
3000		985	400x300	985	150x100
4000		1010	400x300	1010	150x100
1000	12	//	//	840	150x100
1500		860	400x300	818	150x100
2000		890	400x300	845	150x100
2500		985	400x300	978	150x100
3000		985	400x300	985	150x100

PRESSURE GAUGE



Bottom connection

Instruments installed on pressure equipment to indicate at any time the pressure which the vessel is subjected.
All pressure gauges are supplied with an adjustable indicator for maximum pressure.

Art. Nr.	UNITS BOX	Connection	pressure scale [Bar]
5300000001001	5 pcs	1/4"	0/10
5300000001002	5 pcs	1/4"	0/16

AIR COMPRESSOR RECEIVERS KIT

Includes a safety valve , a gauge (manometer) and its tap-tray.



Right-side connection

Art. Nr.	Description
5303000000001	Kit for 200 up to 710 lt compressed air receivers (11 bar), with security valve of 7.000 l./min P calibration 10,4 bar
5303000000002	Kit for 900 lt compressed air receivers (11 bar), with security valve of 30.000 l./min P calibration 10,4 bar
5303000000003	Kit for 1.000 up to 10.000 lt compressed air receivers (12 bar), with security valve of 32.000 l./min P calibration 11,2 bar
5303000000004	Kit for 1.000 up to 10.000 lt compressed air receivers (8 bar), with security valve of 22.000 l./min P calibration 7,4 bar
5303000000005	Kit for 270 up to 2.000 lt compressed air receivers (15 bar), with security valve of 9.000 l./min P calibration 13,5 bar

INSULATIONS

THERMAL INSULATION

Thermal efficiency of calorifiers and buffer tanks Cordivari is optimized with special insulations, that are essential components for every hot water storage, keeping the temperature stable with low heat loss.
Cordivari insulations reduce at minimum level temperature losses, with consequently energy savings.
Insulation on calorifiers and buffer tanks are manufactured using the best available materials.



NOFIRE® POLYESTER FLEECE

Material with low thermal conductivity. From an energetical and ecological point of view, the polyester fleece is one of the best perfomer, obtained using recycled and environmental friendly material.
The polyester fleece is unalterable at high temperatures, flexible, durable, non-toxic, insensitive to chemicals, it doesn't rot, hygienic and transpiring.
High insulation capacity with a thermal conductivity λ of 0.039 W/mk and a fire resistance class of B-s2d0, according to european standard EN 13501.

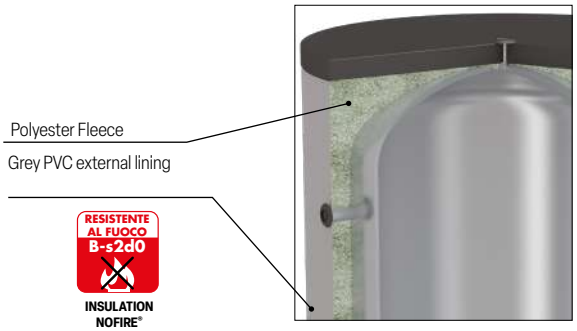



RIGID EXPANDED POLYUERETAN

The term polyurethane refers to a vast family of polymers, which are used for different purposes. In thermo-hydraulics the use of expanded polyurethane as thermal insulation is widespread, since it has excellent insulating properties.
The Cordivari tanks have a thermal insulation of hard polyurethane foam based on the models that differ from each other for different purposes. This layer is foamed directly on the body of the tank, whose surface is treated with a special release agent which facilitates its removal at the end of this technical life. This insulating layer has a high insulating capacity and high polymer density.

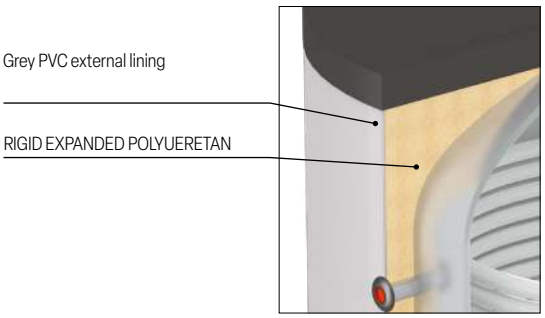



GLASS WOOL INSULATION AND ALUMINIUM EXTERNAL LINING

The D.H.W. Storage Tanks with insulation A1 represents the most advanced solution in terms of preventing fire risks on thermal power plants or technical rooms.
With glass wool and an external lining completely made in Aluminium material, this insulation combines the high thermal insulations properties with a fire proofing resistance class A1, according to european standard EN 13501.

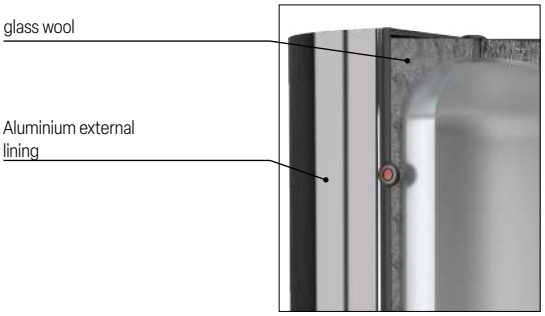

INSULATIONS - FIRE REACTION CLASS (EN 13501)

Fire Reaction			Smoke release			(drops)		
A1	FIRE PROOF		NO TEST REQUIRED			NO TEST REQUIRED		
A2		*Fireproof*	s1		*None*	**d0**		*No in the first 10 minutes*
B		*Limited*	**s2**		*Limited*	d1		*Limited Dripping of incandescent materials in the last 10 seconds*
C		*Decreasing performance levels from C to E reaction class*	s3		*High*			
D						d2		*High*
E			E	NO TEST		E	NO INDICATION or d2	
F	No performance declared							

MATERIALS

All Cordivari Products are manufactured using high level quality of raw materials and internal finishes:

STAINLESS STEEL 316L

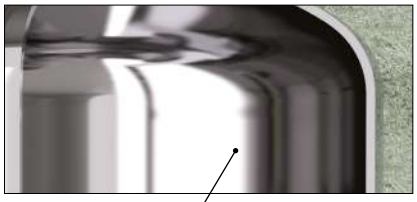





The choice of stainless steel material on calorifiers aims for an absolute quality result. Material with high performances, entirely hygienic and atossic, suitable for Domestic Hot Water, resistant to low and high temperatures, 100% recyclable.

Cordivari is leader in the production of Stainless steel 316L (EN 1.4404) calorifiers with high quality standard levels.

POLYWARM® (INTERNAL COATING)

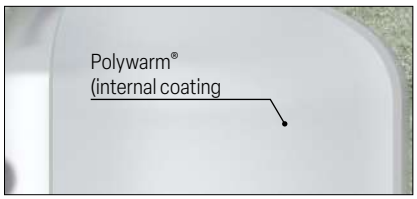

WATER Hygiene AND PROTECTION

- **Drinkability and Hygiene at 100%;**
- **Elasticity E>20%;**
- **Capacities up to 6000 lt;**
- **Temperature resistance till 130°C;**
- **Thickness >200 µm for a total protection to corrosion.**



Our customer oriented approach and our long tradition as cylinder manufacturer allow us to offer cutting edge solutions for production and storage of Domestic Hot Water Cylinders.
Polywarm® properties have passed the adherence tests according to BS3900-E6 and DIN 53151, hardness tests according to ASTM D 3363-74 (matite), Impact resistance test (2 Joule) according to BS3900-E6 and at 10 kg x cm (UNI 8901).
Polywarm® has excelled in chemical and durability testing (>1000 hours) in salt spray testing according to UNI 5687-73 and Humidity cycle according to UNI 8744.
Drinkability and Hygiene at 100%, elasticity E>20%, capacities up to 6000 litres, temperature resistance till 130°C. Thickness >200 µm for a total protection to corrosion.
Polywarm® Hygienic Certifications:

- Certificate of conformity for Domestic Hot Water of organic coating for food uses Polywarm® granted by IPL (Institut Pasteur de Lille - France).
- Test report of internal treatment for food use Polywarm® in accordance with D.M. nr. 174 del 06/04/2004 granted by SSICA Laboratory of Parma - Italy.
- Certificate OFI - Vienna , Austria, according to DVGW W270.
- WRAS - Water Regulation Advisory Scheme certificate

HOT GALVANIZING PROCESS

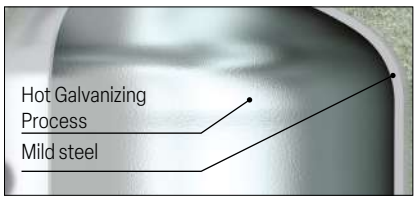





The galvanizing process protects the steel from corrosion, granting a long life product.
Thank to the high temperatures of the treatment, the galvanizing process helps to get better performances.
Cordivari premises are equipped with a high-tech hot galvanizing system.

The tank is dipped in a melted zinc bath (99,99% pure) according to European standard UNI EN 1179, lead percentage 100 times less than the maximal value permitted by D.M. n.174 dated 06/04/2004. Cordivari galvanizing process does not contain dangerous material, so to be certified for D.H.W. use.

HIGH PERFORMANCES ANTI-LEGIONELLA® HEAT EXCHANGER

D.H.W. OPTIMIZED ACCUMULATION

Cordivari Heat Exchanger , with tubes bent to the bottom, are able to heat the complete quantity of water in an homogenous way, also in the lower part of the calorifier. This will ensure total production of the storage of D.H.W. in the calorifier. (10%-15% more than standard heat exchangers). Maximal hygiene will be guaranteed.

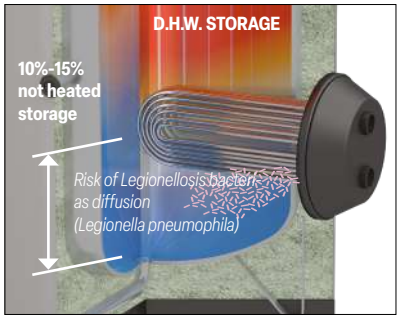

STRAIGHT HEAT EXCHANGER: between 10% - 15% of storage volume is not heated with relevant thermal inefficiencies and risk of Legionellosis bacterias diffusion.

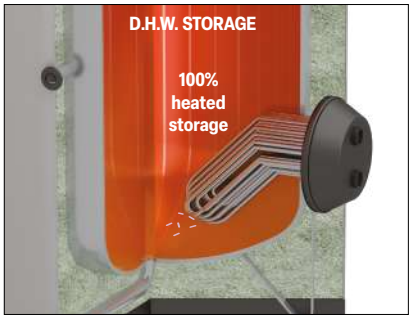

BENDED HEAT EXCHANGER: 100% volume will be heated with relevant thermal efficiency and D.H.W. healthiness increase.



The FULL CONTROL control unit fitted to Cordivari storage tanks also enables the programming of periodic domestic hot water heating cycles, ensuring maximum hygiene.

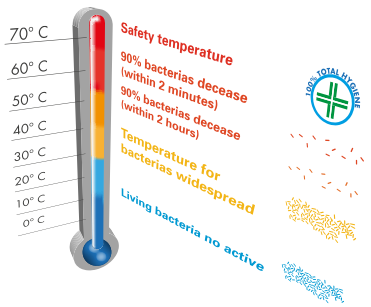

DIMENSIONING OF BUFFER TANKS

The calculation of a buffer tank's volume depends on the type and on the potential of the heat generators. The installation of a buffer tank has a double function, as it allows the generator to work regularly by limiting the number of interruptions, and it also constituts a thermal flywheel for the heating system, improving the overall comfort of the installation. Cordivari offers a wide range of buffer tanks, providing besides the mainstream version also combined solutions ideal for production of domestic hot water. The wide spectrum of products available is characterized by advanced technology that allows a strong thermal stratification, to consistently reduce the energy consumption.

For calculation purposes we give an indication of the volumetric ratios according to the thermal potential of various sources with non-continuous operation. These suggestions and merely indicative and cannot substitute a closer evaluation made by a qualified technician.

HEAT PUMP

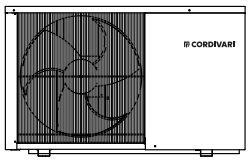

1 KWT-5÷10 LITRES

FIREPLACE STOVE

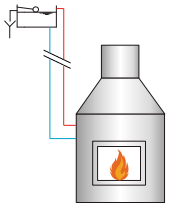

1 KWT-30÷50 LITRES

FLAT SOLAR COLLECTOR



1 MQ-50÷65 LITRES

POLYCOMBUSTIBLE BOILER

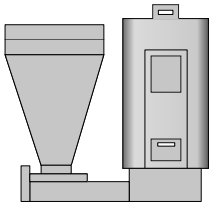

1 KWT-20 LITRES

PELLET STOVE

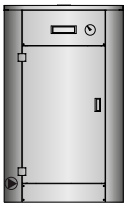

1 KWT-20 LITRES

VACUUM SOLAR COLLECTOR

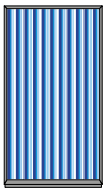

1 MQ-50÷75 LITRES

DIMENSIONING OF THE EXPANSION VESSEL FORCED CIRCULATION SYSTEMS

The expansion vessel has a key function for the primary circuit of a solar thermal system with forced circulation (generally speaking, expansion vessels are important in any heating system). To calculate the nominal volume of the vessel refer to the following formula:

Vn = (Vu•(Pf+1)) / (Pf-Pi)

Where :

VN = nominal volume of the Expansion vessel [lt]
VU = useful volume of the Expansion vessel = Vu = (ΔV + Vc) * 1,1 [lt]
PF = maximum working pressure of the solar thermal system: to be considered in the designing phase of the project according to the characteristics of the materials used and the safety devices installed = 5,5 [bar]
PI = loading pressure of the solar thermal system: linked to the difference in level between solar collectors and expansion vessel (approximately 1 bar each 10 meters) plus a safety coefficient; in domestic systems the cold water loading pressure is about 2,5 [bar].

With:

ΔV = variation of the volume of the fluid = e * Vf [lt]
VC = fluid contained in the solar collectors [lt]
In which:
E = heat transfer fluid coefficient of cubic expansion = 0,07
VF = heat transfer fluid contained in the system

The heat transfer fluid contained in the system is given by the sum of:



fluid content in solar collectors	**VC +**
fluid content in pipes	**VT +**
fluid content in heat exchangers	**VS +**
fluid content in other components	**VA =**
	VF

The preload value of the expansion vessel will be 0,3-0,5 bar less than pressure Pi.

EXAMPLE

SOLAR THERMAL SYSTEM **500B2-10 TF**
- 4 SOLAR COLLECTORS 2,5 MQ
- 1 CALORIFIER BOLLY® 2 500 LT
- 1 BASIC CIRCULATION GROUP
- 30 MT COPPER PIPE (SUPPLY + RETURN) D. 22 MM

To determine the necessary volume of the expansion vessel
VF = (VC +VT+VS+VA) - 31 LITRES
ΔV = EXVF= (0,07*31) = 2,17 LITRES
VU = (ΔV+VC)X1.1= (2,17+3,8)X1,1= 10,75 LITRES
VN = VUX(PF+1)/(PF-PI) = 6,56X(5,5+1)/(5,5-2,5) = 23,30 LITRES → **24 LITERS EXPANSION VESSEL**



THERMAL STRATIFICATION

Thermal stratification is a physical process in which an hot fluid naturally tends to position itself higher than the cold one.

The fluid (water) is always moving, and tends to remix, therefore the natural process of stratification must be supported to maintain an increasing temperature gradient from bottom to upper part and avoid the mixing of liquid at different temperatures.

To allow stratification into the tanks means to create a remarkable difference in temperature storaging volume from upper to lower part. With important positive effects in terms of efficiency.
A proper stratificated storaging means to have quantities of hot water available in short time.
Example of stratification:
Heat received during the day is accumulated in the higher part of the tank, reaching a suitable temperature for end user, while in the lower part temperature remains cold and even when solar collectors have a temperature below the one needed (afternoon-evening), the heat exchanger continues and tanks is storaging further energy.

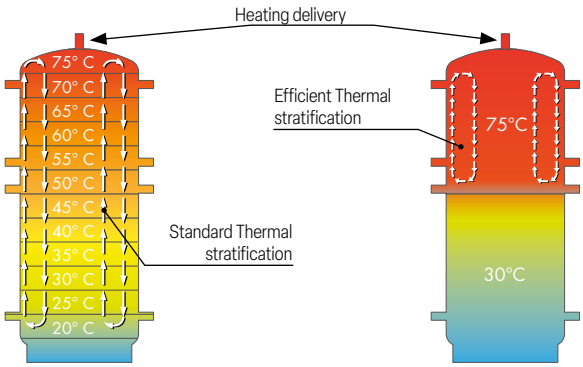

THE TECHNICAL SOLUTIONS FOR THE OPTIMIZATION OF THERMAL STRATIFICATION

"LABYRINTH SPREADER" (CORDIVARI PATENT)



Performances are optimized thanks to the "Labyrinth Spreader" (Cordivari Patent). Its spread shape allows a perfect stratification of the water that returns back from the plate exchange to the tank.
Heating installation efficiency is guaranteed.

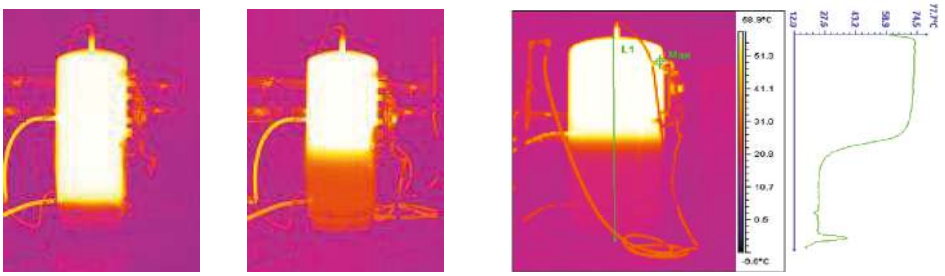

Sequence of thermographic images that show how Labyrinth Spreader works.

EASY STRATIFICATION BUFFERS (CORDIVARI PATENT)

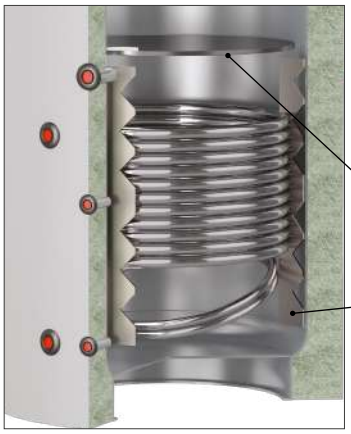

The heating return stratification system (Cordivari patent), avoid any turbolences, that would affect the thermal stratification inside the buffer tank. Thanks to this optimized solution, efficiency and energy savings are continuosly improved.

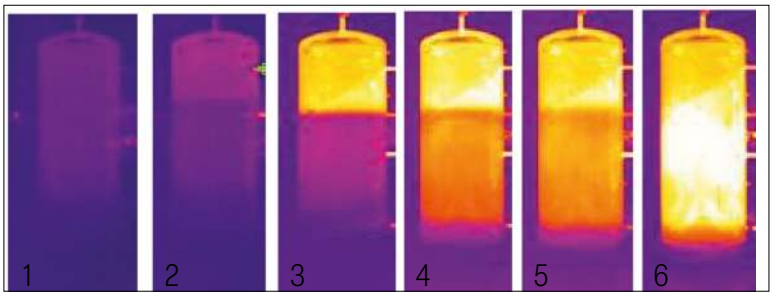

Sequence of thermographic images that show how a system works with the easy stratification Buffer.

BUFFER TANKS CTS®

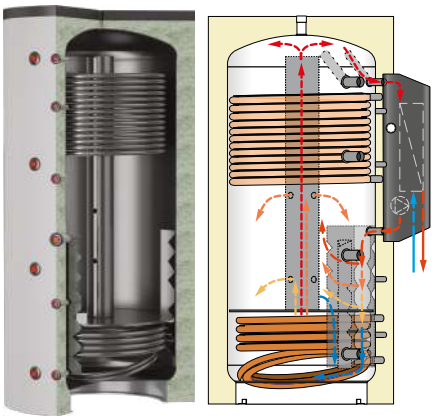

The new range of Buffer Tanks CTS® are Cordivari's last innovative storage tanks designed for Solar Thermal Systems.
The exclusive Stratification device CTS® allows to have a prompt delivery of energy suitable for the production of hot water.
The energy absorbed from the Solar Collectors is efficiently stratified in the upper part of the tank through the CTS® stratification device and separation plate already assembled in Buffer CTS®.
The thermal stratification inside the Buffer tanks will be then improved naturally, without any external valves thanks to the mixed combination of:

1. Labyrinth Spreader that allows a perfect stratification of the water that returns back from user thanks to its spread shape avoiding mixes of temperatures of storaged water
2. Upper thermal loading systems that concentrates in the upper part of the tank hot water produced by the lower solar fixed coil in short time and high temperature.
3. Lower fixed Heat Exchanger designed for an optimal relation between space and efficiency.

EXAMPLES OF INSTALLATION

EXAMPLE OF INSTALLATION WITH **EXTRA 2 VAPORE**

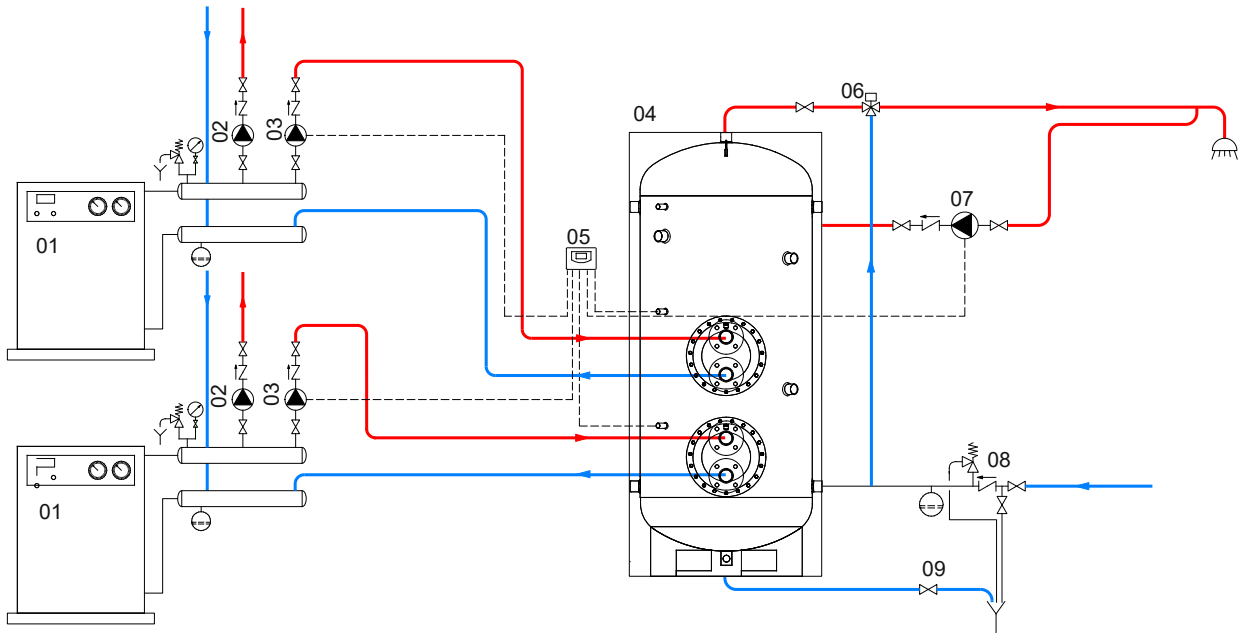

01	Generator	04	EXTRA 2 VAPORE	07	D.H.W. recirculation group
02	Heating system circulation group	05	FULL CONTROL electronic unit /thermostat	08	Hydraulic safety group
03	D.H.W. circulation group	06	Thermostatic mixing valve	09	Blowdown valve

EXAMPLE OF INSTALLATION WITH **BOLLY® 1 HY INOX**

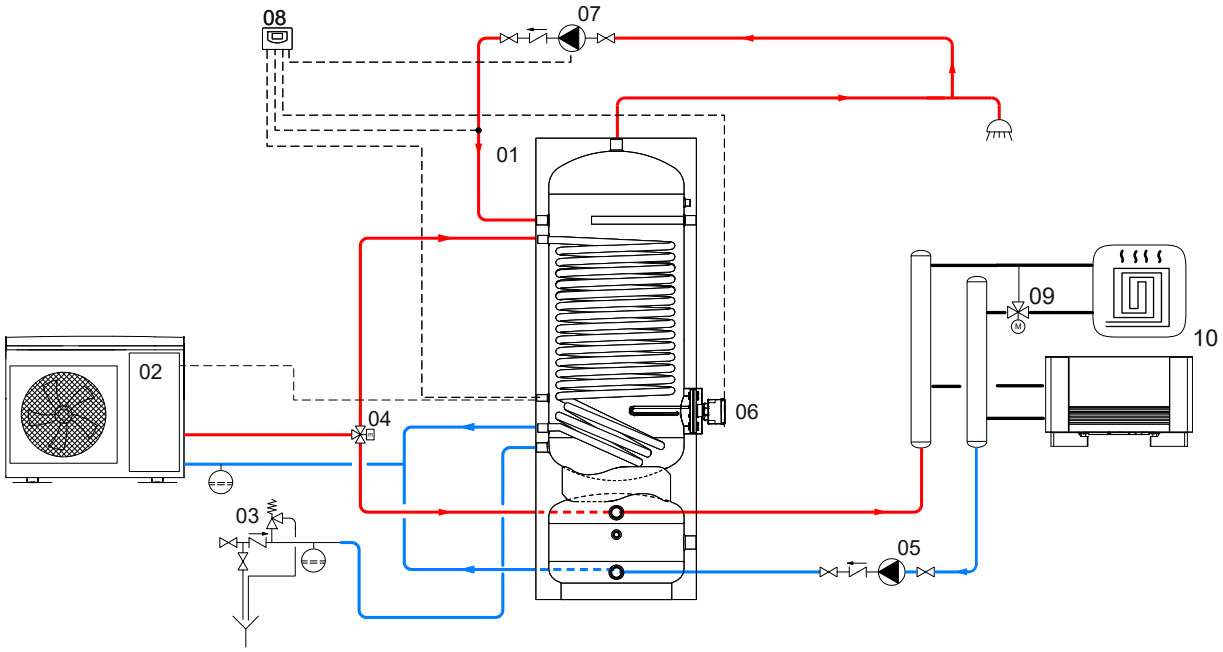

01	BOLLY® HY	04	Motorized 3-way valve	07	D.H.W. recirculation group	10	Heating units
02	Generator (Heat pump)	05	Circulation group for heating/cooling system	08	FULL CONTROL electronic unit / thermostat		
03	Hydraulic safety group	06	Electric immersion heater	09	Thermostatic mixing valve		

The following schemes are purely illustrative. To realize the installation, always refer to a qualified technician.

EXAMPLE OF INSTALLATION WITH **BOLLYTERM® HP NET**

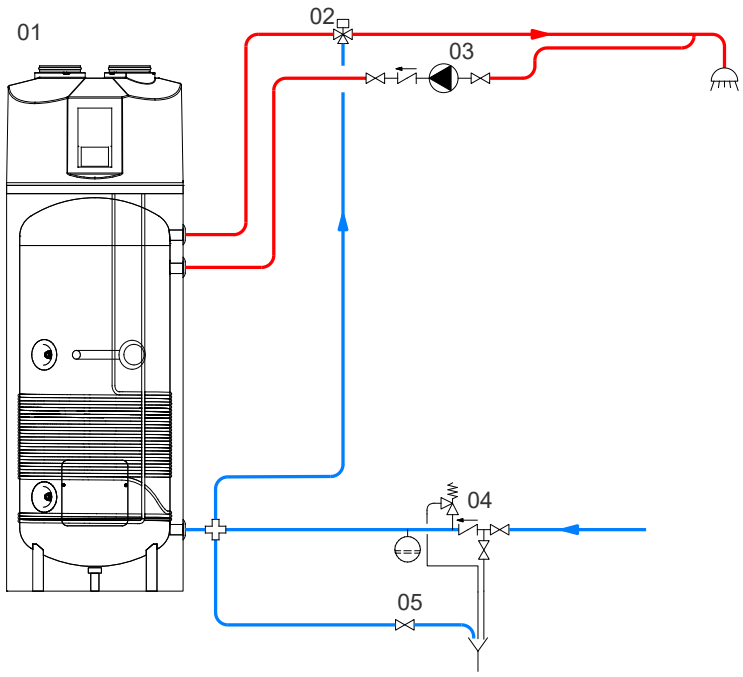

01	BOLLYTERM® HP NET	03	D.H.W. recirculation group	05	Blowdown valve
02	Thermostatic mixing valve	04	Hydraulic safety group		

EXAMPLE OF INSTALLATION WITH **BOLLYTERM® HP 1 NET**

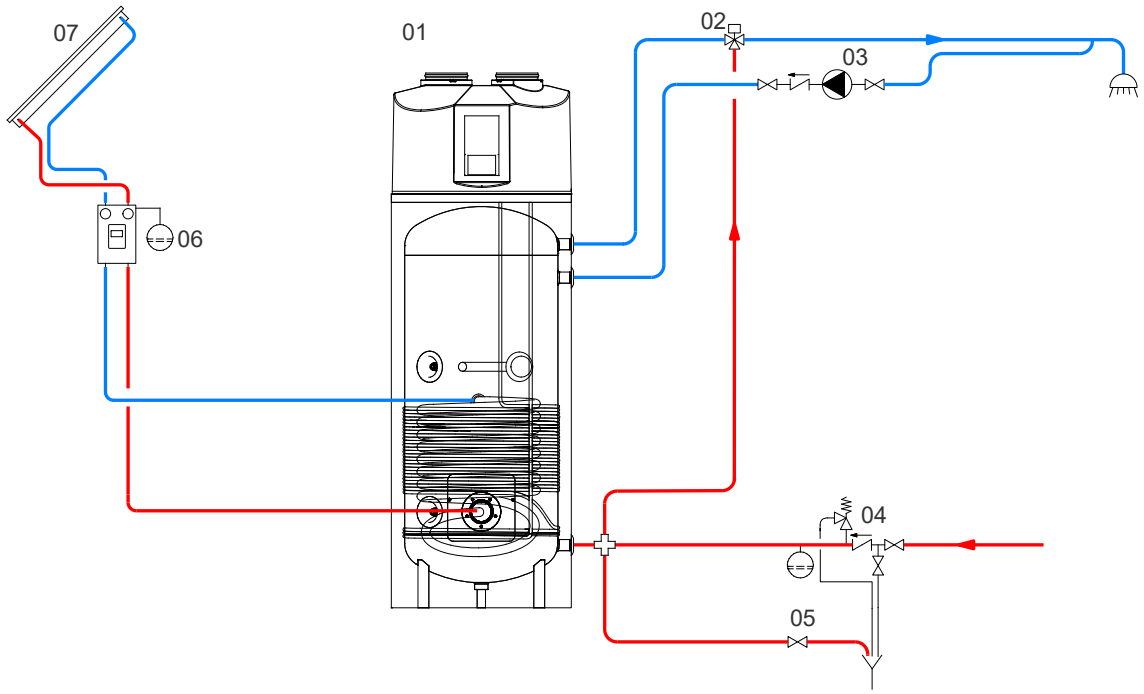

01	BOLLYTERM® HP 1 NET	03	D.H.W. recirculation group	05	Blowdown valve	07	Solar panels
02	Thermostatic mixing valve	04	Hydraulic safety group	06	Solar system circulation group		

The following schemes are purely illustrative. To realize the installation, always refer to a qualified technician.

EXAMPLES OF INSTALLATION

EXAMPLE OF INSTALLATION WITH **BOLLYTERM® HP 2 NET**

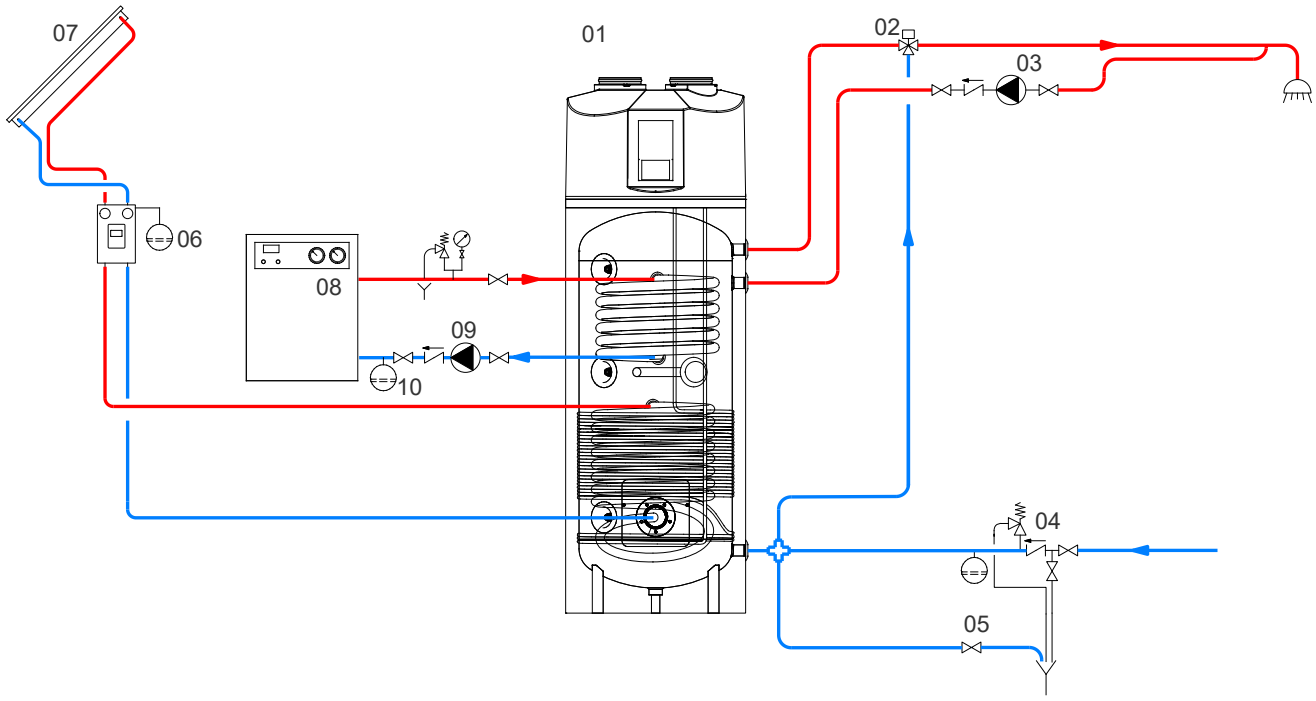

01	BOLLYTERM® HP 2 NET	04	Hydraulic safety group	07	Solar panels	10	Expansion vessel
02	Thermostatic mixing valve	05	Blowdown valve	08	Generator		
03	D.H.W. recirculation group	06	Solar system circulation group	09	Circulation group		

EXAMPLE OF INSTALLATION WITH **BOLLY® 1 PDC**

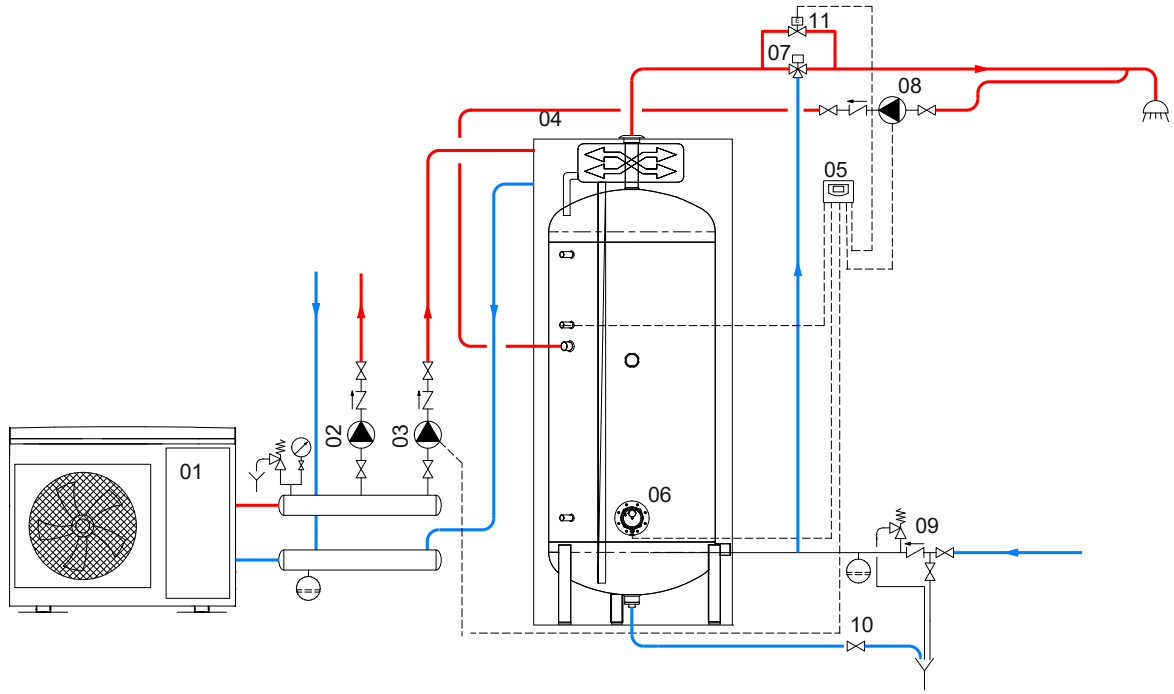

01	Generator (Heat pump)	04	BOLLY® PDC	07	Thermostatic mixing valve	10	Blowdown valve
02	Heating system circulation group	05	FULL CONTROL electronic unit / thermostat	08	D.H.W. recirculation group	11	By-pass solenoid valve
03	D.H.W. circulation group	06	Electric immersion heater (optional)	09	Hydraulic safety group		

The following schemes are purely illustrative. To realize the installation, always refer to a qualified technician.

EXAMPLE OF INSTALLATION WITH **PUFFER**

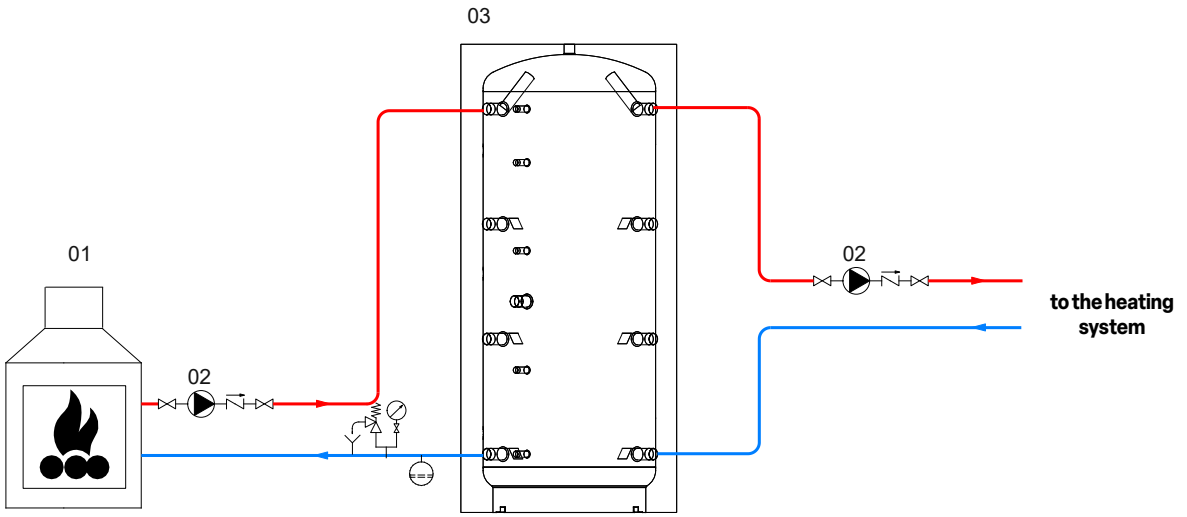

01	Generator	02	Heating system circulation group	03	PUFFER

EXAMPLE OF INSTALLATION WITH **PUFFER 1**

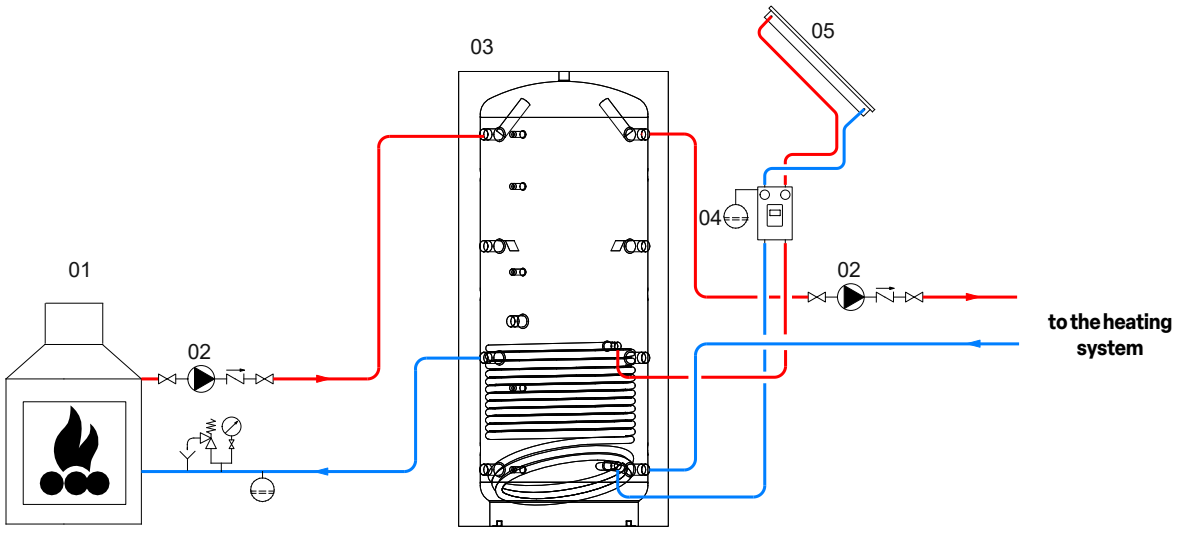

01	Generator	03	Puffer 1	05	Solar panels
02	Heating system circulation group	04	Solar system circulation group		

The following schemes are purely illustrative. To realize the installation, always refer to a qualified technician.

EXAMPLES OF INSTALLATION

EXAMPLE OF INSTALLATION WITH **PUFFER 2**

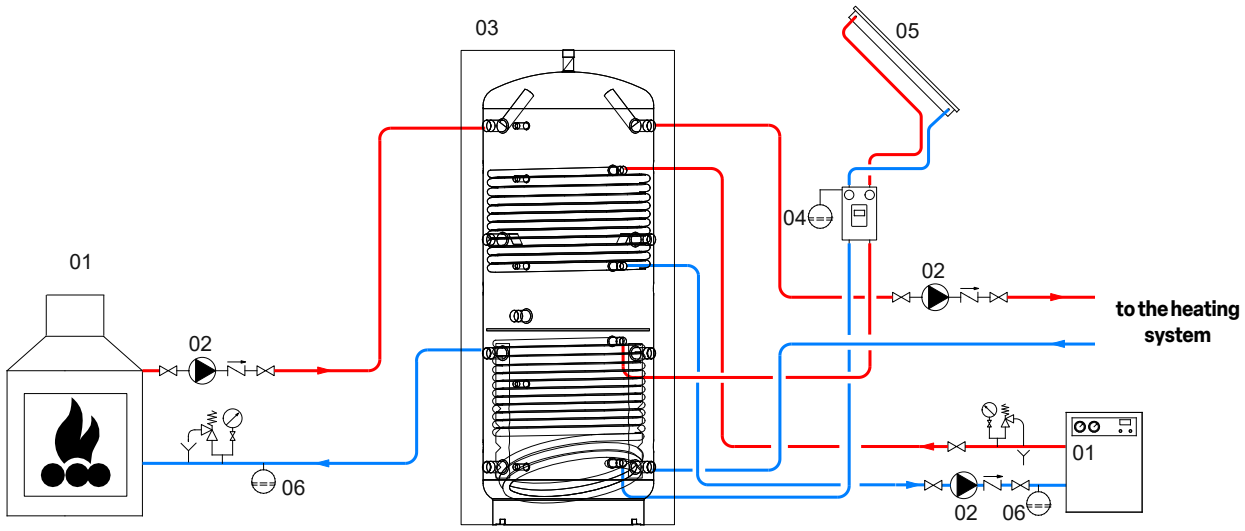

01	Generator	03	PUFFER 2	05	Solar panels
02	Heating system circulation group	04	Solar system circulation group	06	Expansion vessel

EXAMPLE OF INSTALLATION WITH **PUFFER 1 CTS® CONNECTED AND CASCADE MACS® MODULES**

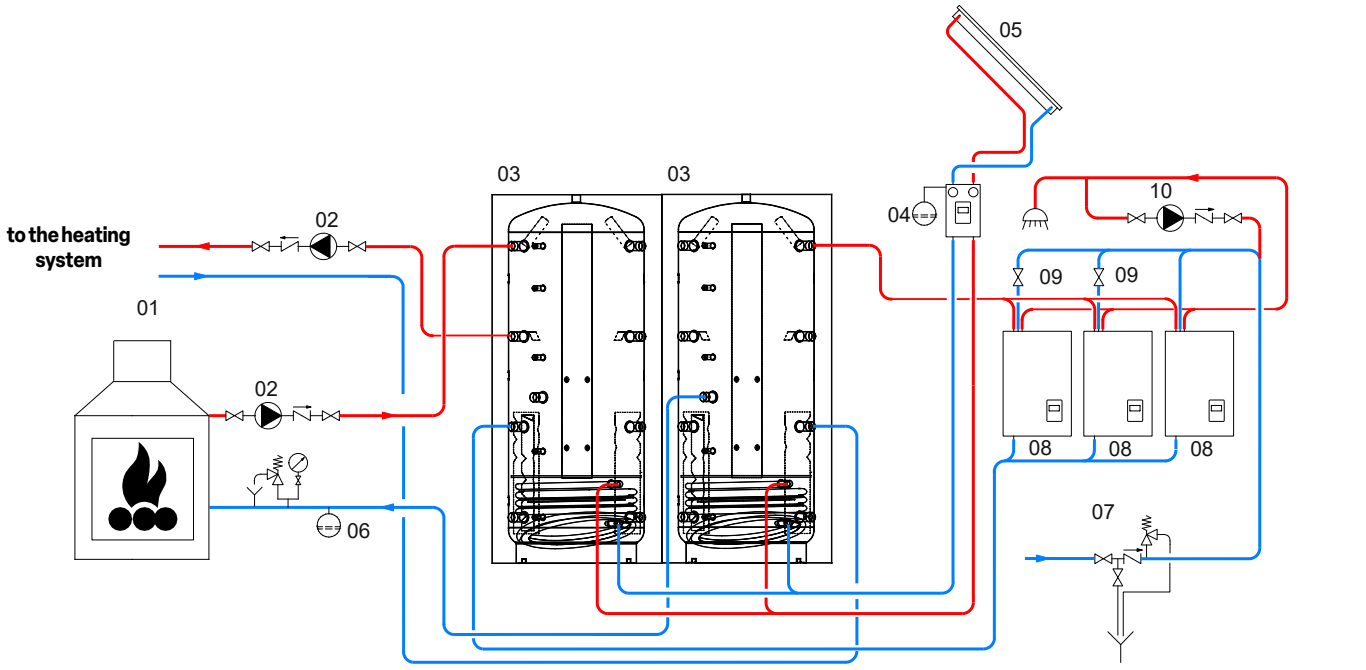

01	Generator	04	Solar system circulation group	07	Hydraulic safety group	10	D.H.W. recirculation group
02	Heating system circulation group	05	Solar panels	08	CASCADE MACS® MODULES		
03	PUFFER® 1 CTS	06	Expansion vessel	09	Solenoid valve		

The following schemes are purely illustrative. To realize the installation, always refer to a qualified technician.

EXAMPLE OF INSTALLATION WITH **COMBI 1**

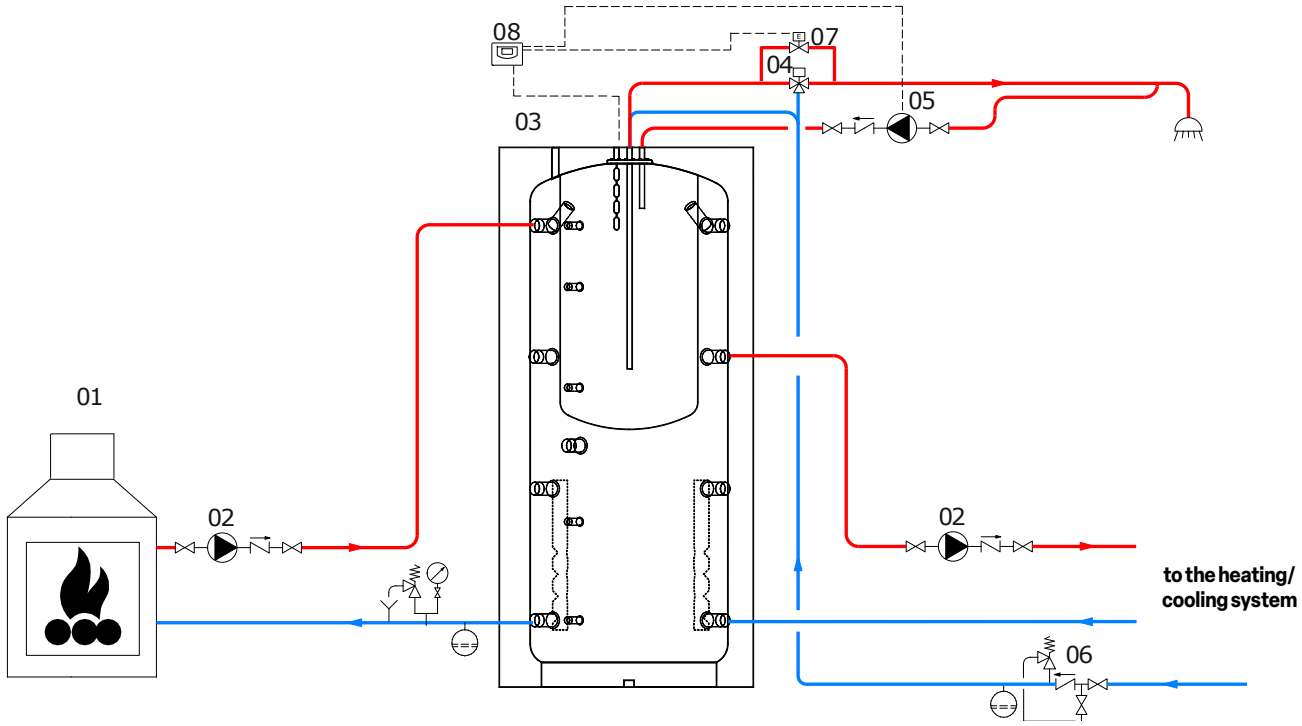

01	Generator	03	COMBI 1	05	D.H.W. recirculation group
02	Heating system circulation group	04	Thermostatic mixing valve	06	Hydraulic safety group

EXAMPLE OF INSTALLATION WITH **COMBI 3**

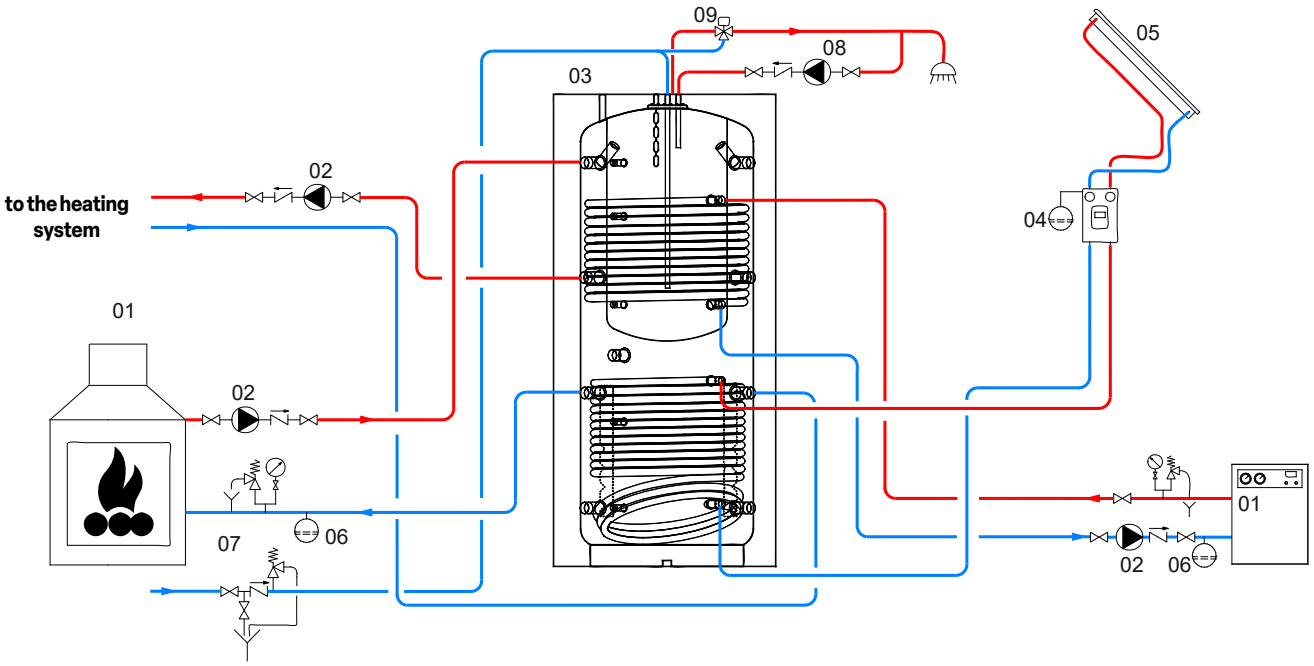

01	Generator	04	Solar system circulation group	07	Hydraulic safety group
02	Heating system circulation group	05	Solar panels	08	D.H.W. recirculation group
03	COMBI 3	06	Expansion vessel	09	Thermostatic mixing valve

The following schemes are purely illustrative. To realize the installation, always refer to a qualified technician.

EXAMPLES OF INSTALLATION

EXAMPLE OF INSTALLATION WITH **ECO-COMBI 2**

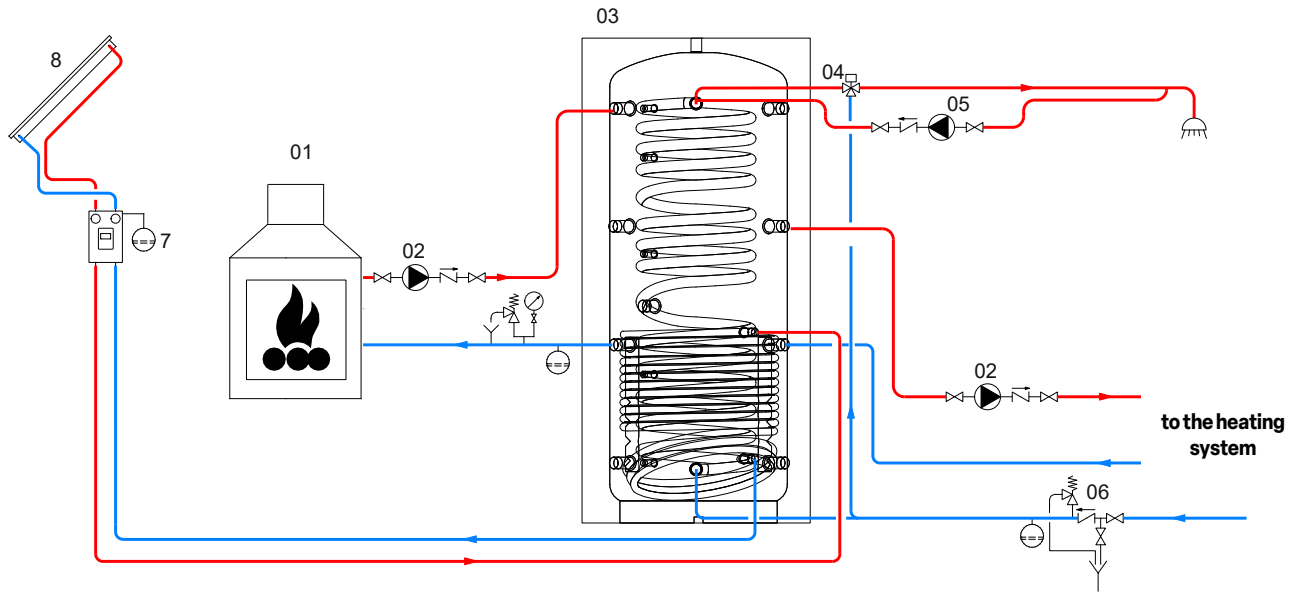

01	Generator	03	ECO COMBI 2	05	D.H.W. recirculation group	07	Solar system circulation group
02	Heating system circulation group	04	Thermostatic mixing valve	06	Hydraulic safety group	08	Solar panels

EXAMPLE OF INSTALLATION WITH **PUFFERMAS® 2**

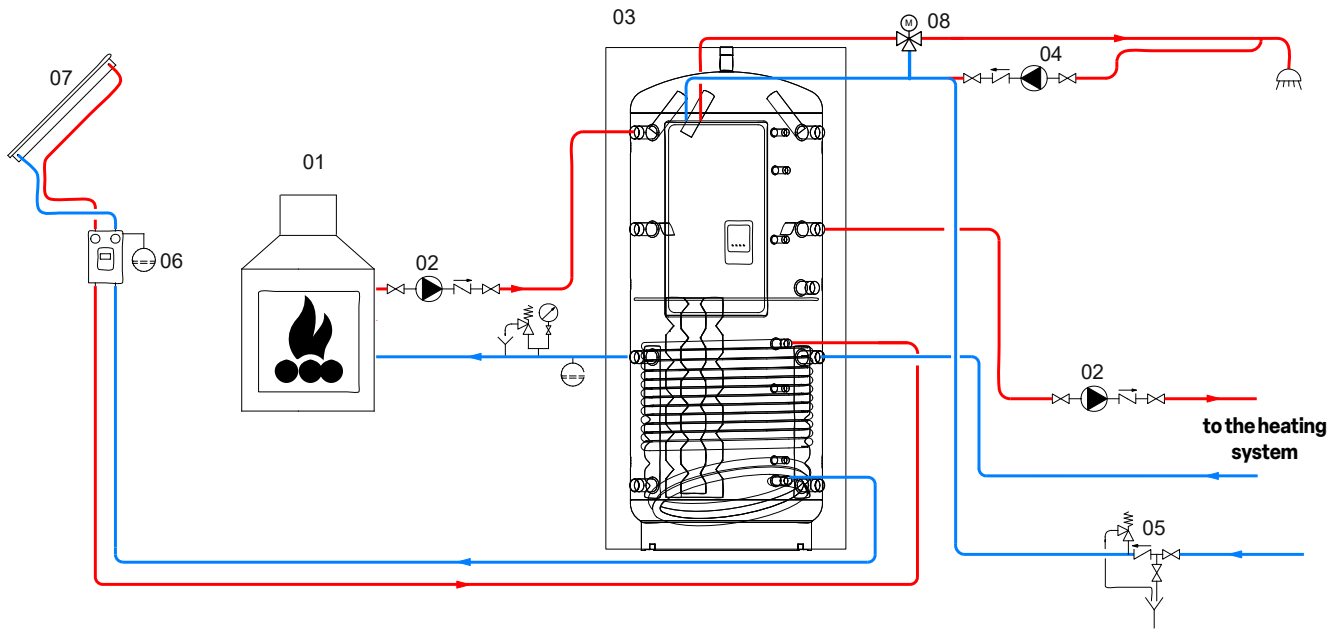

01	Generator	03	PUFFERMAS® 2	05	Hydraulic safety group	07	Solar panels
02	Heating system circulation group	04	D.H.W. recirculation group	06	Solar system circulation group	08	Thermostatic mixing valve

The following schemes are purely illustrative. To realize the installation, always refer to a qualified technician.

EXAMPLE OF INSTALLATION WITH **PUFFERMAS® 3 CTS** AND **CHILLED WATER TANK**

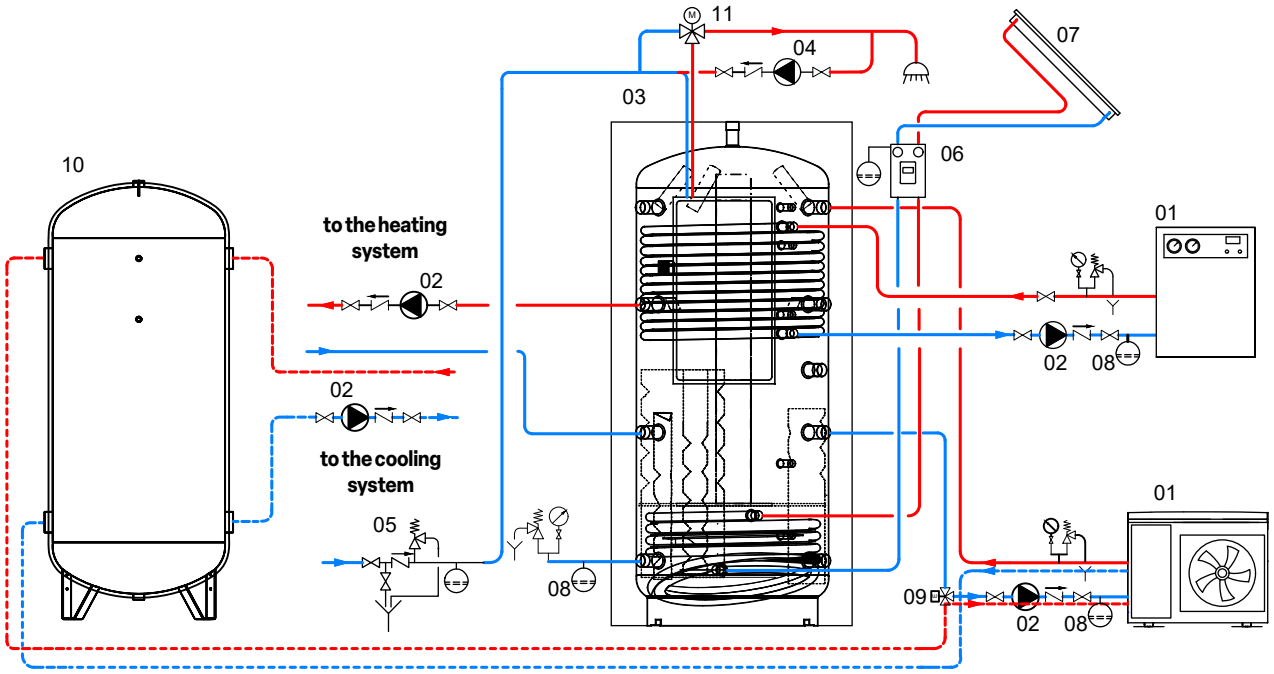

01	Generator	04	D.H.W. recirculation group	07	Solar panels	10	CHILLED WATER TANK
02	Heating system circulation group	05	Hydraulic safety group	08	Expansion vessel	11	Thermostatic mixing valve
03	PUERRMAS® 3	06	Solar system circulation group	09	Solenoid valve		

EXAMPLE OF INSTALLATION WITH **ECO-COMBI 3 PDC**

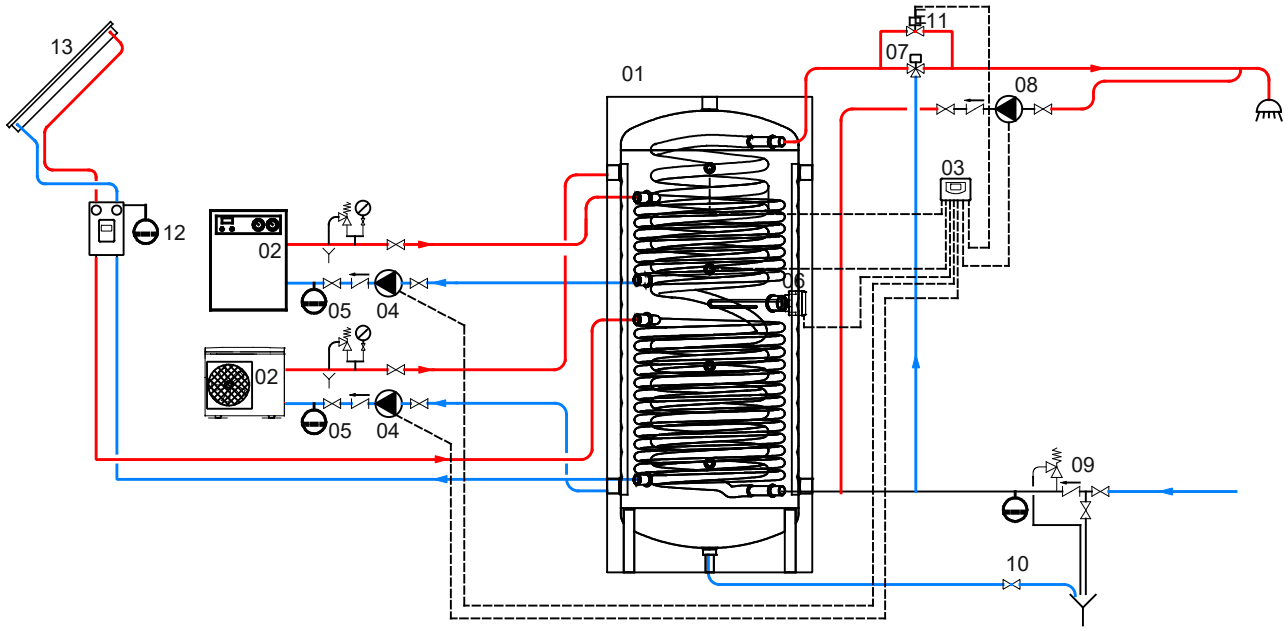

01	ECO COMBI 3 PDC	05	Expansion vessel	09	Hydraulic safety group	13	Solar panels
02	Generator	06	Electric immersion heater (optional)	10	Blowdown valve		
03	FULL CONTROL electronic unit / thermostat	07	Thermostatic mixing valve	11	By-pass solenoid valve		
04	Circulation group	08	D.H.W. recirculation group	12	Solar system circulation group		

The following schemes are purely illustrative. To realize the installation, always refer to a qualified technician.

EXAMPLES OF INSTALLATION

EXAMPLE OF INSTALLATION WITH **PIASTRATERM®**

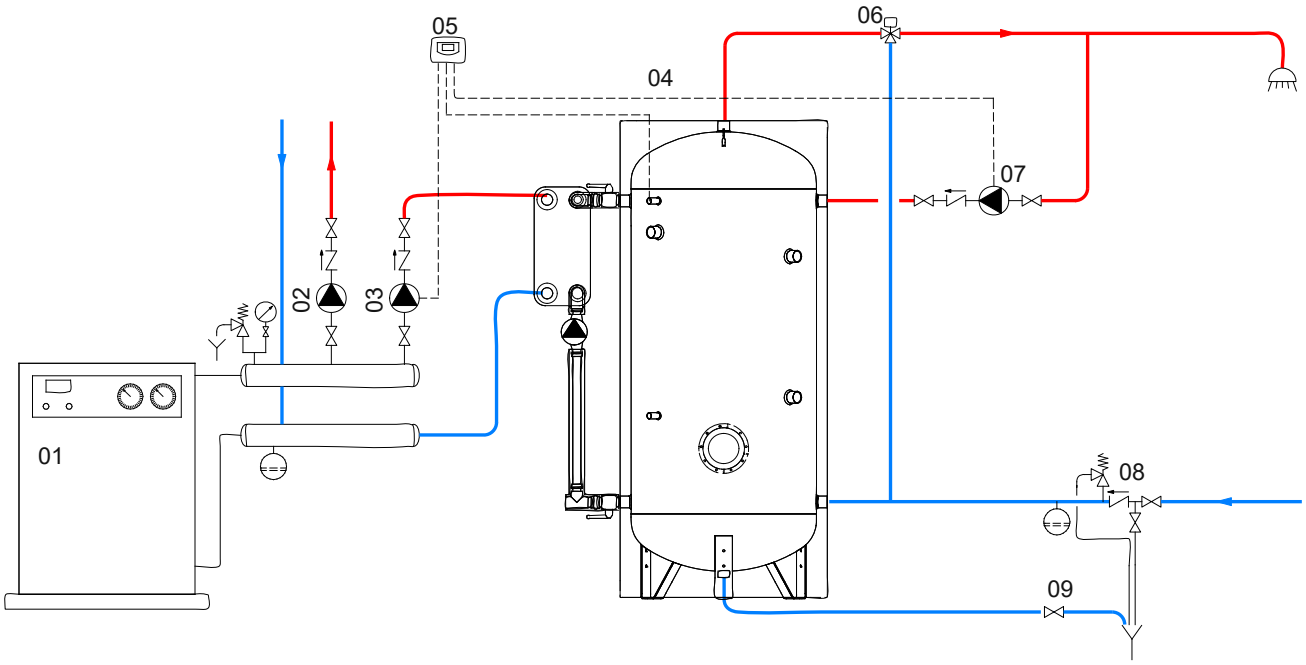

01	Generator	04	PIASTRATERM®	07	D.H.W. recirculation group
02	Heating system circulation group	05	FULL CONTROL electronic unit / thermostat	08	Hydraulic safety group
03	D.H.W. recirculation group	06	Thermostatic mixing valve	09	Blowdown valve

EXAMPLE OF INSTALLATION WITH **VOLANO UP**

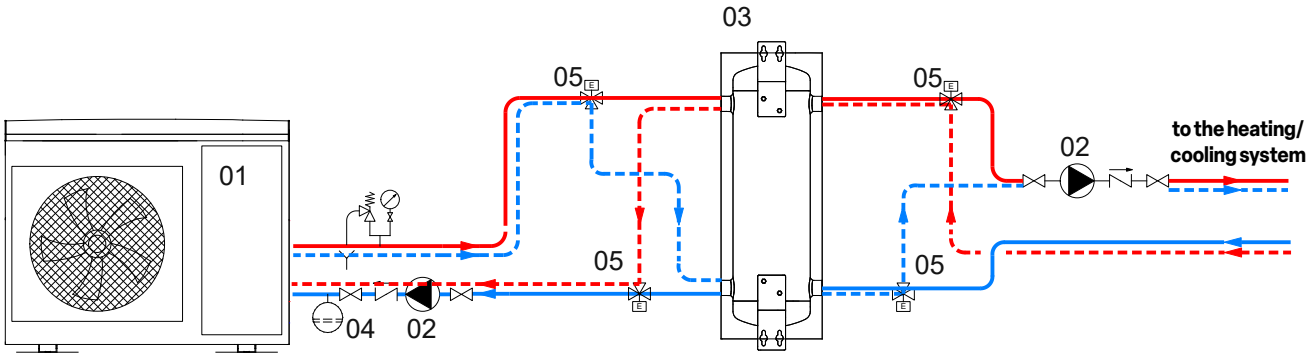

01	Generator	03	VOLANO UP	05	Motorized 3-way valve
02	Circulation group for heating/cooling system	04	Expansion vessel		

The following schemes are purely illustrative. To realize the installation, always refer to a qualified technician.

EXAMPLE OF INSTALLATION WITH **VOLANO BS**

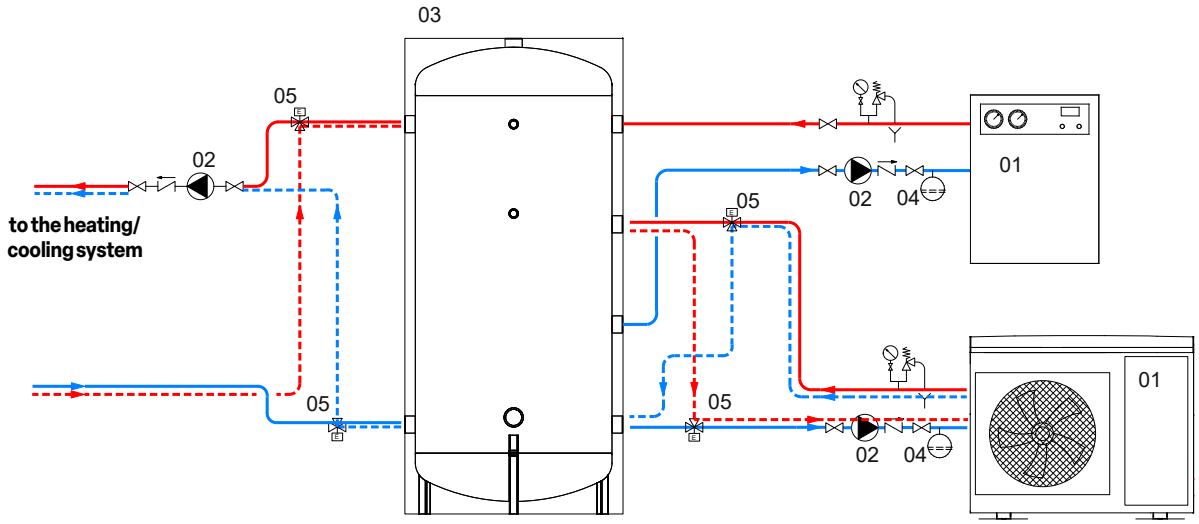

01	Generator	03	VOLANO BS	05	Motorized 3-way valve
02	Circulation group	04	Expansion vessel		

EXAMPLE OF INSTALLATION WITH **CHILLED WATER TANK**

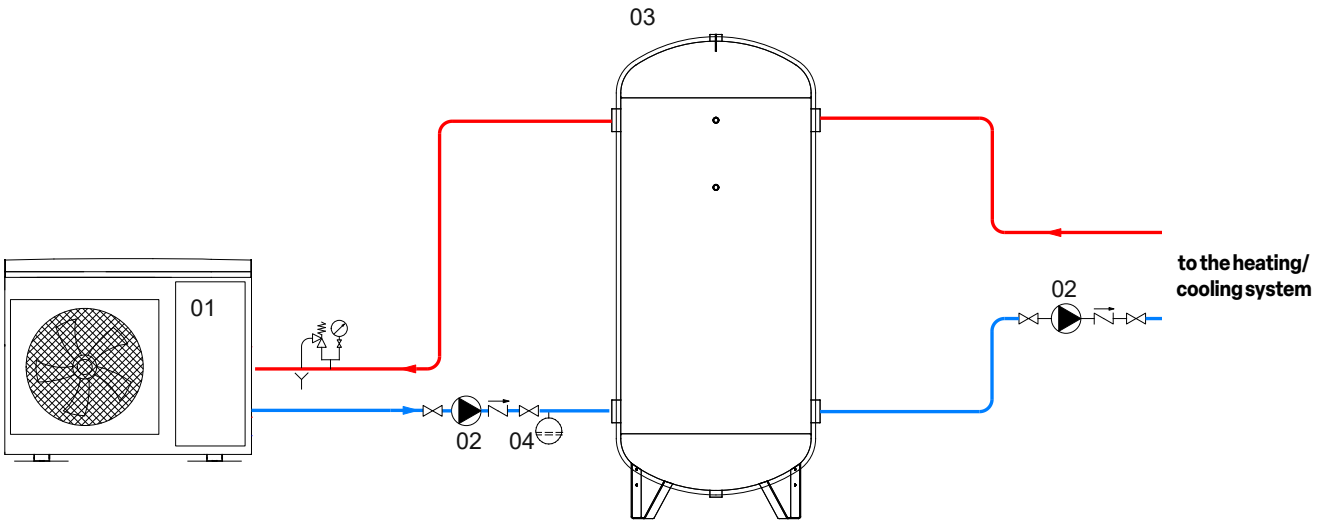

01	Generator	02	Air conditioning system circulation group	03	CHILLED WATER TANK	04	Expansion vessel

The following schemes are purely illustrative. To realize the installation, always refer to a qualified technician.

EXAMPLES OF INSTALLATION

EXAMPLE OF INSTALLATION WITH **ECO-COMBI 3 PDC**

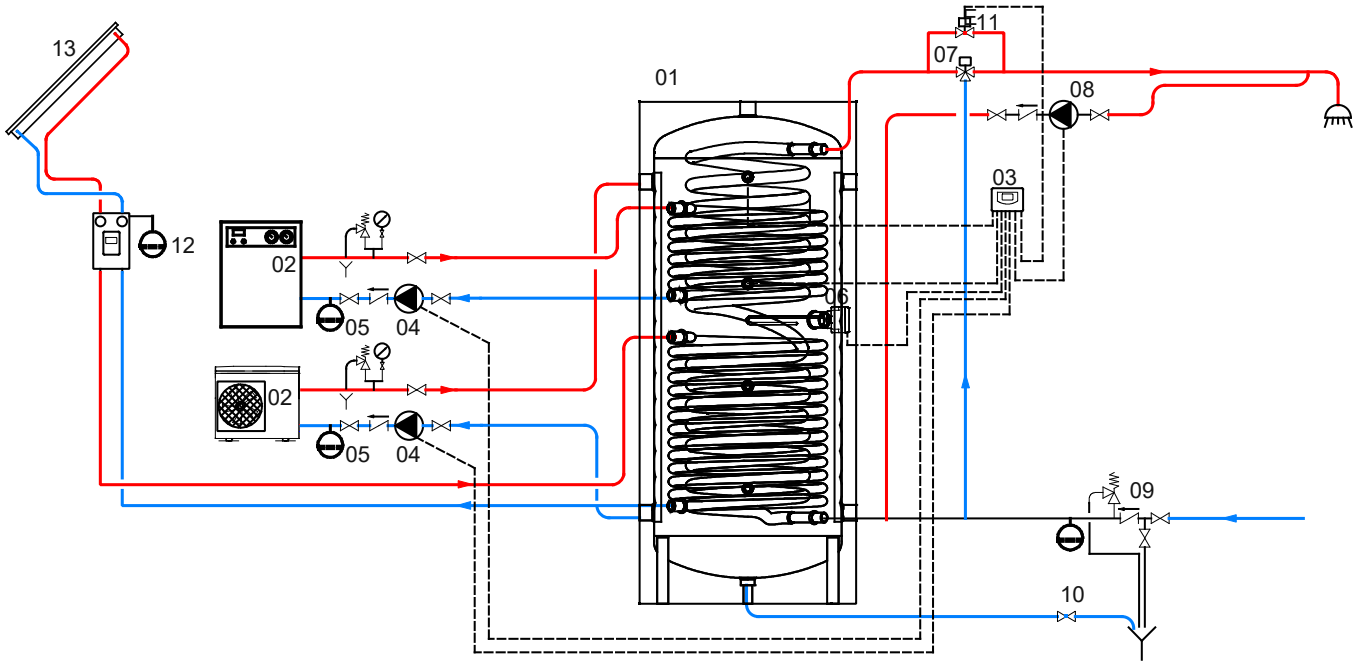

01	ECO COMBI 3 PDC	05	Expansion vessel	09	Hydraulic safety group	13	Solar panels
02	Generator	06	Electric immersion heater (optional)	10	Blowdown valve		
03	FULL CONTROL electronic unit / thermostat	07	Thermostatic mixing valve	11	By-pass solenoid valve		
04	Circulation group	08	D.H.W. recirculation group	12	Solar system circulation group		

EXAMPLE OF INSTALLATION WITH **PUFFERMAS® 2 CTS POWER**

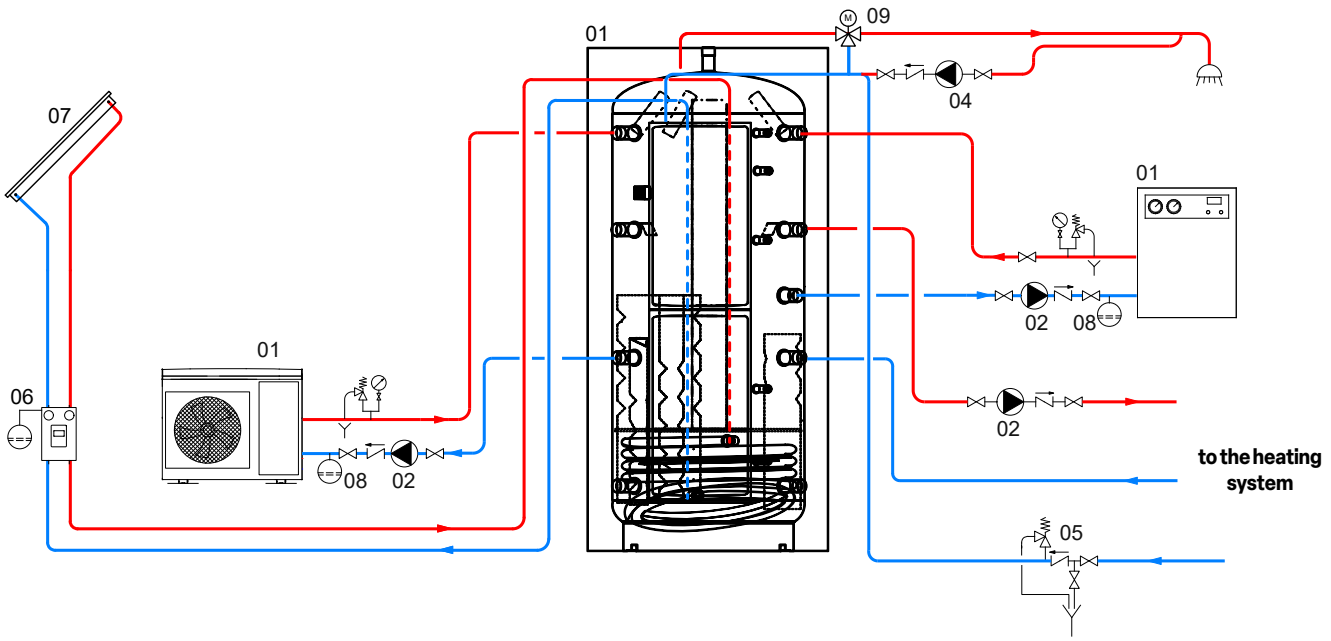

01	Generator	04	D.H.W. recirculation group	07	Solar panels
02	Heating system circulation group	05	Hydraulic safety group	08	Expansion vessel
03	PUFFERMAS® 2 CTS POWER	06	Solar system circulation group	09	Thermostatic mixing valve

The following schemes are purely illustrative. To realize the installation, always refer to a qualified technician.

EXAMPLE OF INSTALLATION WITH **PUFFERMAS® 2 CTS**

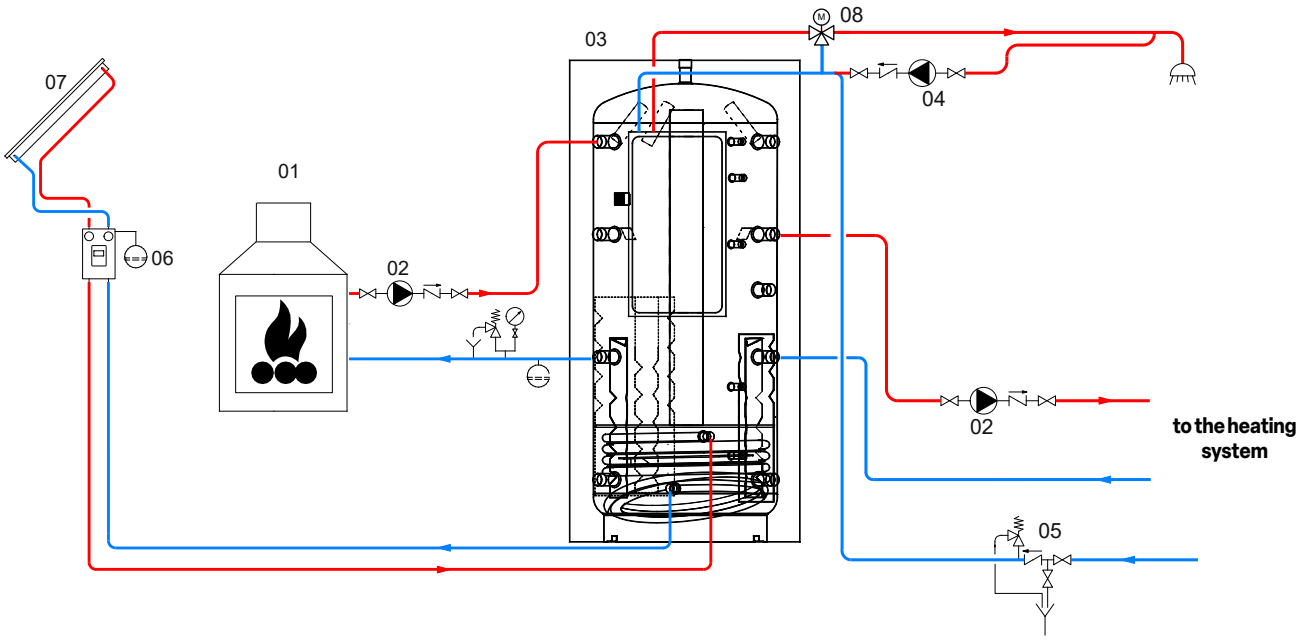

01	Generator	03	PUFFERMAS® 2 CTS	05	Hydraulic safety group	07	Solar panels
02	Heating system circulation group	04	D.H.W. recirculation group	06	Solar system circulation group	08	Thermostatic mixing valve

EXAMPLE OF INSTALLATION WITH **PUFFERMAS® 3 CTS POWER**

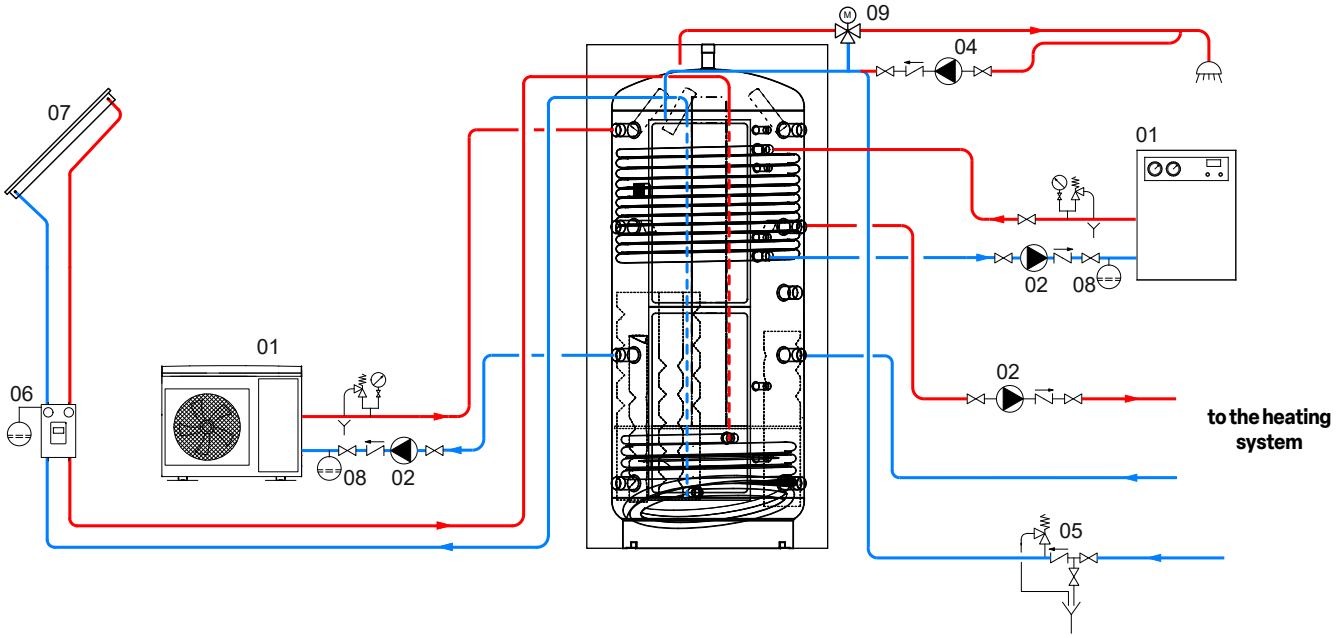

01	Generator	04	D.H.W. recirculation group	07	Solar panels
02	Heating system circulation group	05	Hydraulic safety group	08	Expansion vessel
03	PUFFERMAS® 3 CTS POWER	06	Solar system circulation group	09	Thermostatic mixing valve

The following schemes are purely illustrative. To realize the installation, always refer to a qualified technician.

EXAMPLES OF INSTALLATION

EXAMPLE OF INSTALLATION WITH **BOLLY® 3 PDC**

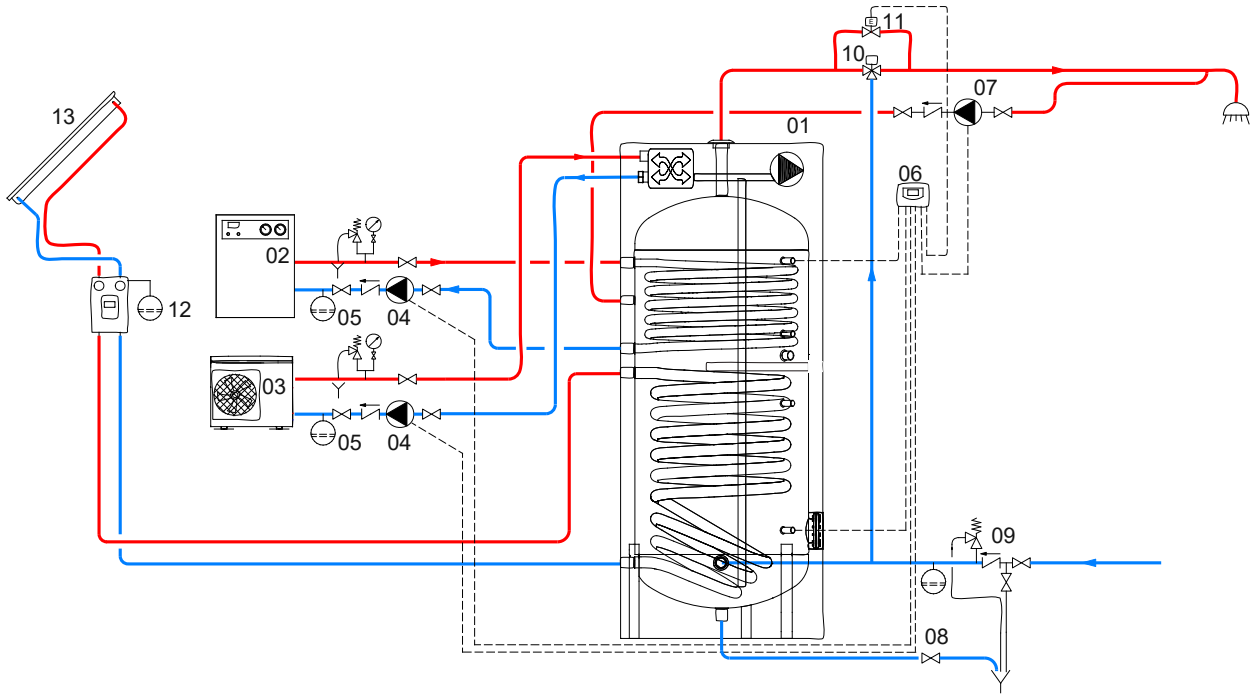

01	BOLLY® 3 PDC	05	Expansion vessel	09	Hydraulic safety group	13	Solar panels
02	Generator	06	FULL CONTROL electronic unit / thermostat	10	Thermostatic mixing valve		
03	Heat pump	07	D.H.W. recirculation group	11	By-pass solenoid valve		
04	Circulation group	08	Blowdown valve	12	Solar system circulation group		

EXAMPLE OF INSTALLATION WITH **BOLLY® 2 XL INOX**

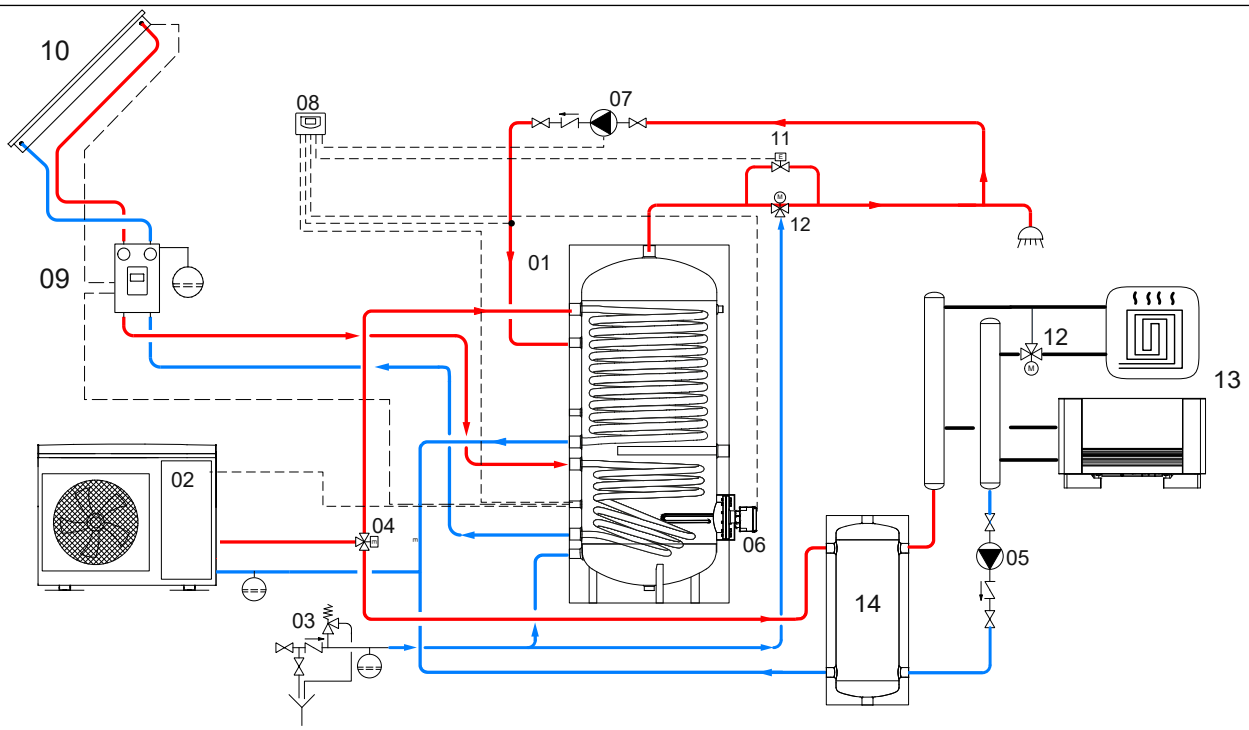

01	BOLLY® 2 XL	05	Circulation group for heating/cooling system	09	Solar system circulation group	13	Heating units
02	Generator (Heat pump)	06	Electric immersion heater	10	Solar panels	14	Buffer tank
03	Hydraulic safety group	07	D.H.W. recirculation group	11	By-pass solenoid valve		
04	Motorized 3-way valve	08	FULL CONTROL electronic unit / thermostat	12	Mixing valve		

The following schemes are purely illustrative. To realize the installation, always refer to a qualified technician.

EXAMPLE OF INSTALLATION WITH **PHC PLATE HEAT EXCHANGER** + AND SOLAR THERMAL SYSTEM FOR SWIMMING POOL HEATING

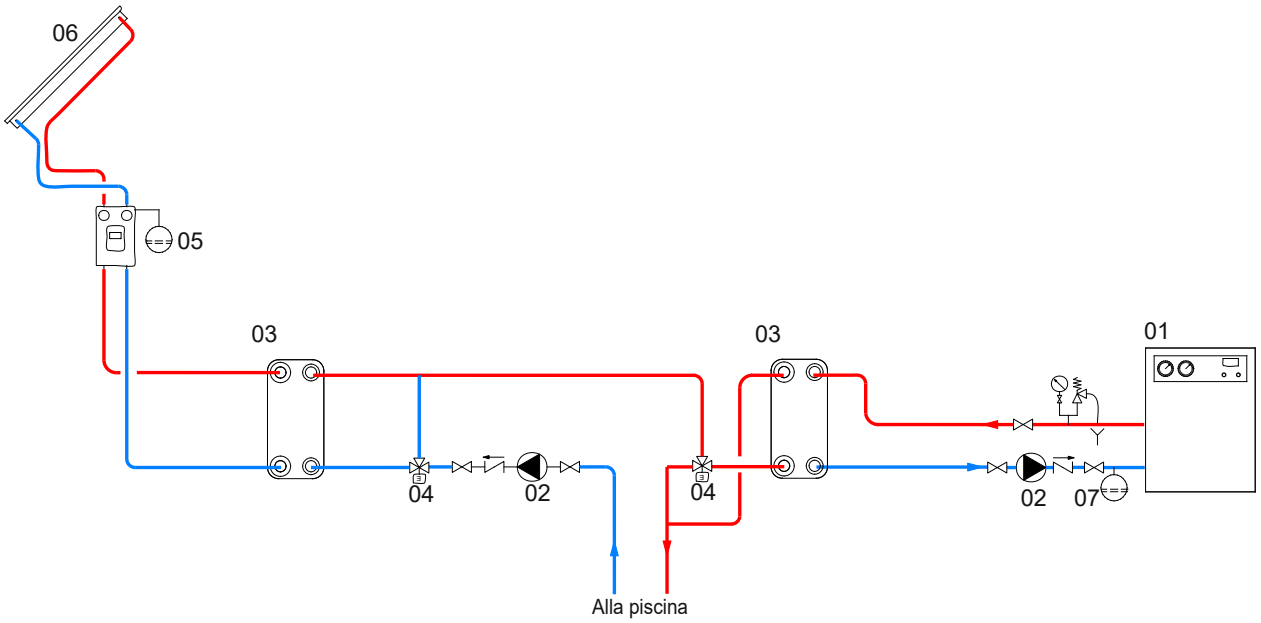

01	Generator	03	PHC PLATE HEAT EXCHANGER	05	D.H.W. circulation group	07	Expansion vessel
02	Heating system circulation group	04	Motorized 3-way valve	06	Solar panels		

EXAMPLE OF INSTALLATION WITH **VASO INERZIALE A1**

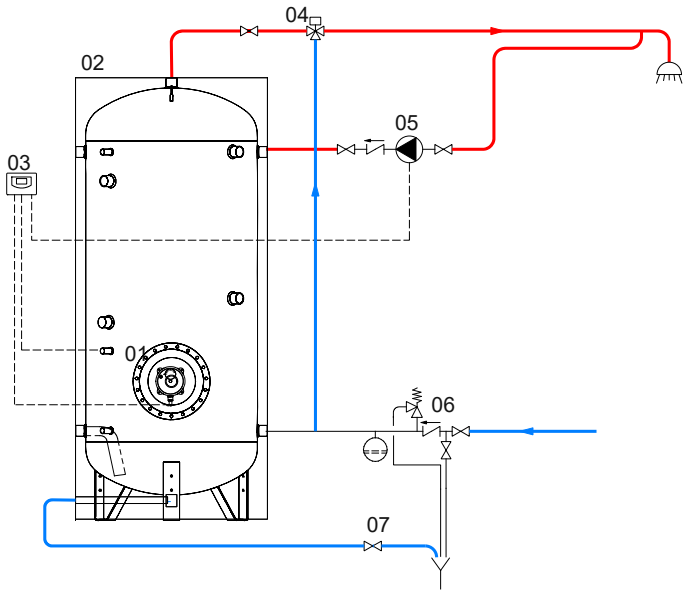

01	Electric immersion heater ad immersione	03	FULL CONTROL electronic unit / thermostat	05	D.H.W. circulation group	07	Blowdown valve
02	VASO INERZIALE A1	04	Thermostatic mixing valve	06	Hydraulic safety group		

The following schemes are purely illustrative. To realize the installation, always refer to a qualified technician.

EXAMPLES OF INSTALLATION

EXAMPLE OF INSTALLATION WITH **PRS MODULE** - FOR DHW STORAGE

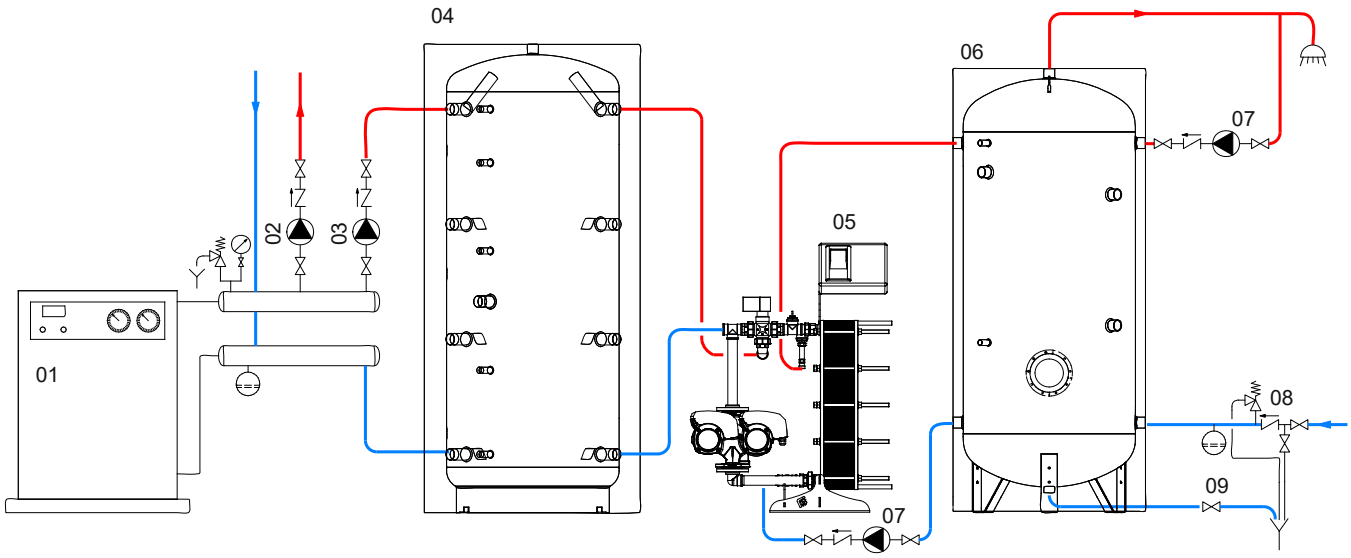

01	Generator	04	PUFFER (Buffer tank)	07	D.H.W. recirculation group
02	Heating system circulation group	05	PRS MODULE	08	Hydraulic safety group
03	Primary circuit circulation group	06	VASO INERZIALE	09	Blowdown valve

EXAMPLE OF INSTALLATION WITH **PRS MODULE** - FOR DHW STORAGE

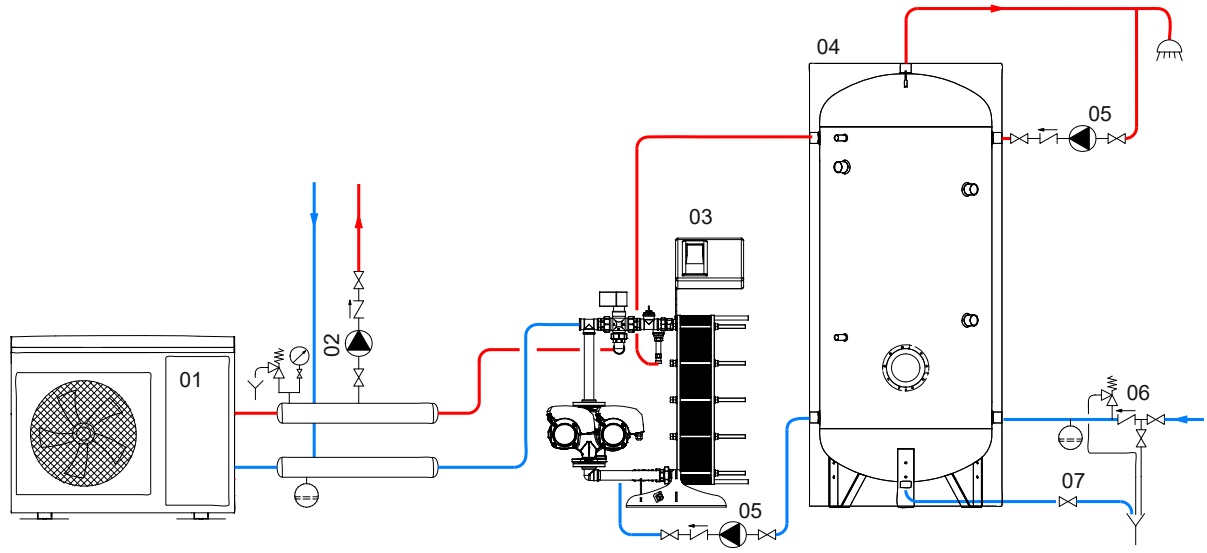

01	Generator	04	VASO INERZIALE	07	Blowdown valve
02	Heating system circulation group	05	D.H.W. recirculation group		
03	PRS MODULE	06	Hydraulic safety group		

The following schemes are purely illustrative. To realize the installation, always refer to a qualified technician.

EXAMPLE OF INSTALLATION WITH **PRS MODULE -** WITHOUT DHW STORAGE

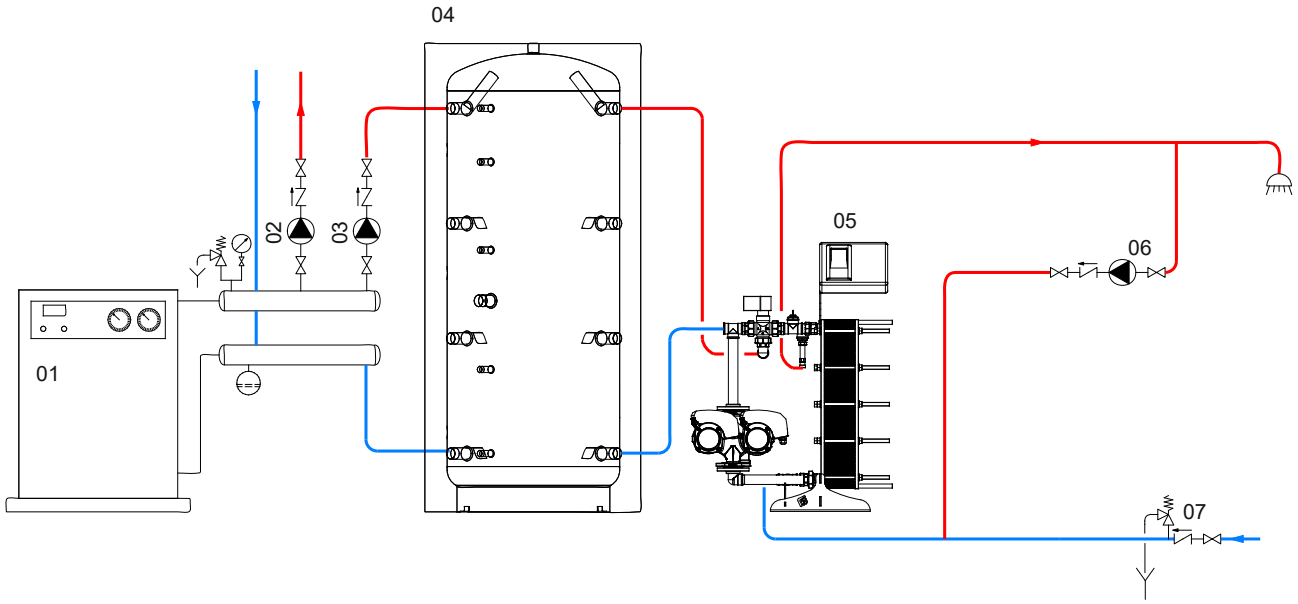

01	Generator	03	Primary circuit circulation group	05	PRS MODULE	07	Hydraulic safety group
02	Heating system circulation group	04	PUFFER (Buffer tank)	06	D.H.W. recirculation group		

EXAMPLE OF INSTALLATION WITH **EXTRA 1 VAPORE**

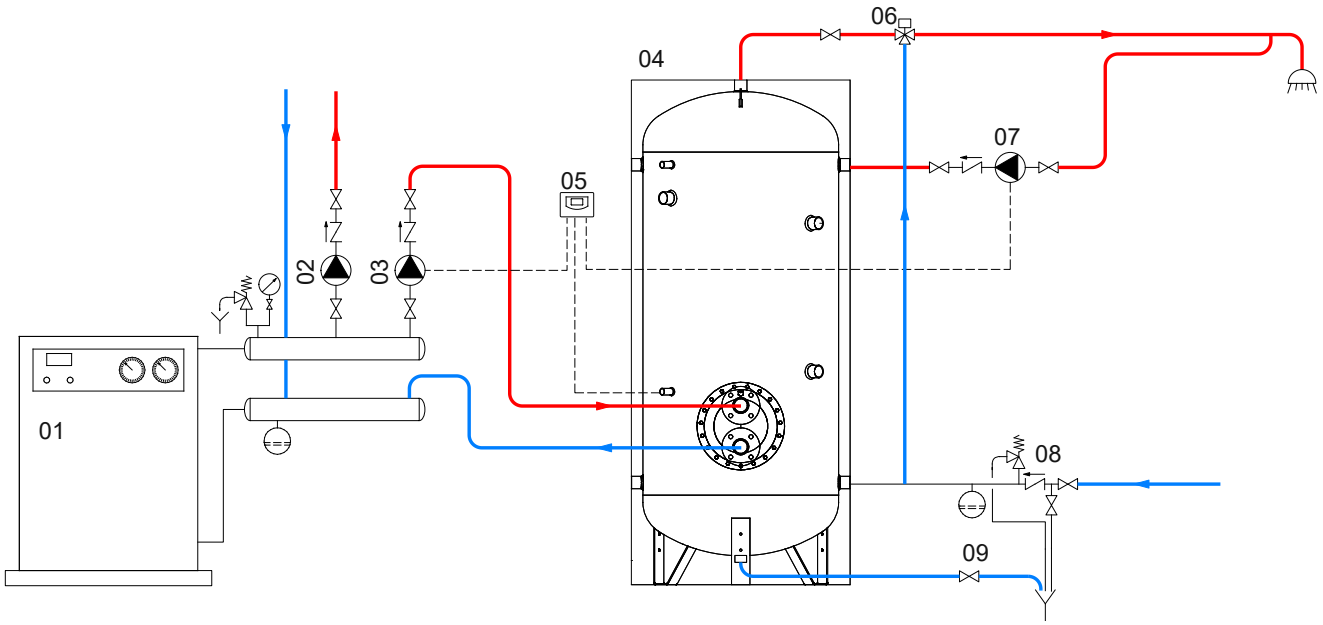

01	Generator	04	EXTRA 1 VAPORE	07	D.H.W. recirculation group
02	Heating system circulation group	05	FULL CONTROL electronic unit / thermostat	08	Hydraulic safety group
03	D.H.W. circulation group	06	Thermostatic mixing valve	09	Blowdown valve

The following schemes are purely illustrative. To realize the installation, always refer to a qualified technician.

EXAMPLES OF INSTALLATION

EXAMPLE OF INSTALLATION WITH **ECO COMBI 3 PDC HY**

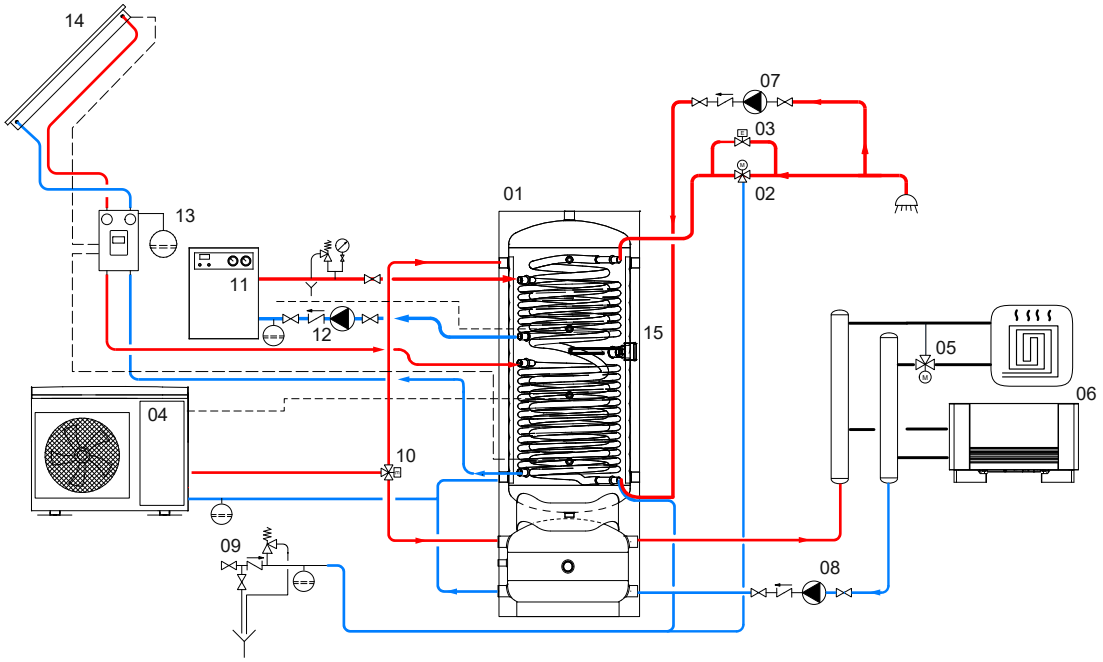

01	ECO COMBI 3 PDC HY	05	Thermostatic mixing valve	09	Hydraulic safety group	13	Solar system circulation group
02	Thermostatic mixing valve	06	Heating units	10	Motorized 3-way valve	14	Solar panels
03	By-pass solenoid valve	07	D.H.W. recirculation group	11	Generator (traditional)	15	Electric immersion heater
04	Generator (Heat pump)	08	Circulation group for heating/cooling system	12	Circulation group		

EXAMPLE OF INSTALLATION WITH **PUFFERMAS 3 CTS PDC AND CHILLED WATER TANK**

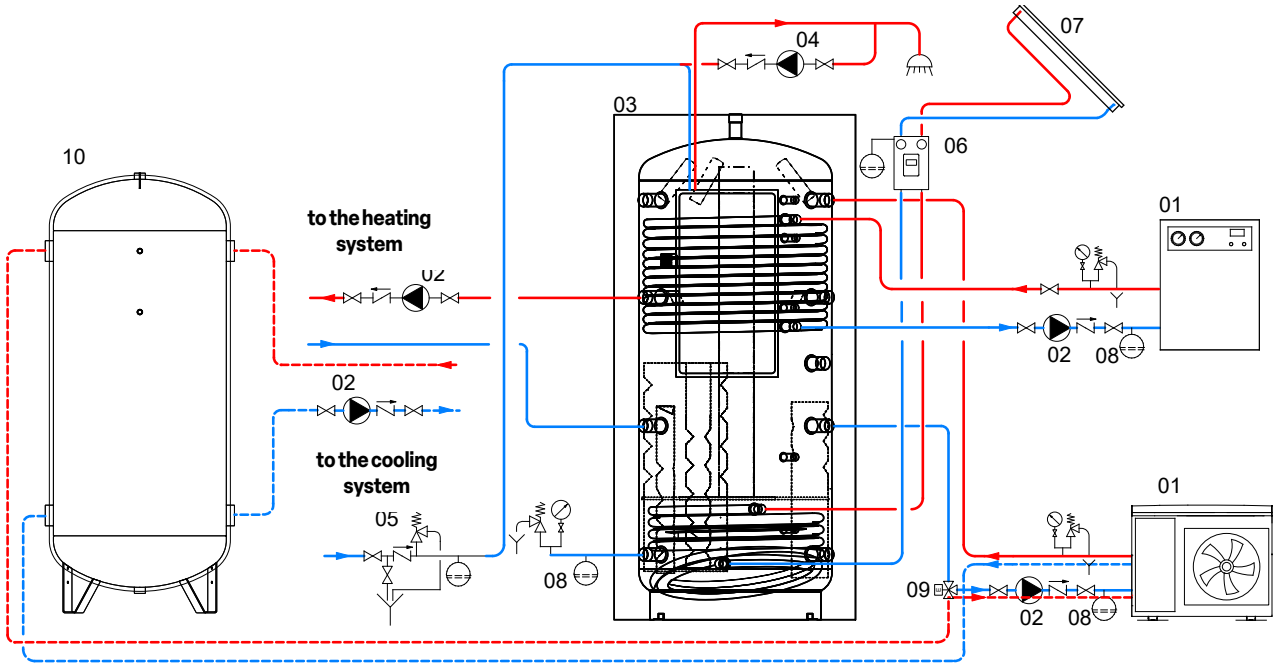

01	Generator	04	D.H.W. recirculation group	07	Solar panels	10	CHILLED WATER TANK
02	Circulation group	05	Hydraulic safety group	08	Expansion vessel		
03	PUFFERMAS 3 CTS PDC	06	Solar system circulation group	09	Electronic valve		

The following schemes are purely illustrative. To realize the installation, always refer to a qualified technician.

EXAMPLE OF INSTALLATION WITH **PUFFERMAS 1 PDC**

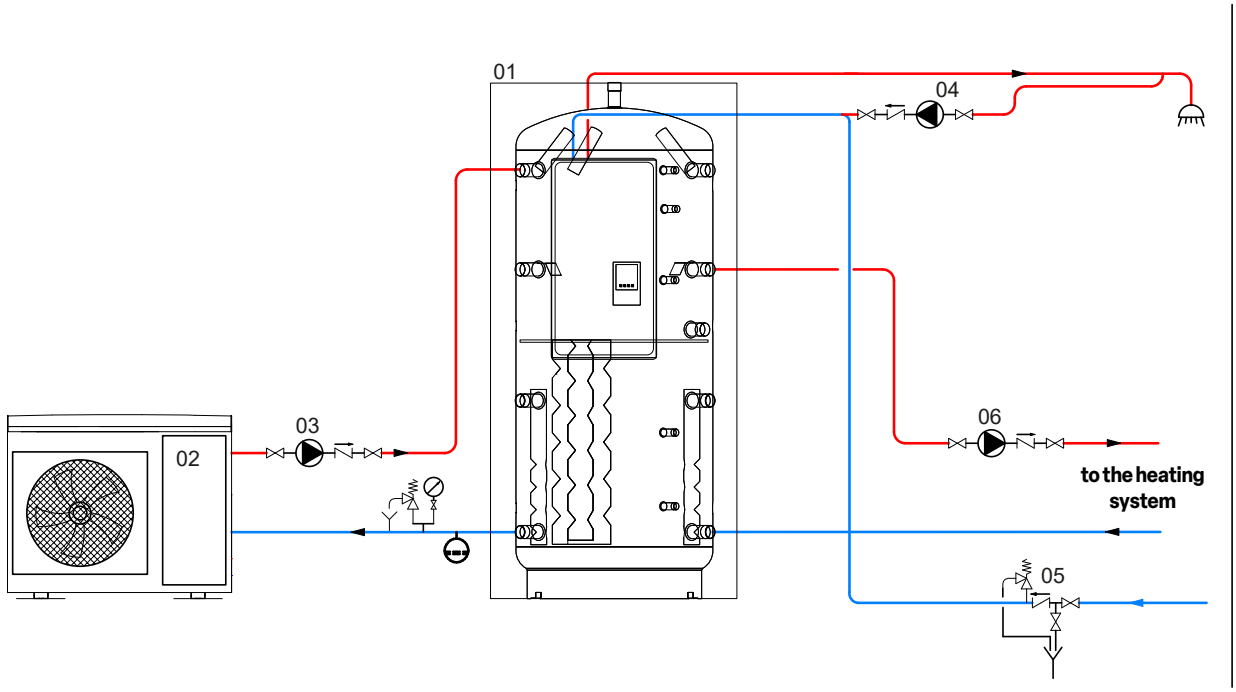

01	PUFFERMAS 1 PDC	03	Circulation group	05	Hydraulic safety group
02	Generator (Heat pump)	04	D.H.W. recirculation group	06	Heating system circulation group

EXAMPLE OF INSTALLATION WITH **EXTRA 3**

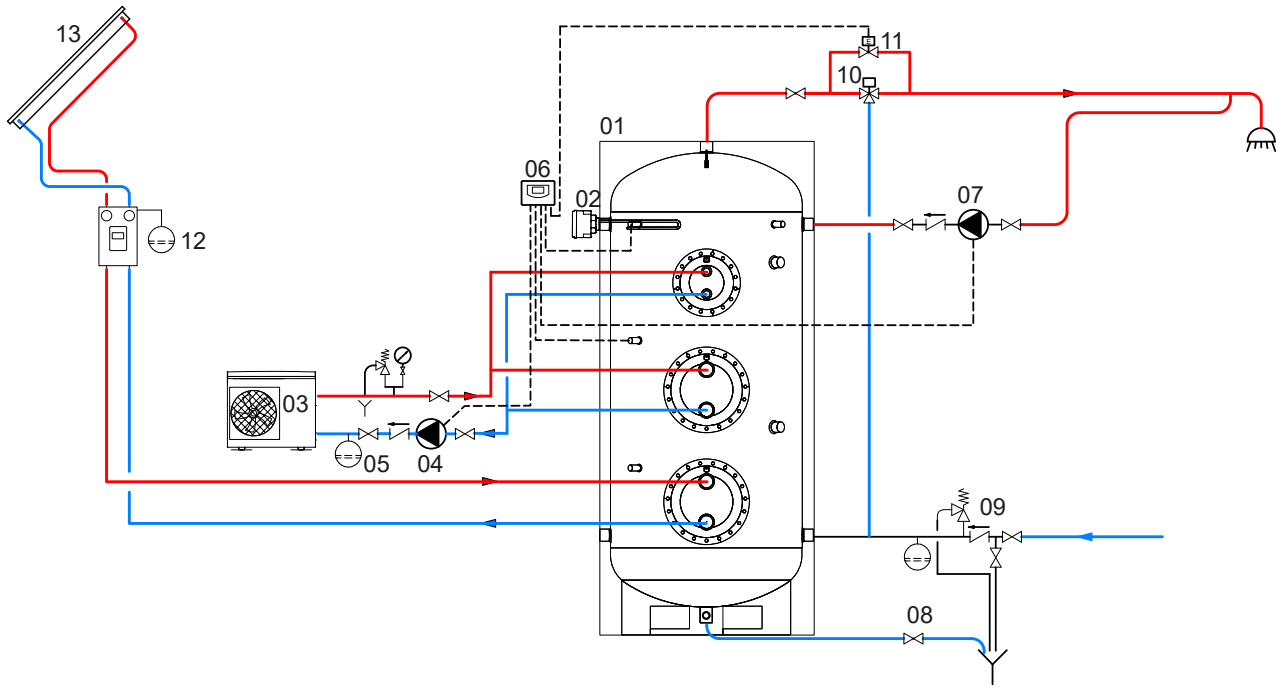

01	Extra 3	04	Circulation group	07	D.H.W. recirculation group	10	Thermostatic mixing valve
02	Electric immersion heater	05	Expansion vessel	08	Blowdown valve	11	By-pass solenoid valve
03	Generator (Heat pump)	06	FULL CONTROL electronic unit / thermostat	09	Hydraulic safety group		

The following schemes are purely illustrative. To realize the installation, always refer to a qualified technician.

CERTIFICATIONS

Cordivari has always placed among its main goals:
The continuous improvement of the products manufactured;
The commitment to use low environmental impact materials that can be almost 100% recycled;
The achievement of the total quality
According to that, Cordivari has worked to obtain the most significant certifications that attest the commitment of the Company on the inside and outwards.



DNV

CERTIFICATO DI SISTEMA DI GESTIONE

Si certifica che il sistema di gestione di
CORDIVARI S.r.l.
Zona Industriale Pagliare snc - 64020 Morro D'Oro (TE) - Italia
e i siti come elencati nell'Appendice che accompagna questo certificato

È conforme allo Standard:
ISO 9001:2015

Questa certificazione è valida per il seguente campo applicativo:
Progettazione e fabbricazione di radiatori, bollitori, termoaccumulatori, recipienti in pressione, sistemi termici solari, serbatoi a pressione atmosferica (IAF 17, 18)

Luogo e Data: Vimercate (MB), 21 novembre 2023

Per l'Organismo di Certificazione: DNV - Business Assurance Via Energy Park, 14, - 20871 Vimercate (MB) - Italy

Claudia Baroncini
Management Representative

Quality Certificate UNI EN ISO 9001



DNV

CERTIFICATO DI SISTEMA DI GESTIONE

Si certifica che il sistema di gestione di
CORDIVARI S.r.l.
Zona Industriale Pagliare snc - 64020 Morro D'Oro (TE) - Italia
e i siti come elencati nell'Appendice che accompagna questo certificato

È conforme allo Standard:
ISO 14001:2015

Questa certificazione è valida per il seguente campo applicativo:
Progettazione e fabbricazione di radiatori, bollitori, termoaccumulatori, recipienti in pressione e serbatoi a pressione atmosferica in acciaio tramite le fasi di stampaggio, taglio, piegatura, calandratura, saldatura, zincatura (esclusi radiatori e termoaccumulatori), sabbiatura (solo bollitori), verniciatura interna a polvere (solo bollitori), verniciatura esterna a polvere o a liquido, schiumatura e coibentazione (solo bollitori e termoaccumulatori), assemblaggio, collaudo elettrico (ove previsto), imballaggio e spedizione. Progettazione e fabbricazione di sistemi termici solari tramite le fasi di taglio, saldatura, verniciatura esterna a liquido, assemblaggio, imballaggio e spedizione. Progettazione e fabbricazione di serbatoi a pressione atmosferica in PE tramite le fasi di stampaggio rotazionale, estrazione, foratura, imballaggio e spedizione. Progettazione e fabbricazione di sistemi integrati con e senza pompa di calore tramite le fasi di taglio, stampaggio, saldatura, assemblaggio circuito gas, vuoto e riempimento gas, collaudo di tenuta ed elettrico, imballaggio e spedizione. Trattamento di depurazione reflui e rifiuti liquidi provenienti esclusivamente dalle altre sedi Cordivari. (IAF 17, 18, 39)
Valutato secondo le prescrizioni del Regolamento Tecnico RT-09

Luogo e Data: Vimercate (MB), 16 dicembre 2023

Per l'Organismo di Certificazione: DNV - Business Assurance Via Energy Park, 14, - 20871 Vimercate (MB) - Italy

Claudia Baroncini
Management Representative

00010

Environmental managing System Certificate UNI EN ISO 14001:2004



DNV

CERTIFICATO DI SISTEMA DI GESTIONE

Si certifica che il sistema di gestione di
CORDIVARI S.r.l.
Zona Industriale Pagliare Snc - 64020 Morro D'oro (TE) - Italy
e i siti come elencati nell'Appendice che accompagna questo certificato

È conforme allo Standard:
ISO 45001:2018

Questa certificazione è valida per il seguente campo applicativo:
Progettazione e fabbricazione di radiatori, bollitori, termoaccumulatori, recipienti in pressione e serbatoi a pressione atmosferica in acciaio tramite le fasi di stampaggio, taglio, piegatura, calandratura, saldatura, zincatura (esclusi radiatori e termoaccumulatori), sabbiatura (solo bollitori), verniciatura interna a polvere (solo bollitori), verniciatura esterna a polvere o a liquido, schiumatura e coibentazione (solo bollitori e termoaccumulatori), assemblaggio, collaudo elettrico (ove previsto), imballaggio e spedizione. Progettazione e fabbricazione di sistemi termici solari tramite le fasi di taglio, saldatura, verniciatura esterna a liquido, assemblaggio, imballaggio e spedizione. Progettazione e fabbricazione di serbatoi a pressione atmosferica in PE tramite le fasi di stampaggio rotazionale, estrazione, foratura, imballaggio e spedizione. Progettazione e fabbricazione di sistemi integrati con e senza pompa di calore tramite le fasi di taglio, stampaggio, saldatura, assemblaggio circuito gas, vuoto e riempimento gas, collaudo di tenuta ed elettrico, imballaggio e spedizione. Trattamento di depurazione reflui e rifiuti liquidi provenienti esclusivamente dalle altre sedi Cordivari. (IAF 17, 18, 39)

Luogo e Data: Vimercate (MB), 21 Maggio 2024

Per l'Organismo di Certificazione: DNV - Business Assurance Via Energy Park, 14, - 20871 Vimercate (MB) - Italy

Claudia Baroncini
Management Representative

Occupational Health and Safety Management Systems Certificate UNI EN ISO 45001

ITALIAN AND EUROPEAN LAWS AND REGULATIONS

Main laws and regulations concerning production and installation of pressurised tanks:

- ErP Energy Related Products – Ecodesign Directive 2009/125/CE + Regulation (EU) 2024/1781 / ESPR (Ecodesign for Sustainable Products Regulation)
- EN 15332:2020 Heating boilers - Energy assessment of hot water storage tanks.
- Directive 2014/68/EU (PED) for pressurised equipment.
- Italian DLGS 15 February 2016, n. 26 - Application of Directive 2014/68/EU Pressure Equipment.
- Italian Ministerial Decree DM n. 329:2004 - Installation of equipment and pressurised ensemble.
- Law January 9th 1991, n. 10 – National energy plan, for energy saving and energy development for renewable energy source.
- D.P.R. 26-8-1993 n. 412 – applying regulation law 10/9.
- D.L. 25/01/1992, n.108 – application of Directive n. 89/109/CEE concerning materials and objects intended to come into contact with food.
- Italian Ministerial Decree DM n. 174:2004 concerning water for human consumption.
- Directive 2014/29/EU - simple pressure vessels .
- UNI CTI 8065 - Water Treatment
- "Raccolta R ed. 2009 cap. R.1.A." - Expansion Systems



Direttiva PED 2014/68/UE – Modulo B
PED Directive 2014/68/EU – Module B

Esame UE del Tipo – Tipo di Produzione
EU Type examination – Production Type

Certificato n. / Certificate no. 714-P-2529 REV. 00

Attrezzatura a pressione / Pressure equipment: VASO A MEMBRANA – FAMIGLIA RPC 202 MODELLI AD ASSE VERTICALE
Categoria / Category: II-III-IV vedi elenco modelli in allegato

Numero di fabbrica / Serial number: P158863 (prototipo Mod. 500/10)
Disegno / Drawing: PED_017_2021_1 rev. 1 del 03/12/2021

Ps (bar): 0 / +10
V (l) / DN: fino a 477,4 l vedi elenco dei modelli in allegato
Ts (°C): -10 / +99 °C
Fluido / Fluid: Aria-Acqua Gruppo 2 Liq/Gas

Fabbricante / Manufacturer: CORDIVARI S.r.l. Via Padova - Zona Industriale Pagliare - 64020 Morro D'Oro TE
Sito produttivo / Production site: CORDIVARI S.r.l. Zona Industriale Vomano - 64020 Morro D'Oro TE
Verbale di verifica / Evaluation report: P0002305-03-R01, P0002305-03-R02
Numero di pratica / Job number: P0002305

ECO Certificazioni, Organismo Notificato N. 0714 in conformità all'art. 14 della Direttiva 2014/68/UE del Parlamento Europeo e del Consiglio del 15 maggio 2014, certifica che questo apparecchio/insieme verificato secondo la procedura di cui all'allegato III modulo B – Tipo di Produzione, è conforme ai requisiti essenziali di salute e sicurezza, definiti nell'allegato I della Direttiva.
I requisiti essenziali di salute e sicurezza sono assicurati dalla rispondenza alle norme tecniche applicate

ECO Certificazioni, Notified Body No. 0714 in accordance with Article 14 of the Directive 2014/68/EU of the European Parliament and the Council 15th May 2014, certifies that this equipment/assembly was tested according to the procedure set out in Annex III Module B – Production Type and complies with the essential health and safety requirements set out in the Annex I of the Directive.
The essential health and safety requirements are assured by compliance with applied technical standards:

UNI EN 13831:2008

Il fabbricante è impegnato ad informare ECO Certificazioni di tutte le modifiche al tipo approvato, che possono influire sulla conformità dell'attrezzatura a pressione ai requisiti essenziali di sicurezza o sulle condizioni di validità del certificato. Tali modifiche fanno decadere la validità del certificato e richiedono un'approvazione sotto forma di un supplemento al certificato.
La documentazione indicata nel presente Certificato è conservata dall'Organismo di Certificazione per 10 anni.
I regolamenti pubblicati sul sito web di ECO Certificazioni S.p.A. si applicano nella versione ivi disponibile.
Questo certificato, incluso l'allegato, può essere riprodotto solo integralmente e senza alcuna modifica.
In accordo con quanto previsto nell'Allegato III modulo B – Tipo di Produzione della Direttiva 2014/68/UE la marcatura CE sul prodotto deve essere seguita dal n. 0714 che identifica ECO Certificazioni come l'Organismo Notificato incaricato della verifica sull'apparecchio/insieme.

The manufacturer shall inform ECO Certificazioni of all changes to the approved type that may affect the conformity of the pressure equipment with the essential safety requirements or the conditions for validity of the certificate. Such changes will void the certificate and require an approval in the form of an addition to the original certificate.
The documents indicated in this Certificate are kept by the Certification Body for 10 years.
The regulations published in the web site of ECO Certificazioni S.p.A. apply in their current version.
This certificate, annex included, may only be reproduced in its entirety and without any change.
In accordance with the Annex III Module B – Production Type of Directive 2014/68/EU the CE marking must be followed by n. 0714 that identifies ECO Certificazioni as Notified Body responsible for equipment/assembly verification.

Esempio di marcatura / Marking example: CE 0714
Modulo / Module: B – Tipo di Produzione / Production Type

Faenza, Prima emissione / First issuing 11.03.2022
Emissione corrente / Current issuing 11.03.2022
Scadenza certificato / Expiry Date 10.03.2032

Il Direttore Generale / The General Manager
Ing. Gualtiero Fabbri

CE certification in accordance with requirements of 2014/68/UE Pressure Equipement regulations for pressurized tanks (exchanging diaphragm pressure vessels).

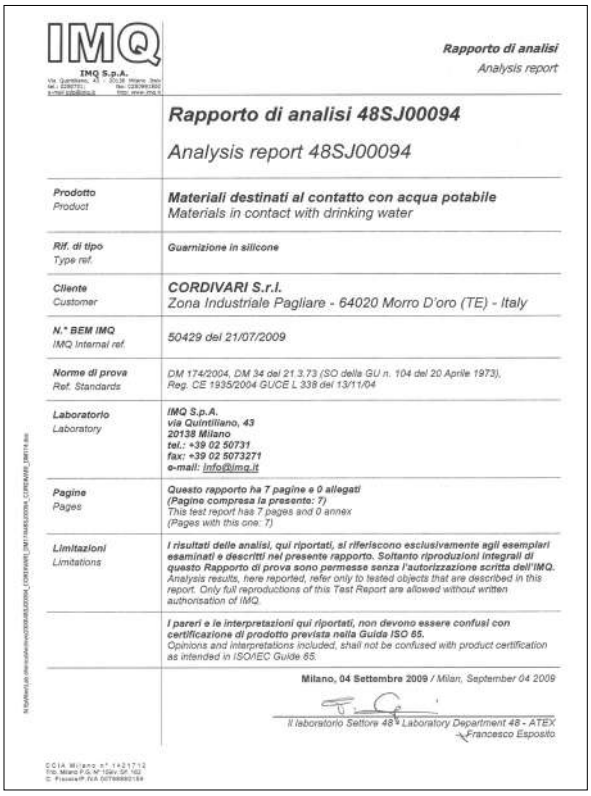

IMQ S.p.A.

Rapporto di analisi
Analysis report

Rapporto di analisi 48SJ00094
Analysis report 48SJ00094

Prodotto / Product	Materiali destinati al contatto con acqua potabile / Materials in contact with drinking water
Rif. di tipo / Type ref.	Guarnizione in silicone
Cliente / Customer	CORDIVARI S.r.l. Zona Industriale Pagliare - 64020 Morro D'oro (TE) - Italy
N.° BEM IMQ / IMQ Internal ref.	50429 del 21/07/2009
Norme di prova / Ref. Standards	DM 174/2004, DM 34 del 21.3.73 (SO della GU n. 104 del 20 Aprile 1973), Reg. CE 1935/2004 GUCE L 338 del 13/11/04
Laboratorio / Laboratory	IMQ S.p.A. via Quintiliano, 43 20138 Milano tel.: +39 02 50731 fax: +39 02 5073271 e-mail: info@imq.it
Pagine / Pages	Questo rapporto ha 7 pagine e 0 allegati (Pagine compresa la presente: 7) / This test report has 7 pages and 0 annex (Pages with this one: 7)
Limitazioni / Limitations	I risultati delle analisi, qui riportati, si riferiscono esclusivamente agli esemplari esaminati e descritti nel presente rapporto. Soltanto riproduzioni integrali di questo Rapporto di prova sono permesse senza l'autorizzazione scritta dell'IMQ. Analysis results, here reported, refer only to tested objects that are described in this report. Only full reproductions of this Test Report are allowed without written authorisation of IMQ.
	I pareri e le interpretazioni qui riportati, non devono essere confusi con certificazione di prodotto prevista nella Guida ISO 65. Opinions and interpretations included, shall not be confused with product certification as intended in ISO/IEC Guide 65.

Milano, 04 Settembre 2009 / Milan, September 04 2009

Il laboratorio Settore 48 / Laboratory Department 48 - ATEX
Francesco Esposito

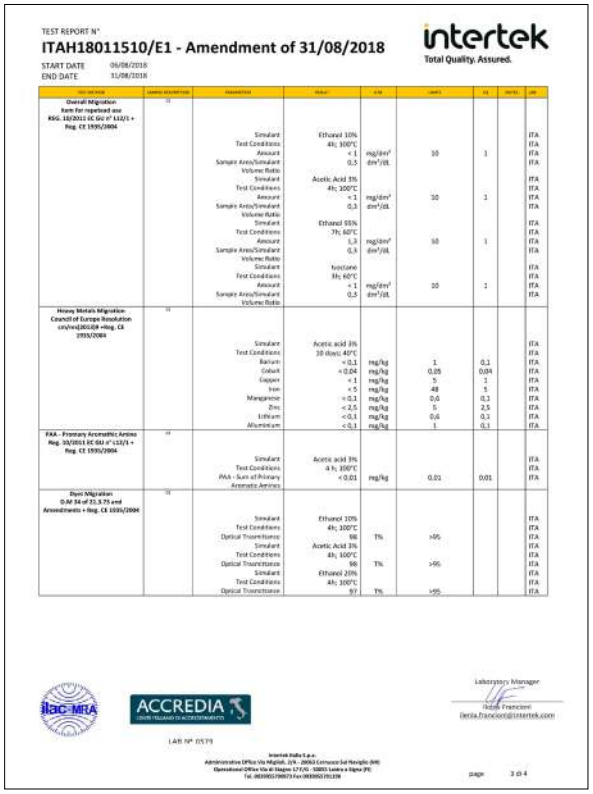

TEST REPORT N°
ITAH18011510/E1 - Amendment of 31/08/2018
START DATE 06/08/2018
END DATE 31/08/2018

intertek
Total Quality. Assured.

Laboratory Manager
Ilaria Francioni
ilaria.francioni@intertek.com

Test report of internal treatment for food use Polywarm® in accordance with D.M. nr. 174 del 06/04/04



WRAS APPROVED MATERIAL

Approval Number 2307508
Test Report: MA8028/R

5th July 2023

Cordivari Srl.
Zi Pagliare,
I-64020,
Teramo,
Italy

Water Regulations Approval Scheme Ltd.
Unit 13,
Willow Road,
Pen y Fan Industrial Estate,
Crumlin,
Gwent,
NP11 4EG

WATER REGULATIONS APPROVAL SCHEME LTD. (WRAS)
MATERIAL APPROVAL

The material referred to in this letter is suitable for contact with wholesome water for domestic purposes having met the requirements of BS6920-1:2000 and/or 2014 'Suitability of non-metallic products for use in contact with water intended for human consumption with regard to their effect on the quality of the water'.

The reference relates solely to its effect on the quality of the water with which it may come into contact and does not signify the approval of its mechanical or physical properties for any use.

COATINGS, PAINTS & LININGS- FACTORY APPLIED PIPE & FITTINGS COATINGS. 5030

'Polywarm'.
Factory applied, brown coloured enamel powder coating. Apply as per manufacturer's instructions '1024'. Cure for 20 minutes@240°C.
For use with water up to 85°C.

APPROVAL NUMBER: 2307508
APPROVAL HOLDER: CORDIVARI SRL.

The Scheme reserves the right to review approval.
Approval 2307508 is valid between July 2023 and July 2028

An entry, as above, will accordingly be included in the Water Fittings Directory on-line under the section headed, "Materials which have passed full tests of effect on water quality".

The Directory may be found at: www.wrasapprovals.co.uk/approvals-directory/

Yours Faithfully

Ian Hughes
WRAS Approvals Manager

WRAS -Water Regulation Advisory Scheme certificate for Polywarm® coating



CORDIVARI Lab

CORDIVARI S.r.l.
Zona Industriale Pagliare - 64020 MORRO D'ORO (TE) Italia
Tel. +39 085 80.40.1 r.a. - Fax UFF: COMM: +39 085 80.41.418 - Fax CENTR. +39 085 8041280
C.F. - P. IVA - REG. IMPRESE TE N. IT 00735710673 - R.E.A. TE N. 92210 - CAP. SOC. € 4.000.000,00 i.v.
www.cordivari.it - info@cordivari.it

RAPPORTO DI PROVA

VERIFICA DISPERSIONE TERMICA AI FINI DELL'ETICHETTATURA ENERGETICA PREVISTA DAL REGOLAMENTO (UE) N. 814/2013 DELLA COMMISSIONE DEL 2 AGOSTO 2013 RECANTE MODALITÀ DI APPLICAZIONE DELLA DIRETTIVA 2009/125/CE DEL PARLAMENTO EUROPEO E DEL CONSIGLIO IN MERITO ALLE SPECIFICHE PER LA PROGETTAZIONE ECOCOMPATIBILE DEGLI SCALDACQUA E DEI SERBATOI PER L'ACQUA CALDA.

Rapporto di prova n°	**BO-CLEN 02.15**
Data di emissione	**21/08/2015**
N° di pagine totale	**7**
Laboratorio di prova	**Cordivari LAB**
Nome del richiedente	Cordivari srl
Specifiche di prova	EN15332:2007_5.4
Scopo della prova	Determinare la dispersione termica nelle condizioni previste dalla norma al fine di caratterizzare il prodotto oggetto della prova nell'ambito delle classi energetiche previste dal Regolamento UE 814/2013
Descrizione dell'oggetto in prova	Bollitore (preparatore di acqua calda ad uso igienico sanitario) ad accumulo con scambiatore di calore interno fisso. Materiale del corpo e dello scambiatore: acciaio al carbonio. Esecuzione cilindrico verticale, trattamento anticorrosivo delle membrature a contatto con l'acqua sanitaria e coibentazione in schiuma di poliuretano espanso realizzata " di corpo" sul bollitore.
Marchio	**CORDIVARI**
Costruttore	Cordivari SRL
Indirizzo costruttore	Zona Industriale Pagliare 64020 Morro D'Oro (TE) Italia
Modello	BOLLY 1 ST 200
Data del ricevimento oggetto in prova	06/08/2015
Periodo di prova	Dal 19 al 21 AGOSTO 2015

Questo rapporto non può essere riprodotto, se non integralmente, senza l'autorizzazione del laboratorio di prova che lo rilascia. I risultati esposti in questo rapporto di prova si riferiscono esclusivamente all'oggetto testato. Cordivari LAB non assume nessuna responsabilità per danni derivanti dall'interpretazione dei dati del presente documento riprodotto al di fuori del suo contesto.

0 Revisione	P.I. Giovanni D'Egidio Esecuzione Test	Ing. Ivan Baldini Direzione Tecnica

BOLLY® test report granted by "CORDIVARI LAB" according to EN-15332 related to Ecodesign ErP Directive 2009/125/CE.



CORDIVARI Lab

DESCRIZIONE DELL'OGGETTO IN PROVA	
Richiedente	--
Rivenditore	--
Costruttore	CORDIVARI
Procedura di campionamento	☒ Golden 2021 ☐Prototipo fornito dal cliente
Nome commerciale	BOLLY 1 ST WB 300
Codice commerciale	3105162321103
Numero di serie	--
Classificazione apparecchio secondo regolamento/i europeo/i	**Serbatoio per l'acqua calda**, *un dispositivo per immagazzinare acqua calda destinato a fini sanitari e/o di riscaldamento d'ambiente, ivi compresi eventuali additivi, privo di generatore di calore fatta eventualmente eccezione per uno o più elementi riscaldanti ausiliari a immersione.*
Temperatura massima di esercizio [°C]	**90**
Pressione massima di esercizio [bar]	**10**
Volume accumulo [l]	**281.83**
Diametro fasciame/esterno [mm]	**550/650**
Altezza fuori tutto [mm]	**1486**
Materiale membrature	**Acciaio al carbonio**
Trattamento anticorrosivo	**Polywarm**
Spessore coibentazione [mm]	**50 mm**
Materiale coibentazione	**Schiuma poliuretanica**
Finitura esterna	**PVC**

Rapporto N° **BO-CLEN 10.23** Pag. 4 di 6

BOLLY® test report granted by "CORDIVARI LAB" according to EN-15332 related to Ecodesign ErP Directive 2009/125/CE.

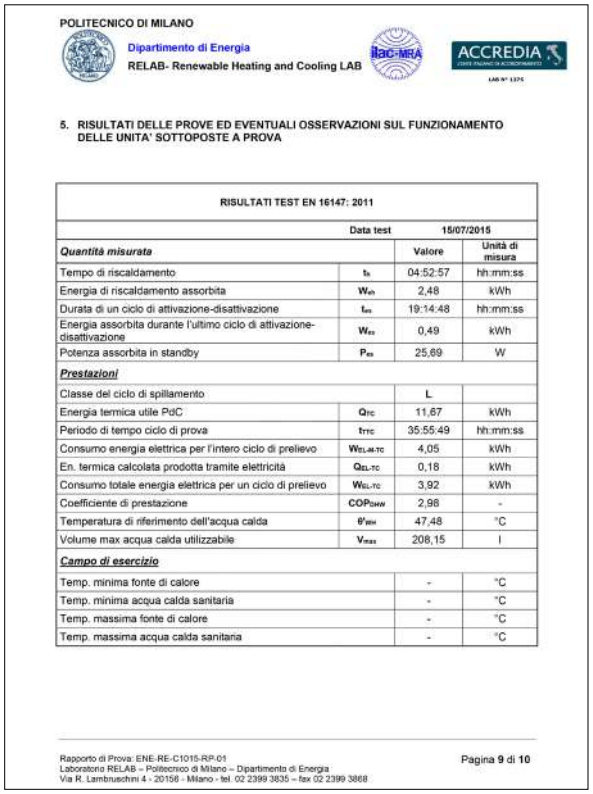

POLITECNICO DI MILANO
Dipartimento di Energia
RELAB- Renewable Heating and Cooling LAB

5. RISULTATI DELLE PROVE ED EVENTUALI OSSERVAZIONI SUL FUNZIONAMENTO DELLE UNITA' SOTTOPOSTE A PROVA

RISULTATI TEST EN 16147: 2011			
	Data test	15/07/2015	
Quantità misurata		**Valore**	**Unità di misura**
Tempo di riscaldamento	t_h	04:52:57	hh:mm:ss
Energia di riscaldamento assorbita	W_{eh}	2,48	kWh
Durata di un ciclo di attivazione-disattivazione	t_{ss}	19:14:48	hh:mm:ss
Energia assorbita durante l'ultimo ciclo di attivazione-disattivazione	W_{ss}	0,49	kWh
Potenza assorbita in standby	P_{es}	25,69	W
Prestazioni			
Classe del ciclo di spillamento		L	
Energia termica utile PdC	Q_{TC}	11,67	kWh
Periodo di tempo ciclo di prova	t_{TTC}	35:55:49	hh:mm:ss
Consumo energia elettrica per l'intero ciclo di prelievo	$W_{EL-M-TC}$	4,05	kWh
En. termica calcolata prodotta tramite elettricità	Q_{EL-TC}	0,18	kWh
Consumo totale energia elettrica per un ciclo di prelievo	W_{EL-TC}	3,92	kWh
Coefficiente di prestazione	COP_{DHW}	2,98	-
Temperatura di riferimento dell'acqua calda	θ'_{WH}	47,48	°C
Volume max acqua calda utilizzabile	V_{max}	208,15	l
Campo di esercizio			
Temp. minima fonte di calore		-	°C
Temp. minima acqua calda sanitaria		-	°C
Temp. massima fonte di calore		-	°C
Temp. massima acqua calda sanitaria		-	°C

Rapporto di Prova: ENE-RE-C1015-RP.01
Laboratorio RELAB – Politecnico di Milano – Dipartimento di Energia
Via R. Lambruschini 4 - 20156 - Milano - tel. 02 2399 3835 – fax 02 2399 3868

Pagina **9** di **10**

BOLLYTERM® HP calorifier with heat pump performance test granted by RELAB Energy Department (Politecnico of Milan) according to EN-16147 related to Ecodesign ErP Directive 2009/125/CE – EU Regulation 812/2013-814/2013.

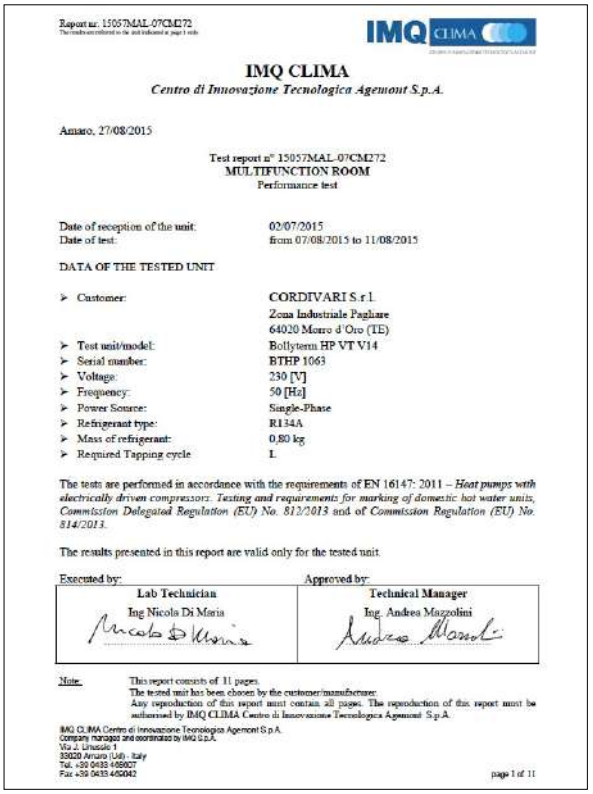

Report nr.: 15057MAL-07CM272

IMQ CLIMA

IMQ CLIMA
Centro di Innovazione Tecnologica Agemont S.p.A.

Amaro, 27/08/2015

Test report n° 15057MAL-07CM272
MULTIFUNCTION ROOM
Performance test

Date of reception of the unit: 02/07/2015
Date of test: from 07/08/2015 to 11/08/2015

DATA OF THE TESTED UNIT

- Customer: CORDIVARI S.r.l. Zona Industriale Pagliare 64020 Morro d'Oro (TE)
- Test unit/model: Bollyterm HP VT V14
- Serial number: BTHP 1063
- Voltage: 230 [V]
- Frequency: 50 [Hz]
- Power Source: Single-Phase
- Refrigerant type: R134A
- Mass of refrigerant: 0,80 kg
- Required Tapping cycle L

The tests are performed in accordance with the requirements of EN 16147: 2011 – *Heat pumps with electrically driven compressors. Testing and requirements for marking of domestic hot water units, Commission Delegated Regulation (EU) No. 812/2013* and of *Commission Regulation (EU) No. 814/2013.*

The results presented in this report are valid only for the tested unit.

Executed by:	Approved by:
Lab Technician	**Technical Manager**
Ing Nicola Di Maria	Ing. Andrea Mazzolini

Note: This report consists of 11 pages.
The tested unit has been chosen by the customer/manufacturer.
Any reproduction of this report must contain all pages. The reproduction of this report must be authorised by IMQ CLIMA Centro di Innovazione Tecnologica Agemont S.p.A.

IMQ CLIMA Centro di Innovazione Tecnologica Agemont S.p.A.
Company managed and coordinated by IMQ S.p.A.
Via J. Linussio 1
33020 Amaro (UD) - Italy
Tel. +39 0433 486007
Fax +39 0433 480042

page 1 of 11

BOLLYTHERM® HP calorifier with heat pump performance test granted by IMQ CLIMA (Centro di Innovazione Tecnologica Agemont) according to EN-16147 related to Ecodesign ErP Directive 2009/125/CE – EU Regulation 812/2013-814/2013.



Direttiva Attrezzature a Pressione
2014/68/UE – Modulo B
Pressure Equipment Directive
2014/68/EU – Module B

ACCREDIA
N° 0113 PRD

Esame UE del Tipo – Tipo di Produzione
EU Type examination – Production Type

Certificato n. *Certificate no.*	714-P-3406	Rev. *Rev.*	01
Attrezzatura *Equipment*	Serbatoio Autoclave – Famiglia RPC.204 VT	Categoria *Category*	II, III, IV vedi elenco modelli in allegato
Numero di fabbrica *Serial number*	P183803 (prototipo Mod. 3.000 l)	Disegno *Drawing*	PED_010_2019_2 Rev. 2 del 13/10/2023
Ps [bar]	0 / +8 bar; 0 / +11,76 bar; 0 / +12 bar	V [l]	fino a 10.000 l vedi elenco dei modelli in allegato tecnico
Ts [°C]	-10 / +50°C	Fluido *fluid*	Aria / Acqua Gruppo 2 – Liq + Gas
Fabbricante *Manufacturer*	CORDIVARI S.r.l.		
Sito produttivo *Production site*	Via Padova - Zona Industriale Pagliare - 64020 Morro D'Oro TE		
Verbale di verifica *Evaluation report*	Zona Industriale Vomano - 64020 Morro D'Oro TE		
	P0002305-8286889-R03; P0002305-8286889-R04	Numero pratica *Job number*	P0002305-8286889

ECO Certificazioni, Organismo Notificato N. 0714 in conformità all'art. 14 della Direttiva 2014/68/UE del Parlamento Europeo e del Consiglio del 15 maggio 2014, certifica che questo apparecchio/insieme verificato secondo la procedura di cui all'allegato III modulo B – Tipo di Produzione, è conforme ai requisiti essenziali di sicurezza, definiti nell'allegato I della Direttiva.
I requisiti essenziali di sicurezza sono assicurati dalla rispondenza alle norme tecniche applicate:

UN EN 13445-3:2021

Il fabbricante è impegnato ad informare ECO Certificazioni di tutte le modifiche al tipo approvato, che possono influire sulla conformità dell'attrezzatura a pressione ai requisiti essenziali di sicurezza o sulle condizioni di validità del certificato. Tali modifiche fanno decadere la validità del certificato e richiedono un'approvazione sotto forma di un supplemento al certificato.
La documentazione indicata nel presente Certificato è conservata dall'Organismo di Certificazione per 10 anni.
I regolamenti pubblicati sul sito web di ECO Certificazioni S.p.A. si applicano nella versione ivi disponibile.
Questo certificato, incluso l'allegato, può essere riprodotto solo integralmente e senza alcuna modifica.
In accordo con quanto previsto nell'Allegato III modulo B – Tipo di Produzione della Direttiva 2014/68/UE la marcatura CE sul prodotto deve essere seguita dal n. 0714 che identifica ECO Certificazioni come l'Organismo Notificato incaricato della verifica sull'apparecchio/insieme.

ECO Certification, Notified Body No. 0714 in accordance with Article 14 of the Directive 2014/68/EU of the European Parliament and the Council 15th May 2014, certifies that this equipment/assembly was tested according to the procedure set out in Annex III Module B – Production Type and complies with the essential safety requirements set out in the Annex I of the Directive.
The essential safety requirements are assured by compliance with applied technical standards:

UN EN 13445-3:2021

The manufacturer shall inform ECO Certifications of all changes to the approved type that may affect the conformity of the pressure equipment with the essential safety requirements or the conditions for validity of the certificate. Such changes will void the certificate and require an approval in the form of an addition to the original certificate.
The documents indicated in this Certificate are kept by the Certification Body for 10 years.
The regulations published in the web site of ECO Certifications S.p.A. apply in their current version.
This certificate, annex included, may only be reproduced in its entirety and without any change.
In accordance with the Annex III Module B – Production Type of Directive 2014/68/EU the CE marking must be followed by n. 0714 that identifies ECO Certifications as Notified Body responsible for equipment/assembly verification.

Marcatura *Marking* CE 0714 — Modulo *Module* B — Tipo di Produzione *Production Type*

Faenza, 30/01/2024

Direttore Generale
General Manager
Ing. Gualtiero Fabbri

ECO European Certifying Organization S.p.A. - via mengolina 33 - 48018 Faenza RA - Italy - info@ecocertificazioni.eu - www.eco-cert.it

CE Certificate (Module B) in compliance with Directive 2014/68/EU on Pressure Equipment, for air-cushion liquid storage tanks (autoclaves).



Direttiva Attrezzature a Pressione
2014/68/UE – Modulo B
Pressure Equipment Directive
2014/68/EU – Module B

ACCREDIA
N° 0113 PRD

Esame UE del Tipo – Tipo di Produzione
EU Type examination – Production Type

Certificato n. *Certificate no.*	714-P-3404	Rev. *Rev.*	00
Attrezzatura *Equipment*	Serbatoio per aria compressa – Famiglia RPC.203 VT	Categoria *Category*	II, III, IV vedi elenco modelli in allegato
Numero di fabbrica *Serial number*	P183801 (prototipo Mod. 5.000 l)	Disegno *Drawing*	PED_011_2019_2 Rev. 2 del 13/10/2023
Ps [bar]	0 / +8 bar; 0 / +10,67 bar; 0 / +11 bar; 0 / +12 bar; 0 / +15 bar	V [l]	fino a 10.000 l vedi elenco dei modelli in allegato tecnico
Ts [°C]	-10 / +100°C	Fluido *fluid*	Aria Gruppo 2 – Gas
Fabbricante *Manufacturer*	CORDIVARI S.r.l.		
Sito produttivo *Production site*	Via Padova - Zona Industriale Pagliare - 64020 Morro D'Oro TE		
Verbale di verifica *Evaluation report*	Zona Industriale Vomano - 64020 Morro D'Oro TE		
	P0002305-8197590-R03; P0002305-8197590-R04	Numero pratica *Job number*	P0002305-8197590

ECO Certificazioni, Organismo Notificato N. 0714 in conformità all'art. 14 della Direttiva 2014/68/UE del Parlamento Europeo e del Consiglio del 15 maggio 2014, certifica che questo apparecchio/insieme verificato secondo la procedura di cui all'allegato III modulo B – Tipo di Produzione, è conforme ai requisiti essenziali di salute e sicurezza, definiti nell'allegato I della Direttiva.
I requisiti essenziali di salute e sicurezza sono assicurati dalla rispondenza alle norme tecniche applicate:

UN EN 13445-3:2021

Il fabbricante è impegnato ad informare ECO Certificazioni di tutte le modifiche al tipo approvato, che possono influire sulla conformità dell'attrezzatura a pressione ai requisiti essenziali di sicurezza o sulle condizioni di validità del certificato. Tali modifiche fanno decadere la validità del certificato e richiedono un'approvazione sotto forma di un supplemento al certificato.
La documentazione indicata nel presente Certificato è conservata dall'Organismo di Certificazione per 10 anni.
I regolamenti pubblicati sul sito web di ECO Certificazioni S.p.A. si applicano nella versione ivi disponibile.
Questo certificato, incluso l'allegato, può essere riprodotto solo integralmente e senza alcuna modifica.
In accordo con quanto previsto nell'Allegato III modulo B – Tipo di Produzione della Direttiva 2014/68/UE la marcatura CE sul prodotto deve essere seguita dal n. 0714 che identifica ECO Certificazioni come l'Organismo Notificato incaricato della verifica sull'apparecchio/insieme.

ECO Certification, Notified Body No. 0714 in accordance with Article 14 of the Directive 2014/68/EU of the European Parliament and the Council 15th May 2014, certifies that this equipment/assembly was tested according to the procedure set out in Annex III Module B – Production Type and complies with the essential health and safety requirements set out in the Annex I of the Directive.
The essential health and safety requirements are assured by compliance with applied technical standards:

UN EN 13445-3:2021

The manufacturer shall inform ECO Certifications of all changes to the approved type that may affect the conformity of the pressure equipment with the essential safety requirements or the conditions for validity of the certificate. Such changes will void the certificate and require an approval in the form of an addition to the original certificate.
The documents indicated in this Certificate are kept by the Certification Body for 10 years.
The regulations published in the web site of ECO Certifications S.p.A. apply in their current version.
This certificate, annex included, may only be reproduced in its entirety and without any change.
In accordance with the Annex III Module B – Production Type of Directive 2014/68/EU the CE marking must be followed by n. 0714 that identifies ECO Certifications as Notified Body responsible for equipment/assembly verification.

Marcatura *Marking* CE 0714 — Modulo *Module* B — Tipo di Produzione *Production Type*

Forlì, 30/01/2024

Direttore Generale
General Manager
Ing. Gualtiero Fabbri

ECO - European Certifying Organization S.p.A. - via Mengolina 33 - 48018 Faenza RA - Italy - info@eco-cert.it - www.eco-cert.it

CE Certificate (Module B) in compliance with Directive 2014/68/EU on Pressure Equipment, for pressure vessels (compressed air receivers).

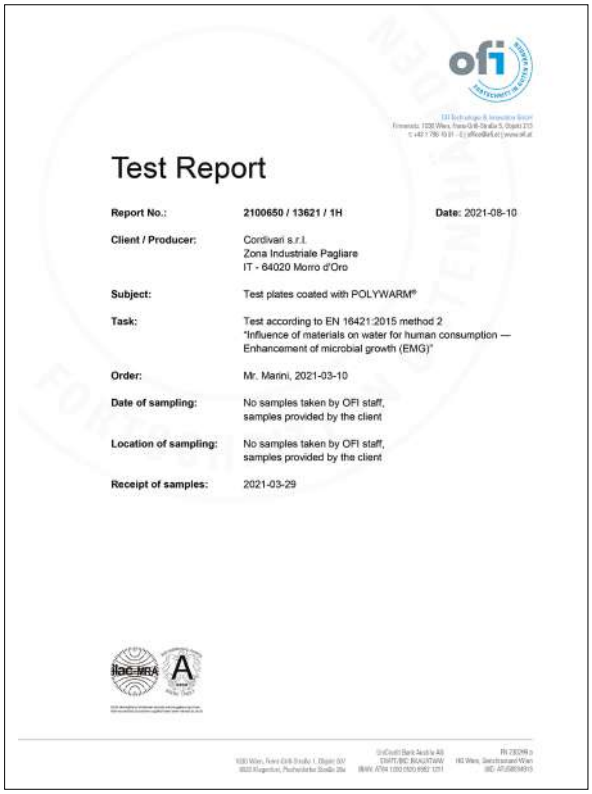

Test Report

Report No.:	**2100650 / 13621 / 1H** — **Date:** 2021-08-10
Client / Producer:	Cordivari s.r.l. Zona Industriale Pagliare IT - 64020 Morro d'Oro
Subject:	Test plates coated with POLYWARM®
Task:	Test according to EN 16421:2015 method 2 "Influence of materials on water for human consumption — Enhancement of microbial growth (EMG)"
Order:	Mr. Marini, 2021-03-10
Date of sampling:	No samples taken by OFI staff, samples provided by the client
Location of sampling:	No samples taken by OFI staff, samples provided by the client
Receipt of samples:	2021-03-29

Certificate of Conformity for Polywarm® according to EN 16421.

OVERPRESSURE PROTECTION
If the domestic hot water system exceeds the permissible pressure limits of the installed storage tank, install a pressure reducing valve as far away from the storage tank as possible.

Cordivari tanks and heat exchangers are manufactured in accordance with Article 4.3 of Directive 2014/68/EU (PED) and are therefore not subject to CE marking nor to the related requirements applicable to pressure equipment.
For further information on the operating limits in accordance with Article 4.3 of the PED 2014/68/EU, please refer to the FAQs on the website www.cordivari.it.

Storage tanks with a primary circuit with a maximum operating temperature of 110 °C
In order to prevent pressure fluctuations from damaging the product, it is always necessary to provide an expansion system in accordance with Raccolta R, edition 2009, chapter R.1.A.
The expansion system may consist simply of a relief valve, either counterweight-type or spring-loaded, with an orifice diameter in millimetres not less than:

$$D\ min = \sqrt{(V/5)}$$

where V is the volume of the storage tank expressed in litres, with a minimum diameter of 15 mm.
The relief valve shall be set to a pressure not exceeding the maximum operating pressure of the storage tank and shall be connected without any shut-off devices.
In addition to the relief valve, it is nevertheless recommended, also to avoid frequent valve openings, to install a closed-type expansion vessel with non-toxic diaphragm membrane.

- **Storage tanks with heat exchangers with a maximum operating temperature above 110 °C (steam or superheated water)**

The provisions applicable to such systems are contained in Chapter R.3.D of Raccolta R, edition 2009.
Furthermore, for water heaters in which the primary circuit temperature exceeds the boiling temperature of the secondary fluid at a pressure of 0.5 bar, protective devices are mandatory (such as thermostats, pressure switches and minimum level/pressure protection).
With regard to the primary circuit (storage tank heat exchangers), the regulations in force for pressure equipment apply.
For provisions relating to systems with heat exchangers supplied on the primary side with fluids at temperatures above 110 °C, whether open or closed expansion systems, including the required safety, control and protection devices, refer to Chapter R.3.D of Raccolta R, edition 2009.

- **Use of storage tanks in solar thermal systems**

Comply with the provisions contained in Chapter R.3.H of Raccolta R, edition 2009 and, for storage tanks not CE-PED certified, ensure that:
- the temperature of the primary circuit never exceeds 140 °C (which may be reached only for limited periods of time);
- the maximum operating pressure complies with the following limitation:
- the product of pressure × heat exchanger volume shall not exceed 50 bar per litre, i.e.:

$$P \times V \leqslant 50\ [bar \times litro]$$

Given the volume of fluid contained in the heat exchanger, it is therefore possible to calculate, using the above formula, the maximum allowable operating pressure for each heat exchanger.
- the surface area of the solar collectors does not exceed 50 m², and in any case the total useful output is below 35 kW.

Above these limits, the heat exchanger (as well as the system) is subject to the provisions applicable to pressure equipment (design, system and in-service inspections, periodic requalification, etc.); therefore, heat exchangers designed and tested in accordance with Directive 2014/68/EU – Pressure Equipment must be used.

PROTECTION AGAINST CORROSION
To ensure effective protection against electrochemical corrosion, also for warranty purposes, the supplied cathodic protection system must always be installed and electrically connected.
Cordivari Srl supplies a magnesium anode as standard, allowing verification of the actual consumption of the magnesium rod by means of the Anode Tester device (where provided).
An electronic anode is also available as an accessory; once installed, due to its characteristics, it does not require replacement. With this type of anode, effective protection requires that the power supply is always active.
For proper protection, also for warranty validity, the water used must not exceed the guideline values established by DPR 236/88 and UNI CTI 8065.
Furthermore, to prevent stray galvanic currents, it is always necessary to provide a PROPER EARTHING SYSTEM for the installations.

PROTECTION AGAINST LEGIONELLA BACTERIA
Legionella bacteria thrive and multiply at temperatures between 30 °C and 45 °C.
A simple and effective method to combat this bacterium is to heat all stored water to a temperature of at least 60 °C and ensure that, at every point of the system, the water temperature is above 50 °C.

STORAGE TANKS AND THERMAL BUFFER TANKS
They must always be installed sheltered from weather exposure, on a base of adequate strength.
Before making connections, verify that sufficient space is available for the removal of the heat exchanger, magnesium anode, any heating element and other technical components specific to the various products, as well as for easy opening of any inspection covers.
Ensure that the rooms intended to house the equipment are provided with sufficiently large openings to allow passage of the units according to their overall dimensions, without the need for demolition during installation or removal.
For all storage tanks and thermal buffer tanks equipped with plate heat exchangers, the hardness of the incoming domestic water must be below 30 °f (French degrees).
Installation of the storage tank/thermal buffer tank must always include suitable and adequate drainage for any possible water leakage.

AUTOCLAVE TANKS
These products are manufactured in compliance with Directive 2014/68/EU – Pressure Equipment and must be installed in accordance with the provisions of Raccolta E.
Among other requirements, the installation of appropriate safety and control accessories is mandatory, and beyond certain pressure and volume limits, initial inspection and periodic inspections by authorized bodies are required.
It is also recommended to use these devices only under the conditions (pressure, temperature, contained fluid) for which they were designed, otherwise non-conformities may arise during the initial inspection.
Installation of the tank must always include suitable and adequate drainage for any water leakage.
Ensure that the rooms intended to house the equipment are provided with sufficiently large openings to allow passage of the unit according to its overall dimensions, without the need for demolition during installation or removal.

CHILLED WATER STORAGE TANKS AND INERTIAL THERMAL BUFFER
Do not use the tank for mobile installations or transport.
Always install the tank perfectly level.
Always provide earthing for the flywheel/storage tank.
If the vessel is to be installed in enclosed rooms, a preliminary pressure test must be carried out.
Ensure that the rooms intended to house the equipment are provided with sufficiently large openings to allow passage of the unit according to its overall dimensions, without the need for demolition during installation or removal.
Installation of the tank must always include suitable and adequate drainage for any water leakage.

SC STORAGE TANKS
For stainless steel tanks, the composition of the water contained in the tank must not exceed the guideline values established by DPR 236/88.
Never use iron or galvanized fittings on stainless steel tanks.
Ensure that the rooms intended to house the equipment are provided with sufficiently large openings to allow passage of the unit according to its overall dimensions, without the need for demolition during installation or removal.
Do not use the tank for non-fixed installations or transport.
Always install the tank perfectly level and provide earthing.
If the vessel is to be installed in enclosed rooms, a preliminary pressure test must be carried out.
Installation of the tank must always include suitable and adequate drainage for any water leakage.

CORDIVARI®

DATE:	
REFERENCE PERSON:	

TYPE OF PRODUCT	☐ DHW TANK	☐ COMPRESSED AIR	☐ CHILLED WATER	☐ COMBI
	☐ AUTOCLAVE	☐ VASO INERZIALE	☐ VOLANO TERMICO	☐ PUFFER
	☐ ECOCOMBI	☐ VASO STORAGE	☐ PRESSURE TANK S/C	☐ INTERKA

PRODUCT DESCRIPTION	

SPACE FOR DRAWING IN ABSENCE OF TECHNICAL SCHEME

☐ PLEASE ENCLOSE TECHNICAL DRAWING/LAYOUT

TECHNICAL DETAILS		
VOLUME (lt)		
DIAMETER (mm)		
HEIGHT (mm)		
VERTICAL		
HORIZONTAL		
GALVANIZED		
POLYWARM		
PAINTED		
STAINLESS STEEL 304		
STAINLESS STEEL 316		
WORKING PRESSURE	TEMPERATURE	
PRIMARY CIRCUIT FLUID	PRESSURE	
SECONDARY CIRCUIT FLUID	PRESSURE	

QUANTITY

INSULATION

NOTE

©COPYRIGHT: This form cannot not be forwarded of reproduced without written authorization issued by Cordivari Srl

SEND TO THE ATTENTION OF SALES DEPARTMENT

GENERAL SALES CONDITIONS AND WARRANTY

Sales of Cordivari products are made in accordance with the General Conditions of Sale and Warranty listed below. Any exception to these conditions is subject to written acceptance by Cordivari Srl.

1. SHIPPING
The goods travel at the Customer's risk and peril, even if they are shipped carriage paid. The goods must be checked upon delivery in the presence of the carrier, checking the integrity of the packaging, missing items, or replacements. Any dispute must be reported immediately to the carrier / courier by signing the transport document with reserve and communicate any discrepancy by registered letter or certified email within eight days from receipt of the goods.

2. TERMS OF DELIVERY
The delivery terms are purely indicative and, in any case, if the delivery deadline could not be met for any reason, the Client will not be entitled to claim any compensation, payment of penalties, cancellation or modification of the order given to us. In the case of extraordinary events such as natural disasters, strikes, lack of raw materials, and causes of force majeure, Cordivari Srl reserves the right to choose the measures to be adopted. If the ordered goods are not collected within the agreed period, they will be invoiced and stored with costs, risk and danger borne by the Customer.

3. WEIGHTS, MEASURES, SURFACES
Weights, measurements, surfaces, shapes, dimensions, images and other data are indicative and not binding and may be subject to modifications or variations that Cordivari Srl reserves the right to make to its products without prior notice.

4. CANCELLATION OR ORDER CHANGES
Without the written consent of Cordivari Srl, the orders placed cannot be canceled or modified neither partially nor totally. No variations or modifications are possible when the order has already been processed. Any costs arising from the cancellation or modification of the order will be invoiced to the Client.

5. WARRANTY
- Cordivari Srl warrants 5 years for all tanks in stainless steel 316 L.
- Cordivari warrants 2 years for the Bolly® PRIMO calorifiers.
- Cordivari Srl warrants 5 years for all calorifiers with internal anti-corrosion treatment in Polywarm®.
- Cordivari Srl warrants 2 years for all containers with anti-corrosive hot galvanizing treatment.
- For all removable and plate heat exchangers (inspectable and brazed), both mounted on the calorifiers and sold individually, Cordivari Srl warrants 2 years.
- Cordivari Srl warrants 5 years for all PUFFER and COMBINED THERMAL STORAGE.
- Cordivari Srl warrants 2 years for accessories and residual items in this catalog not covered by the general conditions of sale, with the exception of technical, electrical and electronic components, where the warranty is 12 months.
- For all non-standard items, special products made to customer specifications, Cordivari Srl warrants 2 years.
- The products and systems in this catalog are designed and manufactured in compliance with the reference directives CE-EN-UNI-and PED.
- The warranty and conformity of said products and systems are valid only in those countries where such standards are recognized and implemented. In non-European countries or in any case in countries that do not implement these regulations, Cordivari assumes no responsibility for warranty and compliance.
- The warranty covers manufacturing defects, if all the points of Article 5 are respected. It must be proven that the installation of the products has complied with the criteria of protection from overpressure, corrosion, legionella and installation and use rules and requirements described in this catalog and any applicable plant engineering standards. In domestic hot water production systems, as well as in heating ones, for the purposes of the warranty, comply with the provisions of the UNI CTI 8065 standard which provides for various types of water treatments according to its characteristics. The warranty does not cover damage deriving from non-compliance with the requirements of the UNI CTI 8065 standard.

The commitment to lend the warranty exists provided that:
- The product has been stored in good condition and protected from bad weather before installation;
- The product has not been damaged during transport, handling or installation;;
- No tampering or repairs have been carried out by persons not authorized by Cordivari Srl;
- The installation has been carried out by authorized personnel, in compliance with the instructions and standards indicated on the technical documentation provided by Cordivari Srl, and in compliance with all provisions of laws and prescriptions contained in this catalog;
- The accessories used are those regularly supplied by Cordivari Srl;
- The buyer has settled the balance of the payments within the established terms;
- No aggressive chemicals have been added to the water;
- The operating pressure and temperature indicated in the catalog correspond to the operating pressure and temperature limit of use.

Those parts subject to natural wear and tear are always excluded from any warranty (eg anodes, gaskets, bolts, etc.).
The warranty starts from the date of the sales invoice of Cordivari Srl and is not renewed in any case in the event of a replacement of the product.
The warranty does not cover costs due to demolitions, works for the passage of products both inbound and outbound, and labor for any product replacements.
Cordivari Srl undertakes during the warranty period to replace the returned product recognized as defective due to ascertained production defects, in addition to this, the Customer cannot claim any other compensation - deriving from said defects - for direct or indirect damage costs of any kind to people and / or things.

6. PAYMENTS
The payments of the invoices relating to the supplies must be settled within the established deadlines. The delay in the payment of invoices, even if partial, gives rise to the start of interest on arrears at the current rate, in addition to the immediate suspension of shipments in progress and the processing of any orders.

7. RESERVE OF OWNERSHIP
The products remain the property of Cordivari Srl until the payment of the last installment of the price of the goods delivered. In the event of even partial non-fulfillment by the buyer, Cordivari Srl may request the immediate return of the goods while retaining the installments paid by way of indemnity, except for greater damage.

8. PRICES
Prices are not binding and can be changed without notice. Prices can be revised according to the changes that may occur up to the time of delivery.
The prices are intended ex works in Morro D'Oro (TE), unless otherwise agreed.
Prices are always shown in the price list net of VAT.
For bulky models, Cordivari Srl reserves the right to ask for a share in the costs of packaging and transport.

9. ORDERS / DELIVERY
The orders given definitively bind the Client who must declare to know and accept all the conditions of sale. In the event that the Client draws up the order by name or on behalf of others, signing the order undertakes jointly and severally to fulfill what it has been agreed. Delivery is intended exclusively at the headquarters / warehouse of the Customer. Particular requests of the Client such as: express deliveries, delivery other than the headquarters / warehouse, etc. will have additional costs that will be communicated from time to time to our sales department.

10. COURT AUTHORITY AND APPLICABLE LAW
For the following Catalogue and conditions only the provisions of Italian law will be used. For controversy, the Court of Teramo (Italy) shall have exclusive competence. Essential and trial law shall be exclusively Italian.

11. ORIGINAL VERSION
Translation of Cordivari General Sales Conditions and Warranty Terms, reported in this page, derives from the Italian version. In case of possible controversy, the official Cordivari General Sales Conditions and Warranty Terms are the one reported in the Italian language, stated at the back of the Italian catalogs.

© Copyright Cordivari Srl
All rights are reserved, in particular those of reproduction, dissemination and translation . No part of this work may be reprinted or reproduced in any other form without the written authorization of Cordivari. This catalog replaces and cancels all previous editions. The company reserves the right to modify the products and data shown in the catalog at any time and is not liable for any typographical errors. The product sheets and catalogs shown on the company website are always updated to the latest version.

CONDIZIONI GENERALI DI VENDITA E GARANZIA

Le vendite dei prodotti della Cordivari Srl sono effettuate conformemente alle sotto elencate Condizioni Generali di Vendita e Garanzia. Ogni deroga a queste condizioni è subordinata all'accettazione scritta da parte della Cordivari Srl.

1. SPEDIZIONE
La merce viaggia a rischio e pericolo del Committente, anche se viene spedita franco destino. La merce deve essere verificata all'atto della CONSEGNA, controllando l'integrità dell'imballo, articoli mancanti o sostituzioni in presenza del trasportatore. Ogni contestazione dovrà essere segnalata immediatamente al trasportatore/ corriere firmando con riserva il DDT e confermando tale riserva a mezzo lettera raccomandata o posta certificata entro otto giorni dal ricevimento merce.

2. TERMINI DI CONSEGNA
I termini di consegna si intendono puramente indicativi e comunque se il termine di consegna non potesse essere rispettato per qualsiasi motivo, il Committente non avrà diritto a esigere alcun indennizzo, pagamento di penali, annullamento o modifica all'ordine conferitoci. In caso di eventi straordinari quali calamità naturali, scioperi, mancanza di materie prime, e cause di forza maggiore, la Cordivari Srl si riserva la scelta delle misure da adottare. Se la merce ordinata non viene ritirata nel periodo concordato, questa verrà fatturata e immagazzinata con costi, rischio e pericolo a carico del Committente.

3. PESI, MISURE, SUPERFICI
Pesi, misure, superfici, forme, dimensioni, immagini e altri dati sono indicativi e non impegnativi e possono subire delle modifiche o variazioni che la Cordivari Srl si riserva di apportare ai suoi prodotti senza preavviso.

4. ANNULLAMENTO O MODIFICHE ORDINE
Senza il consenso scritto della Cordivari Srl, le ordinazioni conferite non possono essere né parzialmente né totalmente annullate o modificate. Non si accordano variazioni o modifiche quando è già stata intrapresa la lavorazione. Eventuali spese derivanti dall'annullamento o modifica dell'ordine saranno fatturate al Committente

5. GARANZIA
- Per tutti i bollitori in acciaio inox 316 L la Cordivari Srl garantisce anni 5.
- Per i bollitori della serie Bolly® PRIMO la Cordivari garantisce 2 anni.
- Per tutti i bollitori con trattamento anticorrosivo interno in Polywarm® la Cordivari Srl garantisce anni 5.
- Per tutti recipienti con trattamento anticorrosivo di zincatura a caldo la Cordivari Srl garantisce anni 2.
- Per tutti gli scambiatori di calore estraibili e a piastre (ispezionabili e saldobrasati), sia montati sui bollitori sia venduti singolarmente la Cordivari Srl garantisce anni 2.
- Per tutti i termoaccumulatori PUFFER e TERMOACCUMULATORI COMBINATI la Cordivari Srl garantisce anni 5 .
- Per gli accessori e per gli articoli residuali del presente catalogo non contemplati nelle condizioni generali di vendita la Cordivari Srl garantisce anni 2 ad eccezione di componenti tecnici, elettrici ed elettronici, dove la garanzia è di 12 mesi.
- Per tutti gli articoli fuori standard, i prodotti speciali realizzati su specifica del Cliente, la Cordivari Srl garantisce anni 2.
- I prodotti ed i sistemi presenti in questo catalogo sono progettati e realizzati in conformità alle direttive di riferimento CE-EN-UNI-e PED.
- La garanzia e la conformità di detti prodotti e sistemi hanno valenza esclusivamente in quei paesi dove tali norme sono riconosciute e recepite. In paesi extra-europei o comunque in paesi che non recepiscono tali norme la Cordivari non assume responsabilità per garanzia e conformità.
- La garanzia copre i difetti di fabbricazione. Essa decade se non vengono rispettati i punti dell'art.5. Sussiste a condizione che l'installazione dei prodotti abbia rispettato i criteri della protezione dalla sovrappressione, corrosione, legionella e norme e prescrizioni di installazione e utilizzo descritte nel presente catalogo e tutte le eventuali norme in materia impiantistica. Negli impianti di produzione di acqua calda sanitaria, così come in quelli di riscaldamento, attenersi, ai fini della garanzia, a quanto disposto dalla norma UNI CTI 8065 che prevede vari tipi di trattamenti dell'acqua in funzione delle sue caratteristiche. La garanzia non copre danni derivanti da inadempienze alle prescrizioni della norma UNI CTI 8065.

L'impegno di prestare la garanzia sussiste a condizione che:
- Il prodotto sia stato immagazzinato in buone condizioni e al riparo dalle intemperie prima dell'installazione;
- Il prodotto non abbia subito danneggiamenti durante il trasporto, le movimentazioni o l'installazione;
- Non siano state compiute manomissioni o riparazioni da persone non autorizzate dalla Cordivari Srl;
- L'installazione sia stata realizzata da personale autorizzato, in conformità alle istruzioni e alle norme indicate sulla documentazione tecnica fornita dalla Cordivari Srl e alle norme e prescrizioni di installazione e utilizzo riportate nel presente catalogo e che siano state rispettate eventuali disposizioni di leggi o norme tecniche specifiche;
- Gli accessori utilizzati siano quelli regolarmente forniti dalla Cordivari Srl;
- Il compratore abbia effettuato il saldo dei pagamenti nei termini prestabiliti;
- Non siano state eseguite aggiunte di sostanze chimiche aggressive all'acqua;
- La pressione e la temperatura di esercizio indicate sul catalogo corrispondano alla pressione e alla temperatura limite di utilizzo.

Sono esclusi sempre da qualsiasi garanzia quei particolari soggetti a naturale usura (es. anodi, guarnizioni, bulloni ecc.).
La garanzia decorre dalla data della fattura di vendita della Cordivari Srl e non si rinnova in alcun caso nell'eventualità di una sostituzione del prodotto.
La garanzia non copre costi dovuti a demolizioni, lavori per il passaggio dei prodotti sia in ingresso che in uscita e la manodopera per eventuali sostituzioni di prodotto.
Cordivari Srl si impegna durante il periodo di garanzia alla sostituzione del prodotto reso riconosciuto difettoso per accertati difetti di produzione, oltre a ciò il Committente non potrà vantare alcun altro risarcimento per spese di danno, diretti o indiretti di qualsiasi natura a persone e/o a cose derivanti da detti difetti.

6. PAGAMENTI
I pagamenti delle fatture relative alle forniture dovranno essere effettuati entro i termini di scadenza stabiliti. Il ritardo nel pagamento delle fatture, anche se parziale, dà luogo alla decorrenza degli interessi di mora nella misura del tasso corrente, oltre alla sospensione immediata delle spedizioni in corso e del processamento di eventuali ordini.

7. RISERVA DI PROPRIETÀ
I prodotti restano di proprietà della Cordivari Srl fino al pagamento dell'l'ultima rata di prezzo di merce consegnata. In caso di inadempimento anche parziale del compratore la Cordivari Srl potrà chiedere l'immediata restituzione della merce trattenendo comunque le rate pagate a titolo di indennità salvo il maggior danno.

8. PREZZI
I prezzi non sono impegnativi e possono essere modificati senza preavviso. I prezzi sono revisionabili in funzione delle variazioni che dovessero intervenire fino al momento della consegna.
I prezzi si intendono resa franco stabilimento di Morro D'Oro (TE), salvo diversi accordi.
I prezzi sono sempre riportati nel listino al netto di IVA.
Per modelli ingombranti la Cordivari Srl si riserva di chiedere una partecipazione alle spese di imballaggio e trasporto.

9. ORDINI/CONSEGNA
Per gli ordini con consegna unica con valore imponibile di minimo Euro 1000, la spedizione è esente da contribuiti di trasporto; per ordini di valore inferiori alla somma di Euro 1.000, e/o richiesta di spedizione parziale il cui valore è inferiore alla somma di Euro 1000, il contributo è del 6% con addebito minimo di Euro 25,00 per ogni singola spedizione. Gli ordini impartiti impegnano definitivamente il Committente che deve dichiarare di conoscere e accettare tutte le condizioni di vendita. Nel caso in cui il Committente rediga l'ordine per nome e per conto e in nome di altri, con la firma dell'ordine si impegna in solido all'adempimento di quanto da egli convenuto. La consegna si intende esclusivamente presso la sede/magazzino del Committente. Richieste particolari del Committente come: consegne espresso, consegna diversa dalla sede/magazzino, etc. avranno costi addizionali che verranno comunicati di volta in volta al nostro ufficio commerciale.

10. FORO COMPETENTE
Foro Competente. Per qualsiasi controversia derivante dal presente contratto o collegata allo stesso è competente il Foro di Teramo.

© Copyright Cordivari Srl
Tutti i diritti, in particolare quelli di riproduzione, diffusione e traduzione sono riservati. Nessuna parte di questa opera può essere ristampata o riprodotta in qualsiasi altra forma senza l'autorizzazione scritta della Cordivari. Il presente catalogo sostituisce ed annulla tutte le edizioni precedenti. La società si riserva la facoltà di modificare in qualsiasi momento i prodotti e i dati riportati a catalogo e non risponde degli eventuali errori tipografici. Le schede prodotto e i cataloghi riportati sul sito web aziendale sono sempre aggiornate all'ultima versione.

ALPHABETICAL INDEX

	Model		page nr.
A	ACQUAMAS® 1		80
	ACQUAMAS® 2		84
	ACQUAMAS® 3 CTS®		88
B	BOLLY® 1 AP		26
	BOLLY® 1 AP INOX		230
	BOLLY® 1 HY XL		46
	BOLLY® 1 HY XL INOX		250
	BOLLY® 1 PDC		60
	BOLLY® 1 ST FB		16
	BOLLY® 1 ST INOX		220
	BOLLY® 1 XL		34
	BOLLY® 1 XL INOX		240
	BOLLY® 2 AP		30
	BOLLY® 2 AP INOX		234
	BOLLY® 2 HY DUO SOLAR		56
	BOLLY® 2 HY XL		50
	BOLLY® 2 HY XL INOX		254
	BOLLY® 2 HY XL R	NEW	54
	BOLLY® 2 PDC		62
	BOLLY® 2 ST FB		20
	BOLLY® 2 ST INOX		224
	BOLLY® 2 XL		38
	BOLLY® 2 XL INOX		244
	BOLLY® 2 XL R	NEW	44
	BOLLY® 3 PDC		64
	BOLLY® MURALE		68
	BOLLY® PRIMO		70
	BOLLYTERM® HOME R290	NEW	124
	BOLLYTERM® HP 1 NET		120
	BOLLYTERM® HP 2 NET		122
	BOLLYTERM® HP NET		118
C	CHILLED WATER STORAGE TANK GC/ZC OR		396
	CHILLED WATER STORAGE TANK GC/ZC VT		394
	CHILLED WATER STORAGE TANK ZBL		392
	COMBI 1		324
	COMBI 2		326
	COMBI 3		328
	COMPRESSED AIR RECEIVERS P.E.D. OR		424
	COMPRESSED AIR RECEIVERS P.E.D. VT		420
	COMPRESSED AIR RECEIVERS P.E.D. VT 11-15 BAR		422
	COMPRESSED AIR RECEIVERS SPVS		418
E	ECO COMBI 1 PDC		104
	ECO COMBI 1 PDC HY		112
	ECO COMBI 3 PDC		106
	ECO COMBI 3 PDC HY		114
	ECO-COMBI 1		332
	ECO-COMBI 1 DOMUS		340
	ECO-COMBI 2		334
	ECO-COMBI 2 DOMUS		342
	ECO-COMBI 3		336
	EXPANSION VESSEL-MEMBRANE GALVANIZED PED 24 LT		414
	EXPANSION VESSEL-MEMBRANE PAINTED PED 24 LT		412
	EXPANSION VESSELS-MEMBRANE GALVANIZED PED OR		415
	EXPANSION VESSELS-MEMBRANE GALVANIZED PED VT		414
	EXPANSION VESSELS-MEMBRANE PAINTED PED OR		413
	EXPANSION VESSELS-MEMBRANE PAINTED PED VT		412
	EXTRA 1 COMPACT		134
	EXTRA 1 HORIZONTAL		152
	EXTRA 1 INOX		192
	EXTRA 1 INOX COMPACT		196
	EXTRA 1 INOX STEAM		210
	EXTRA 1 PLUS		158
	EXTRA 1 STEAM		154
	EXTRA 1 WX		130
	EXTRA 2 INOX		200
	EXTRA 2 INOX COMPACT		206
	EXTRA 2 PLUS		162
	EXTRA 2 STEAM		156
	EXTRA 2 WX		138
	EXTRA 3 PLUS		166
	EXTRA 3 WX		144
F	FRESH WATER MODULE MACS®		294
	FRESH WATER MODULE MACS® CASCADE SETUP		296
	FRESH WATER STATION PRS		298
H	HEAT EXCHANGERS PHC		264
	HEAT EXCHANGERS SLB (BRAZED)		280
I	INTERKA		74
	INTERKA PANAREA		76
P	PIASTRATERM® MODULE	NEW	288
	PRESSURE VESSEL GALVANIZED Z PED OR		404
	PRESSURE VESSEL GALVANIZED Z PED VT		402
	PRESSURE VESSELSTAINLESS STEEL 316L X PED VT		406
	PUFFER 1		316
	PUFFER 1 CTS®		322
	PUFFER 2		318
	PUFFER 3/6 bar		308
	PUFFER COMPACT		312
	PUFFER FLANGED CONNECTIONS		314
	PUFFER PRIMARIO 4/7 bar		310
	PUFFERMAS® 1		344
	PUFFERMAS® 1 DOMUS		98
	PUFFERMAS® 1 PDC		92
	PUFFERMAS® 2		346
	PUFFERMAS® 2 CTS		350
	PUFFERMAS® 2 CTS POWER		354
	PUFFERMAS® 2 DOMUS		100
	PUFFERMAS® 3		348
	PUFFERMAS® 3 CTS		352
	PUFFERMAS® 3 CTS PDC		94
	PUFFERMAS® 3 CTS POWER		356
S	STORAGE TANK GALVANIZED Z SC OR		409
	STORAGE TANK GALVANIZED Z SC VT		408
	STORAGE TANK STAINLESS STEEL X SC VT		410
V	VASO INERZIALE		172
	VASO INERZIALE A1 W		176
	VASO INERZIALE INOX		212
	VASO INERZIALE INOX M1	NEW	214
	VASO INERZIALE M1	NEW	174
	VASO STORAGE 1		178
	VASO STORAGE 2		180
	VASO STORAGE 3		182
	VASO STORAGE COMPACT		184
	VASO STORAGE INOX A1		216
	VASO STORAGE INOX COMPACT		218
	VOLANO 30 TOP - MILD STEEL / STAINLESS STEEL	NEW	370
	VOLANO BS - MILD STEEL		374
	VOLANO BS - POLYWARM®	NEW	376
	VOLANO BS COOLING-HEATING		386
	VOLANO BS COOLING-HEATING - INOX		390
	VOLANO BS COOLING-HEATING - POLYWARM®		388
	VOLANO BS HOT/COLD - MILD STEEL		378
	VOLANO BS REVERSO		384
	VOLANO BS REVERSO FLANGED	NEW	382
	VOLANO BS REVERSO FLANGED INDOOR	NEW	380
	VOLANO CUBE		372
	VOLANO UP - MILD STEEL		364
	VOLANO UP - POLYWARM®		366
	VOLANO UP - STAINLESS STEEL		368

05/2026

CORDIVARI®

FOLLOW US

www.cordivari.com

CORDIVARI SRL
Zona Ind. Pagliare 64020 Morro D'Oro (TE) Italy · cordivari.com · Tel. +39 085 80401 Fax +39 085 8040273
C.F.-P.IVA-VAT Id nr. IT00735570673 · REA TE Nr.92310 · Cap. Sociale € 10.000.000,00 i.v. · UNI EN ISO 9001 · 14001 · 45001